wayfair

Assembly Instruction

Convertible Sleeper Chair with Charging Ports

Note: Do not use power tools for assembly. Power tools increase the risk of over tightening which leads to splitting or cracking the wood.

COMPONENT LIST

No	Drawing	Description	Qty
A	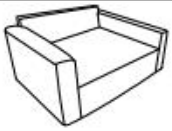	SEAT	1 PC
B	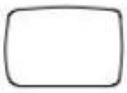	BACK CUSHION	1 PC
C		PILLOW (21"x13")	1 PC
D		PLASTIC LEG (ø5cm x H5cm)	6 PCS
E		WASHER (ø5cm)	6 PCS
F		ADAPTER	1 PC

STEP 1.

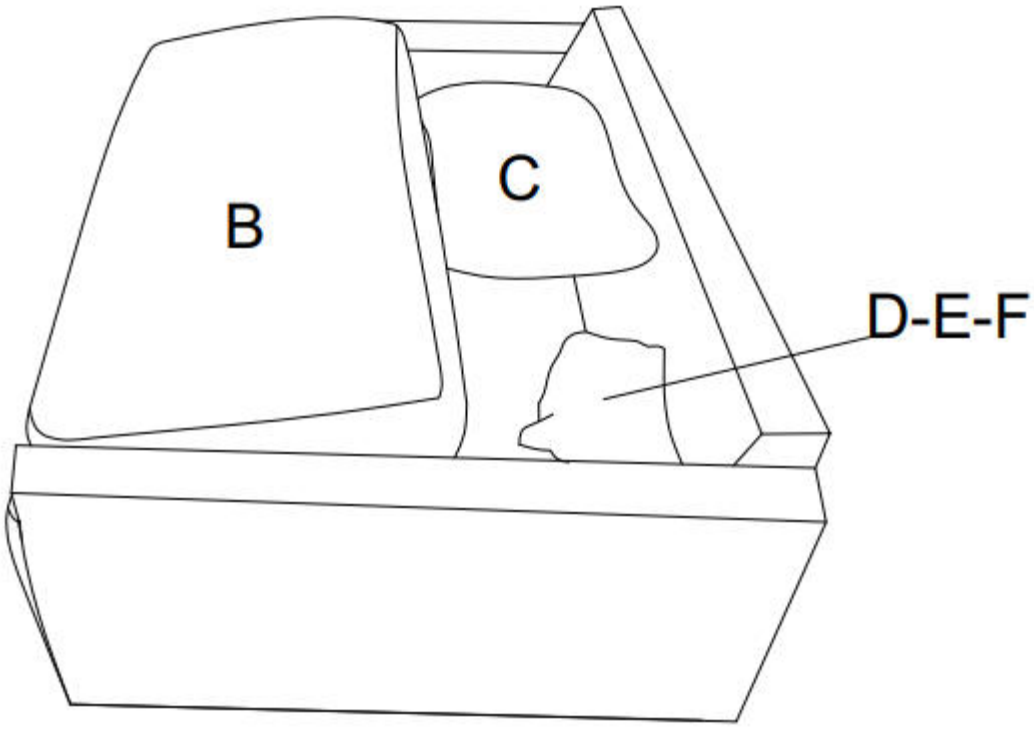

STEP 2.

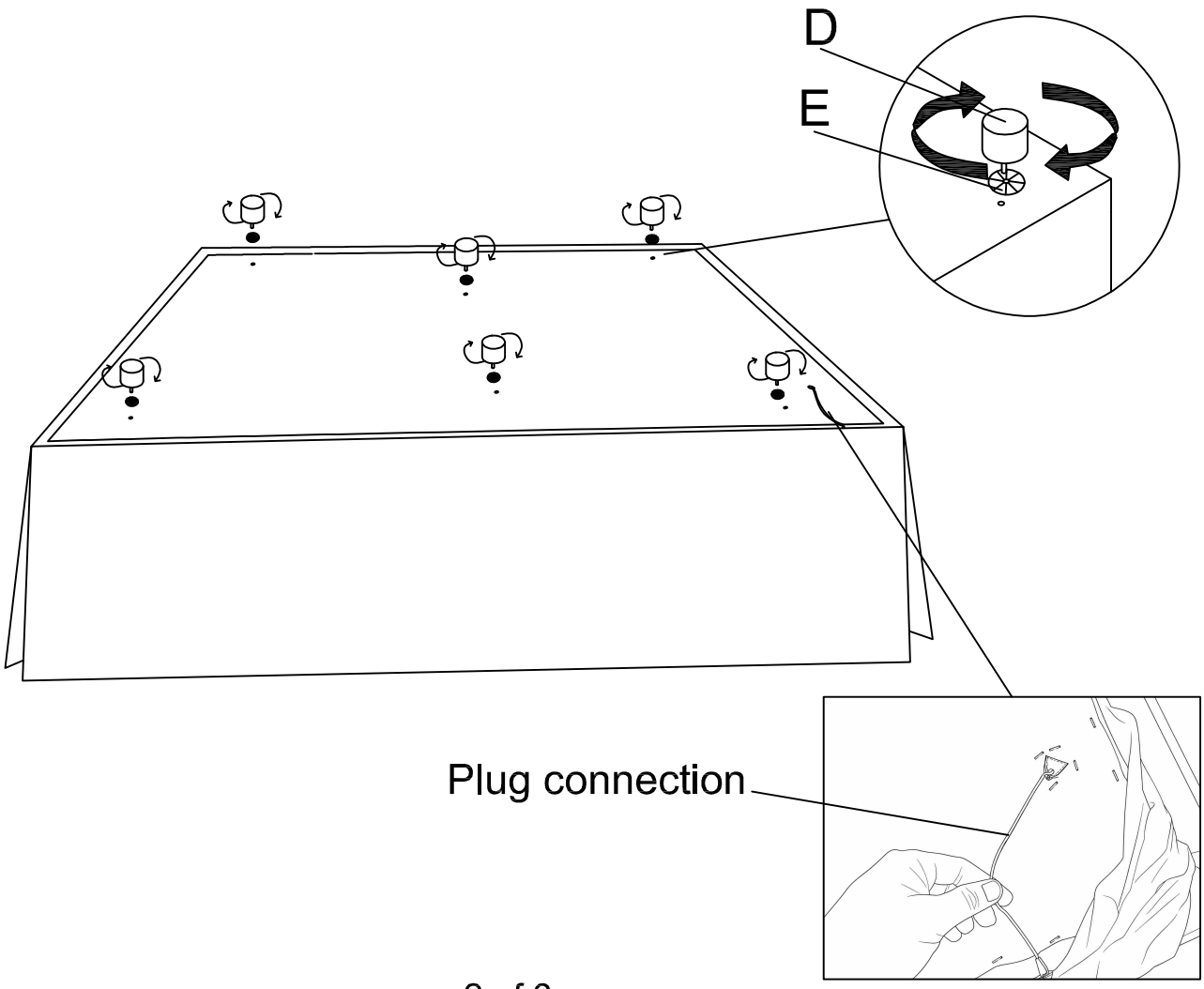

STEP 3.

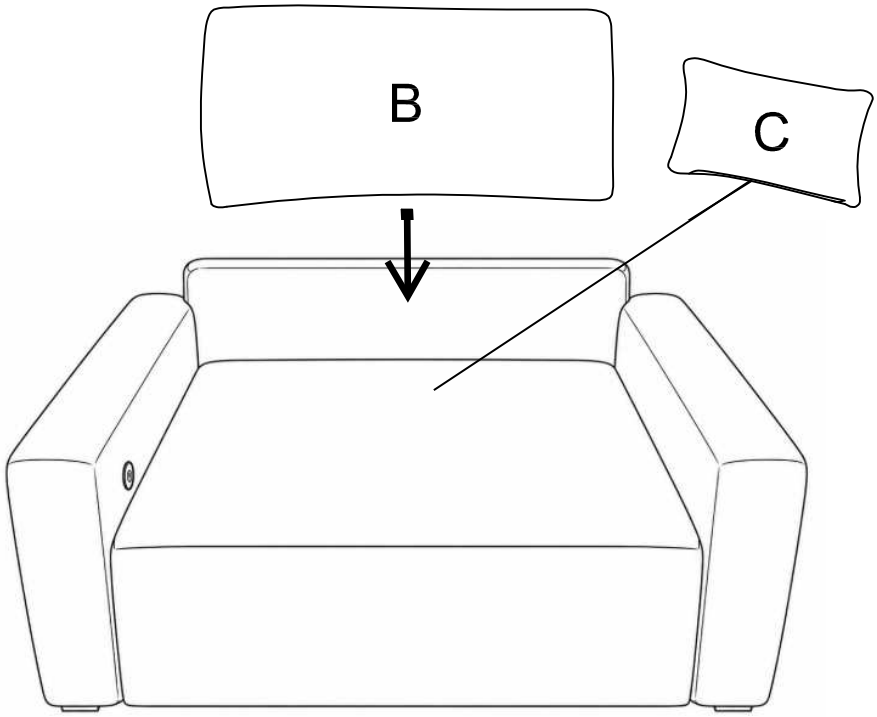

STEP 4.

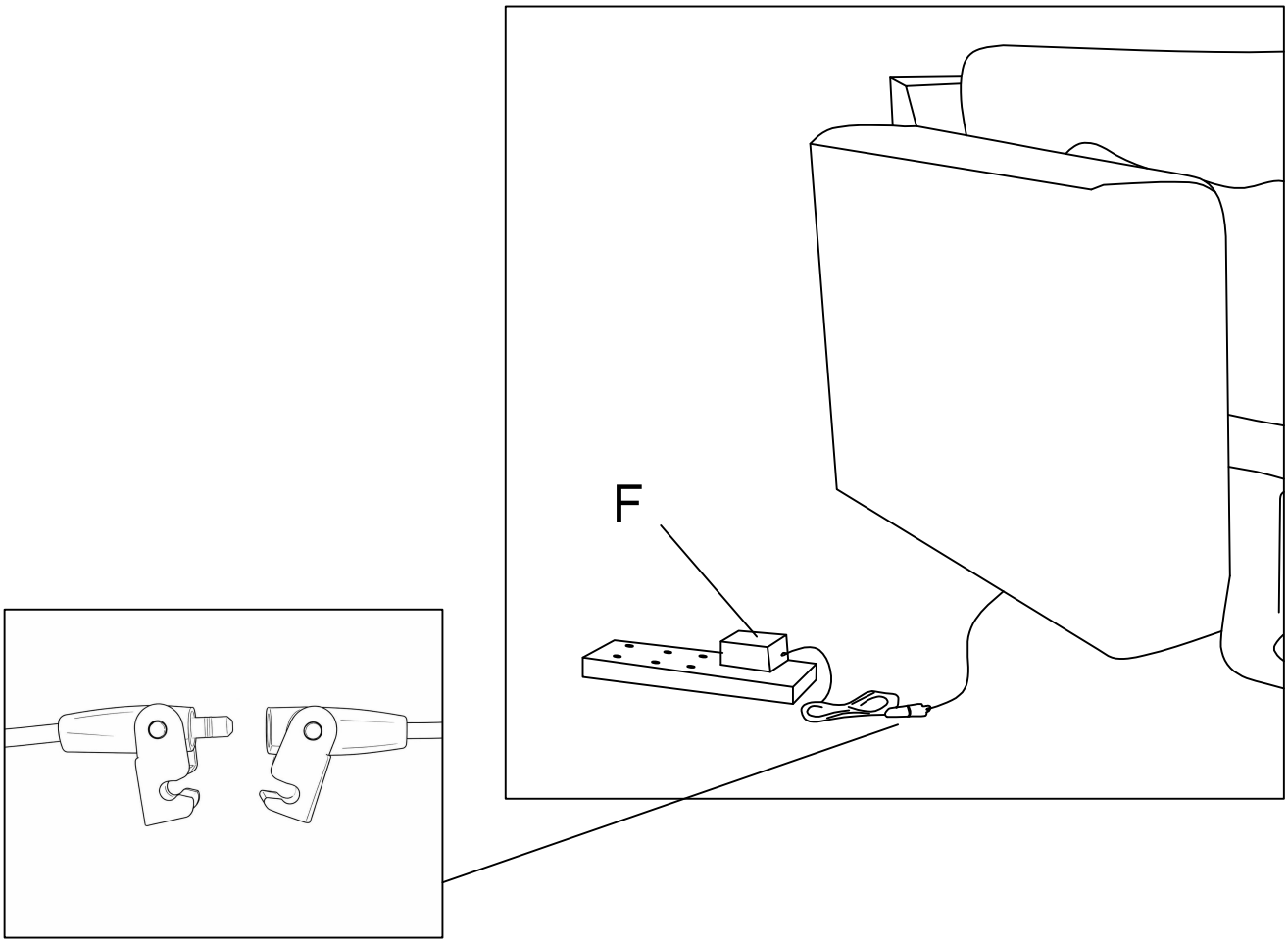

STEP 5.

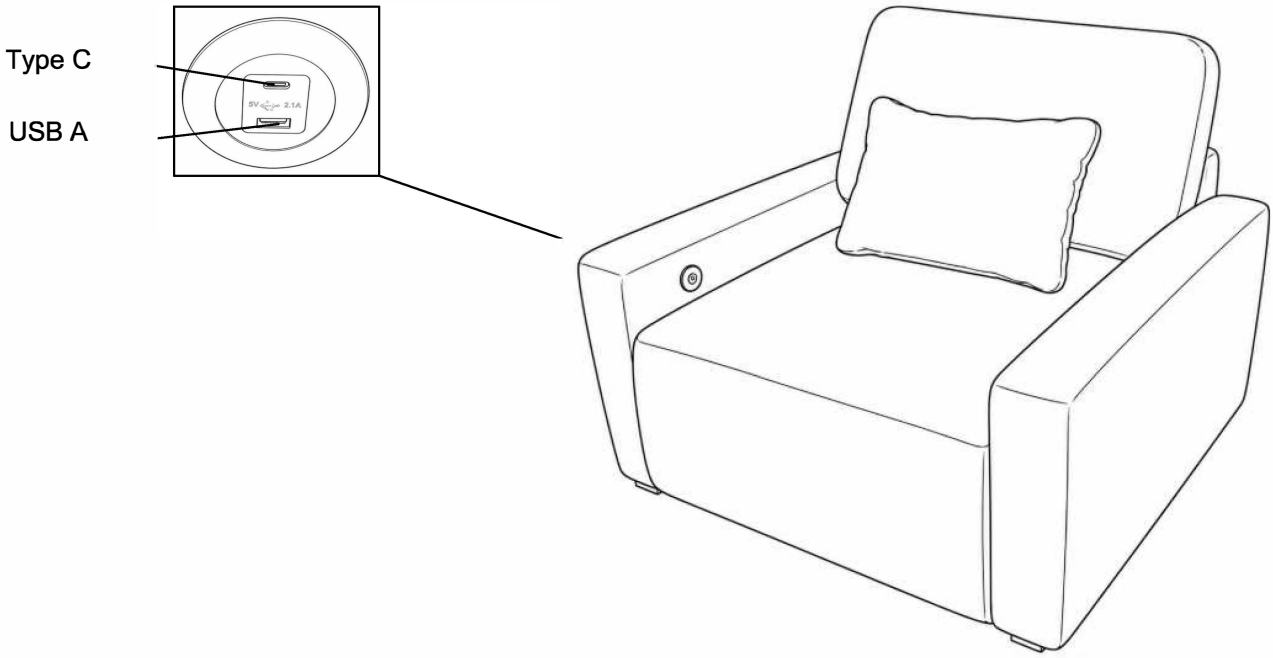

USE AS SLEEPER

Step 1.

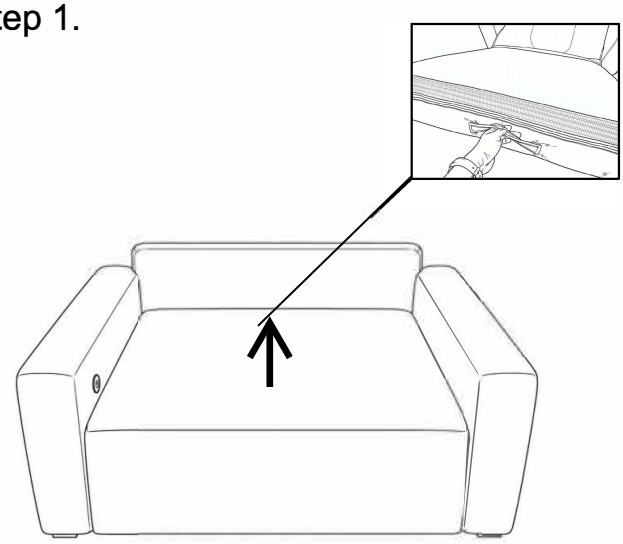

Step 2.

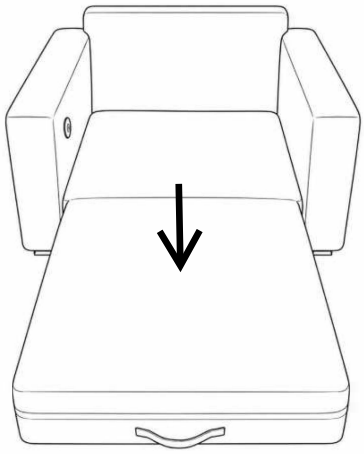

Completed.

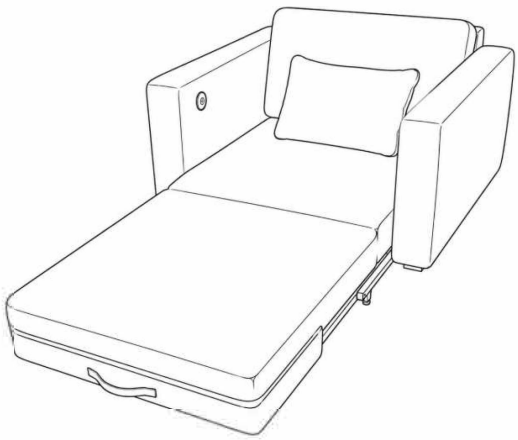

USE AS CHAIR

Step 1.

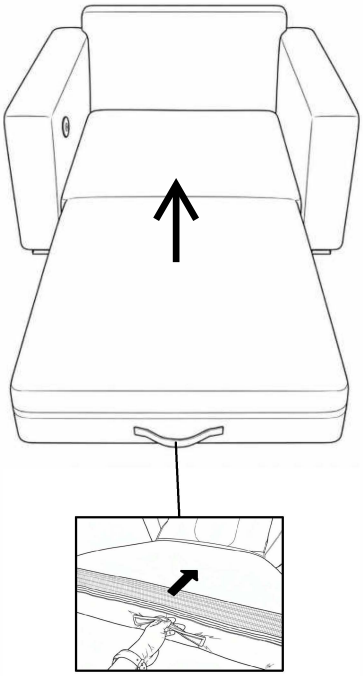

Step 2.

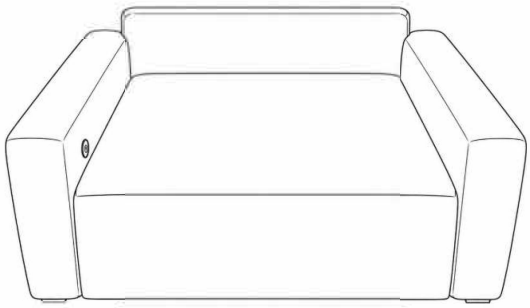

Completed.

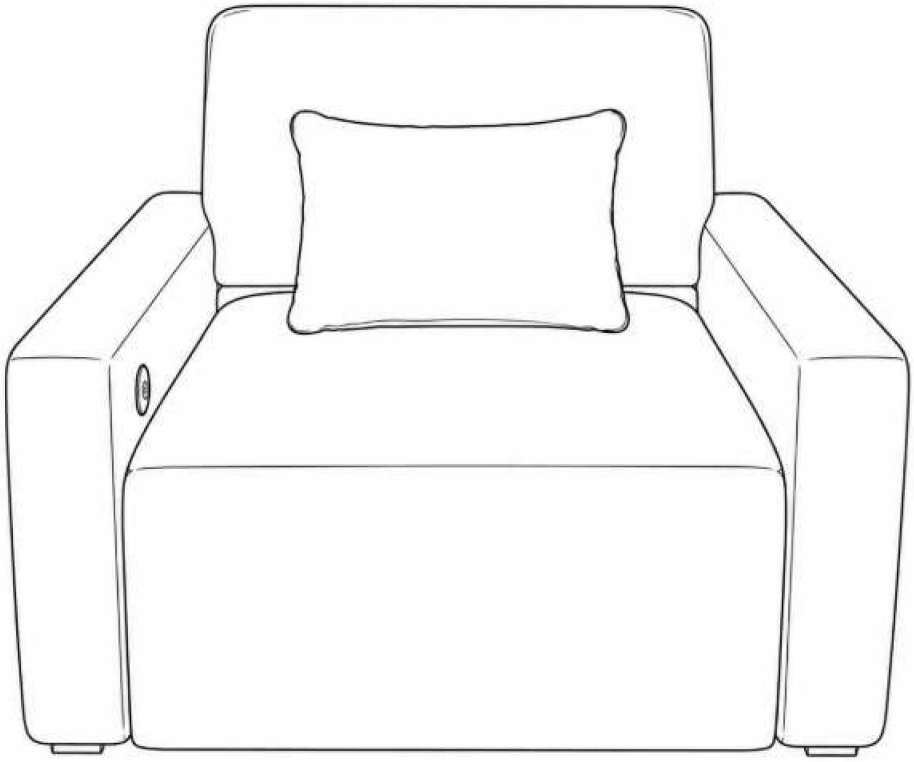

COMPLETED.

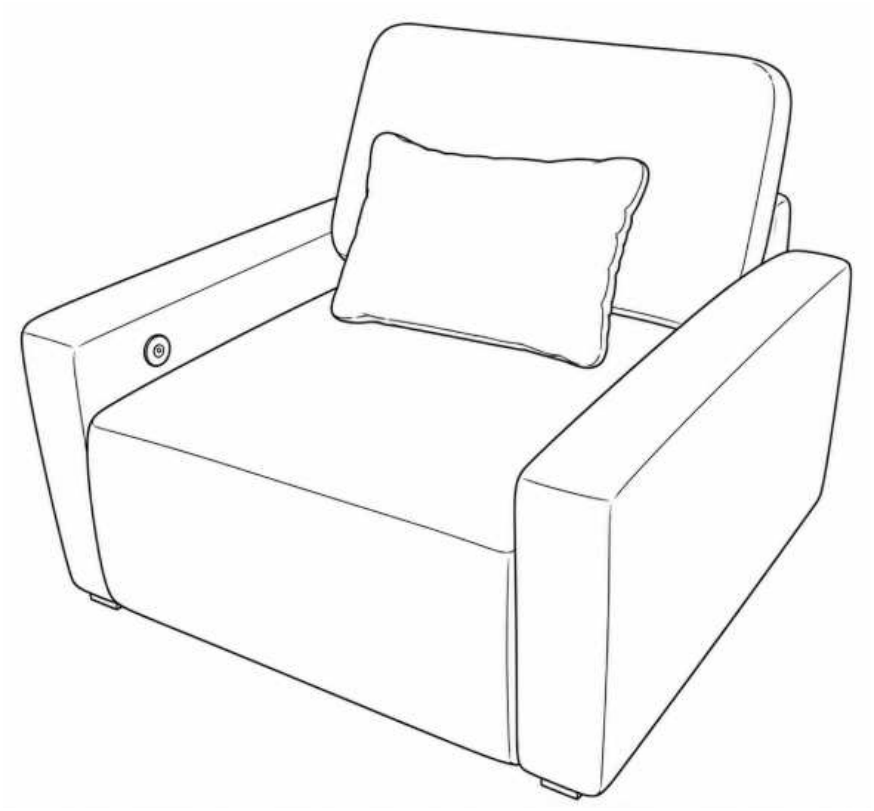

Care Instruction for Textured Fabric Furniture:

To maintain the original appearance of your textured fabric furniture, please follow the simple care procedures below:

- Avoid exposing furniture directly to sunlight or heating and air conditioning outlets. Sunlight and/or exposure to heating and air conditioning outlets will fade/damage textured fabric
- Vacuum or wipe with a soft cloth to remove dust.
- Hardware may loosen over time. Periodically check to make sure all connections are tight. Re-tighten if necessary.



For items used on wooden floor, hard surfaces or carpets, it is recommended to install protective pads under all legs and supports to prevent damages, scratches, and discoloration.