L27.5×W13.7×H35.4

INSTALLATION INSTRUCTIONS

THANK YOU FOR CHOOSING OUR PRODUCTS !

Before Assembly:

1.Please confirm the completeness of the components and the parts according to the Parts Diagram. If you have any question, Please contact with us on Amazon and our Professional Cu sto㗊er Service Team will approve all you need within 24 hours.

2.It's not too difficult to assemble, But it will be easier if there is another one assemble it with you.

During Assemble:

1. Please pay attention that some co㗊ponen ts may be a little sharp, Take care.

2.During assembly, please fix the screws temporarily and tighten them at last.

Tips: You can also check videos of installation on Amazon.

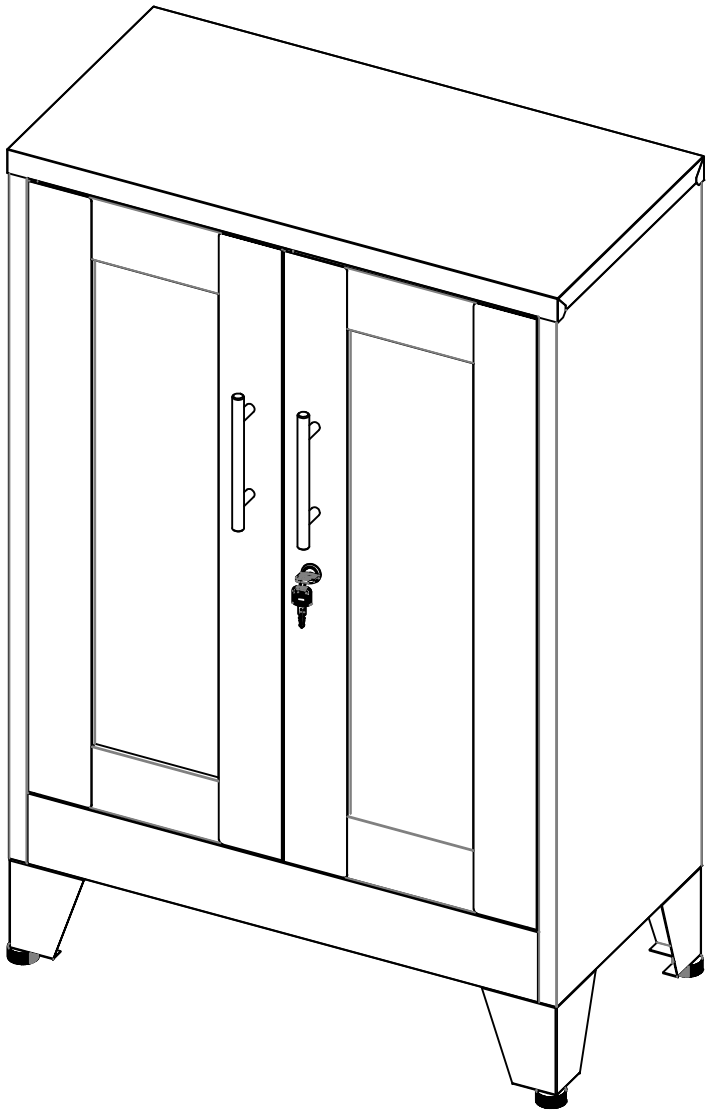

F L Y

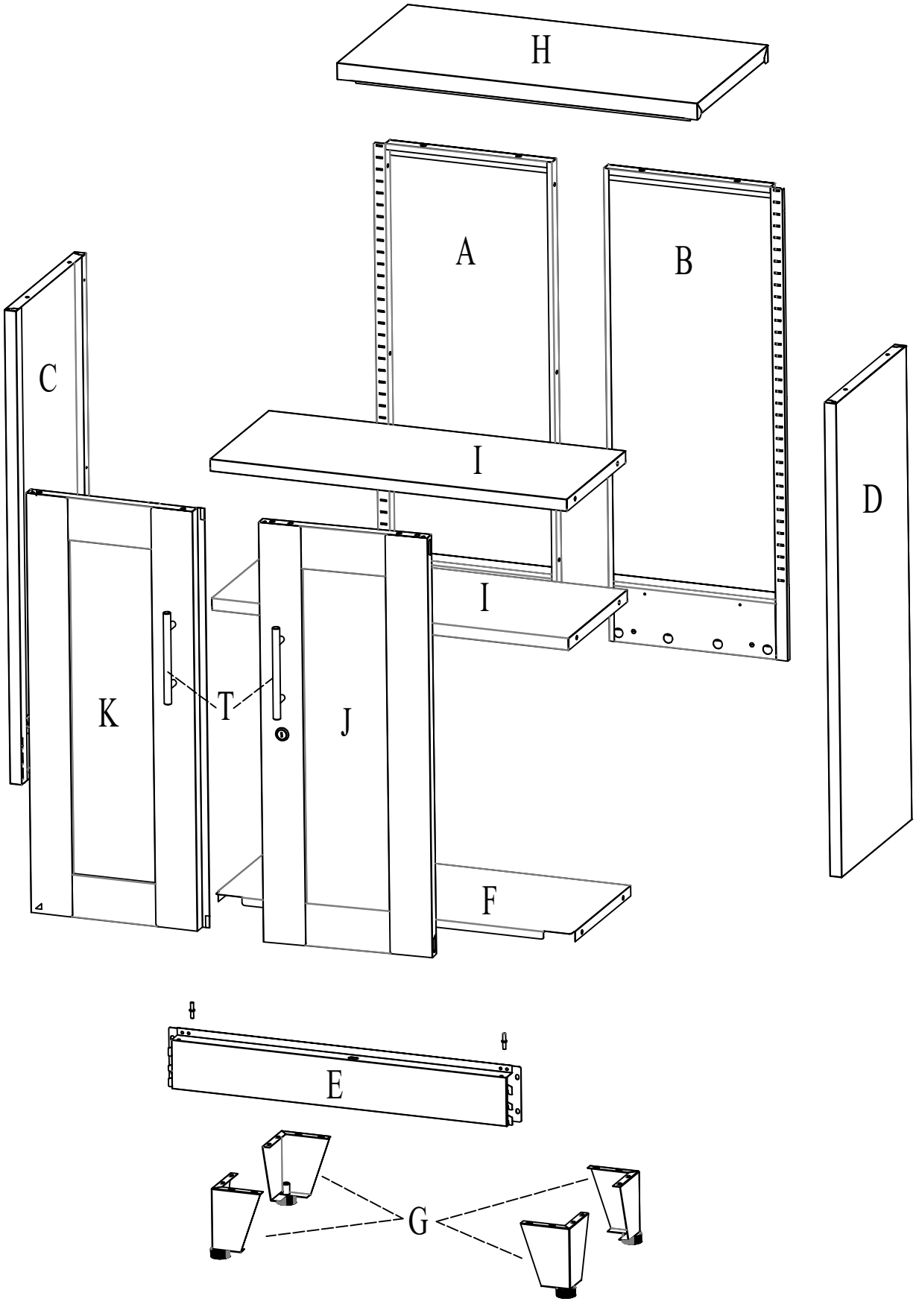
H
A
B
C
I
D
I
K
T
J
F
E
G

PARTS LIST LISTEDESPIECES LISTADEPIEZAS

	Nom Nombre	Part Piece Pieza	Qty Qte	Spare		Name Nom Nombre	Part Piece Pieza	Qty Qte	Spare
A	Left Back Panel		1		G	Standing leg	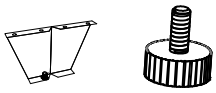	4	
B	Right Back Panel		1		O	Shelf Support		8	2
C	Left Side	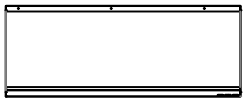	1		V	Laminate fastening buckle	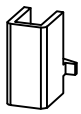	8	2
D	Right Side	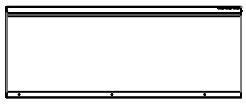	1		S	Door Pivot Pin Shim\	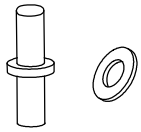	2	2
E	Kick Plate	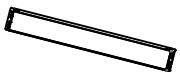	1		T	Haft	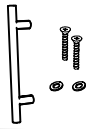	2	
F	Bottom Panel		1		Q	magnet		4	
H	Top Panel		1		W	Set screw	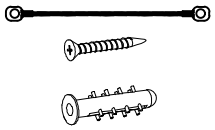	1	
I	Shelves		2						
K	Left Door	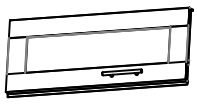	1						
J	Right Door		1						
L	13/32"Screw		3						
N	13/32"Screw		39	2					

1

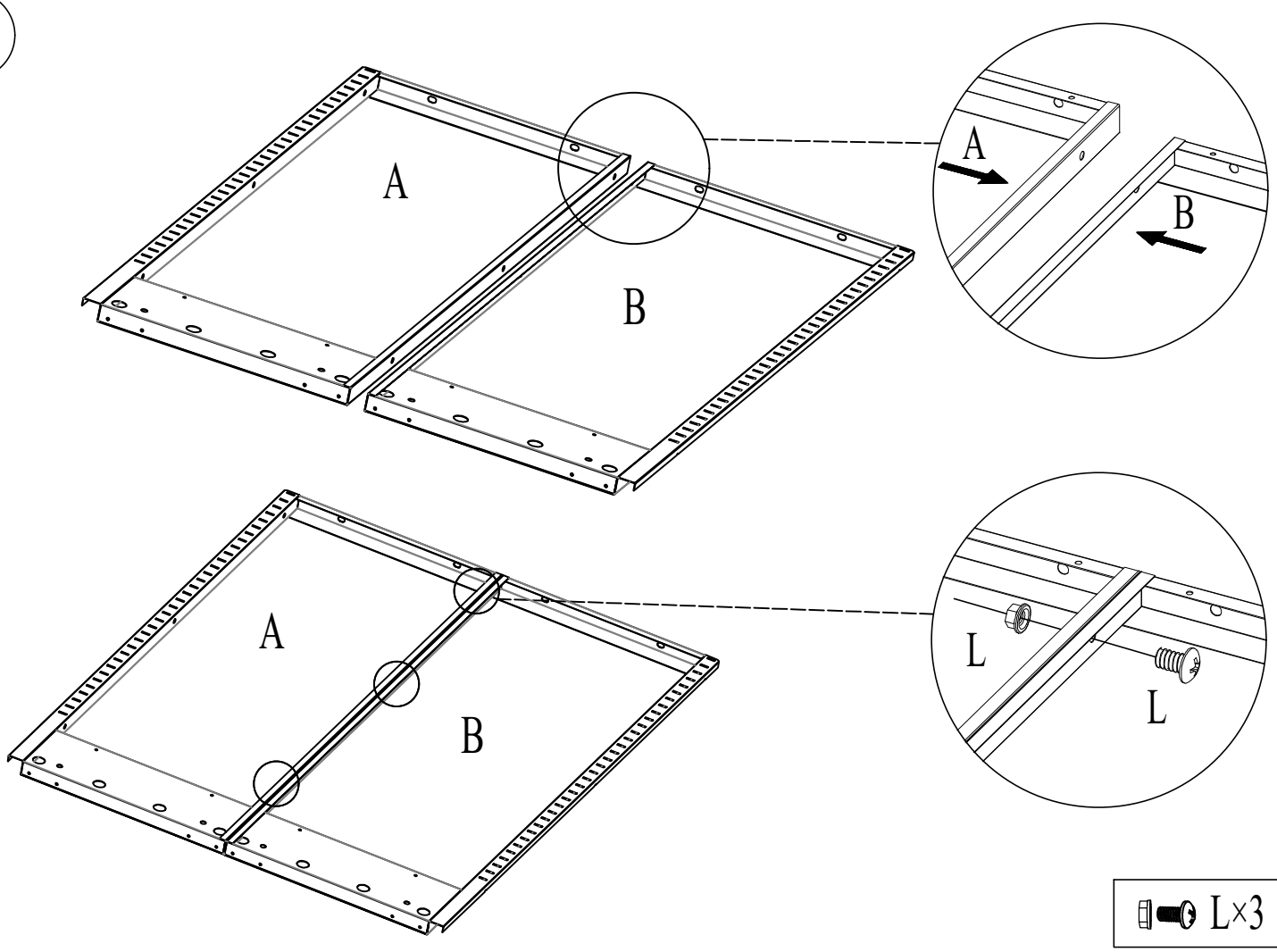

L×3

2

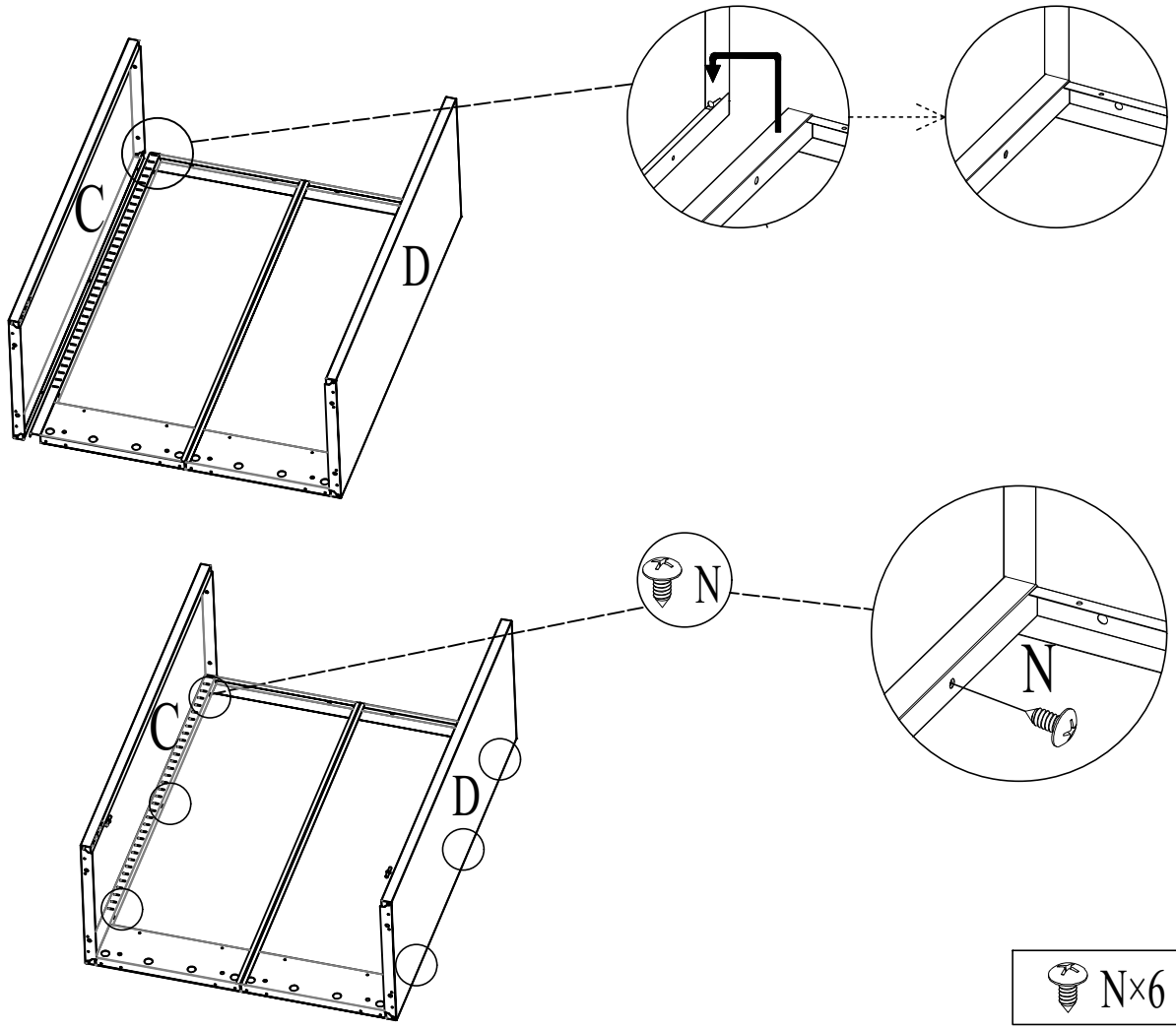

N×6

3

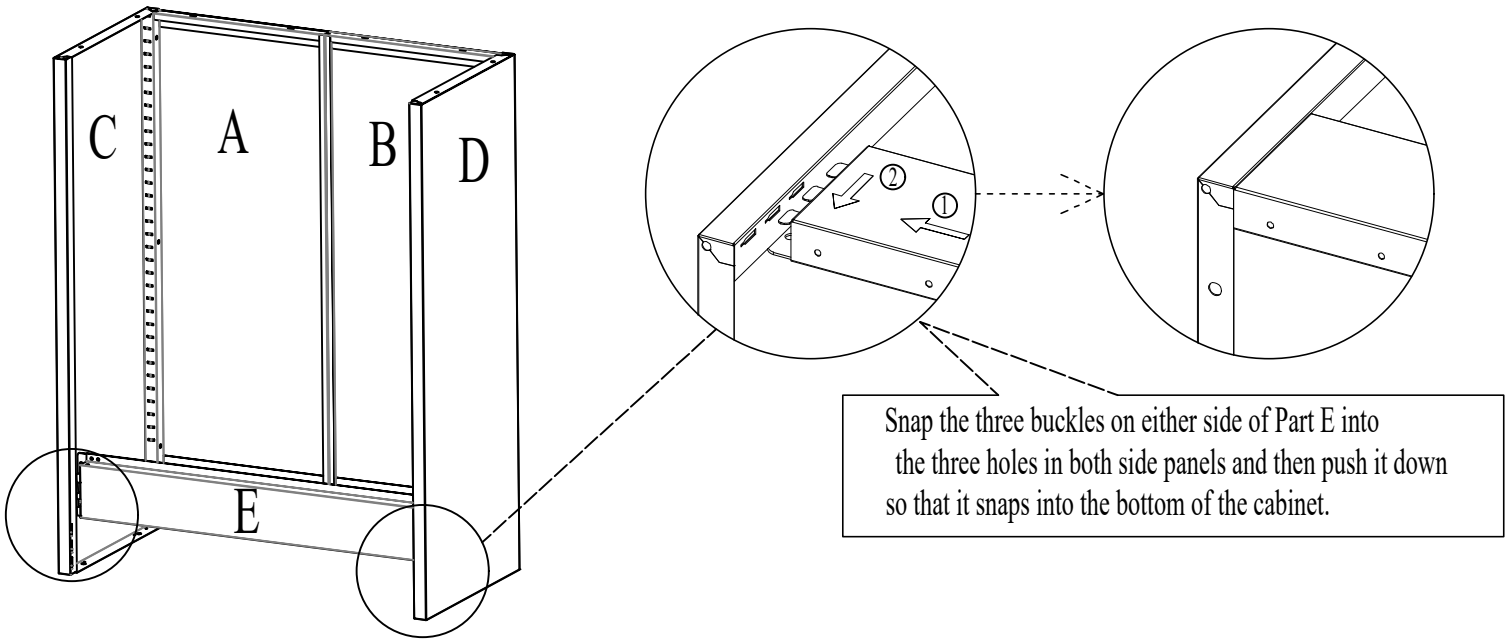

Snap the three buckles on either side of Part E into the three holes in both side panels and then push it down so that it snaps into the bottom of the cabinet.

4

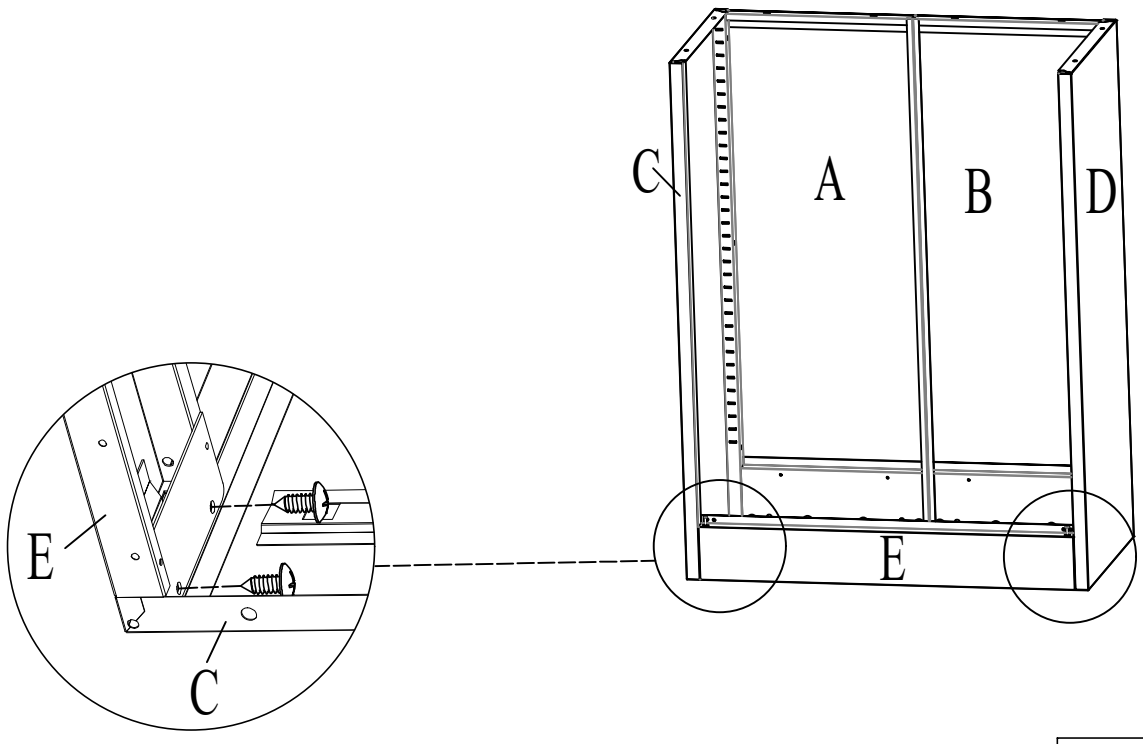

N×4

5

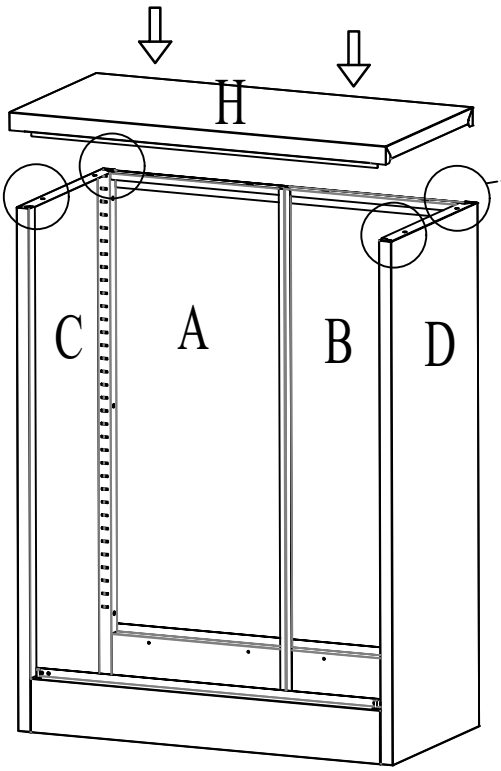

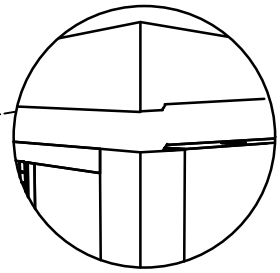

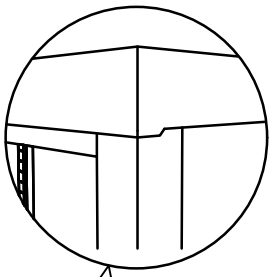

The four corners of the top need to include the four corners of the side panels

6

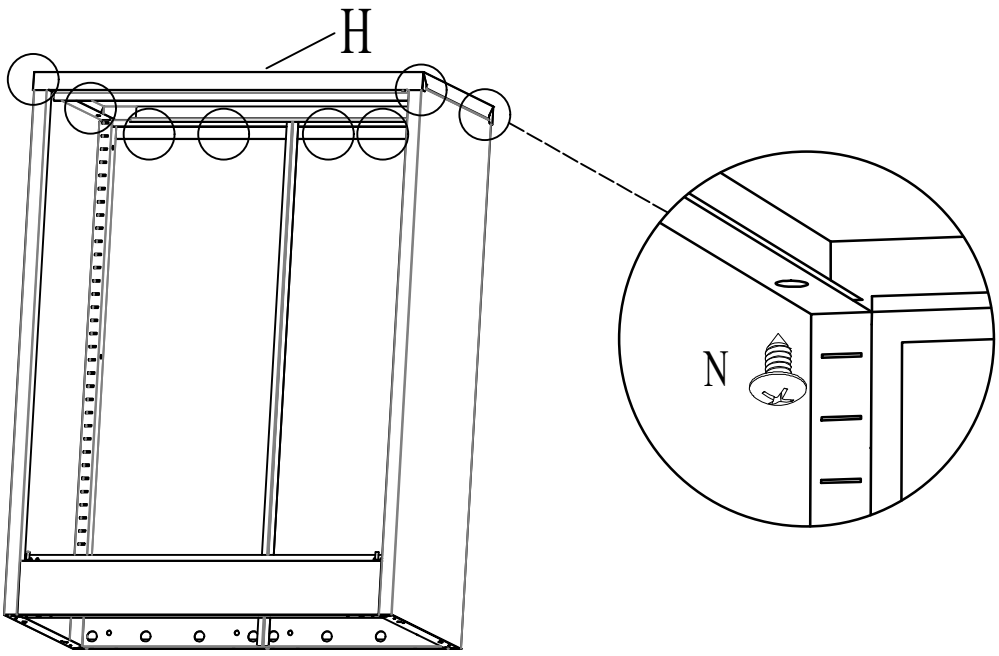

N×8

7

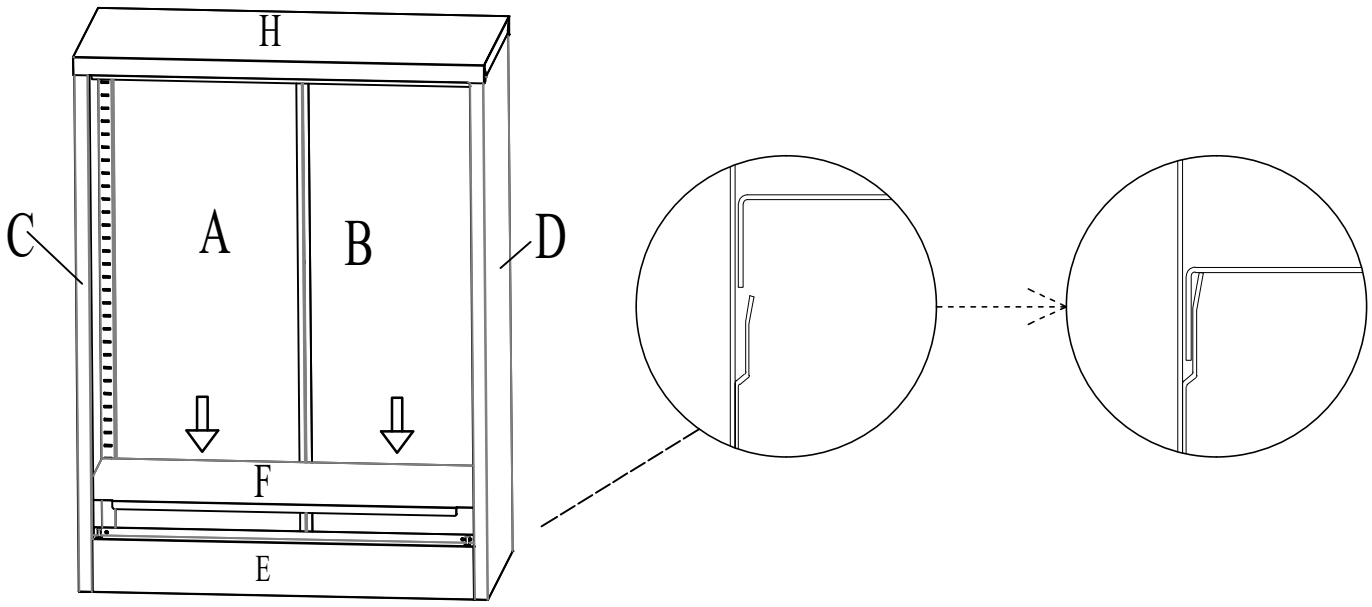

8

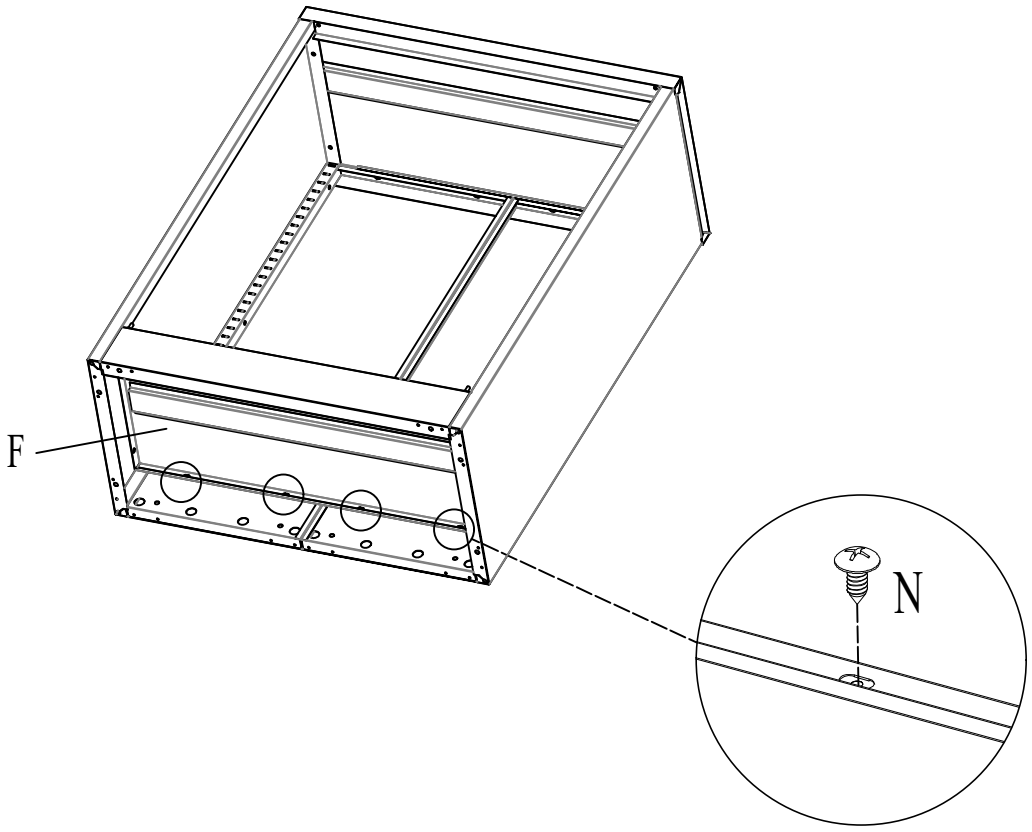

N×4

9

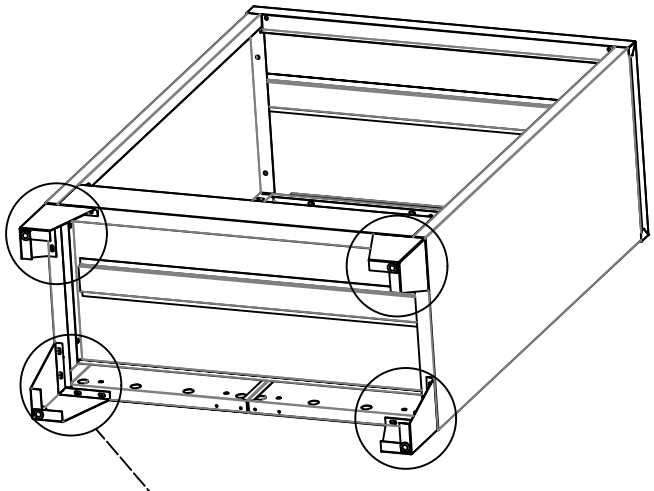

G

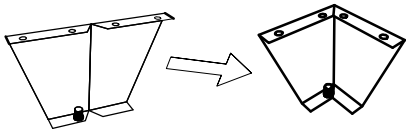

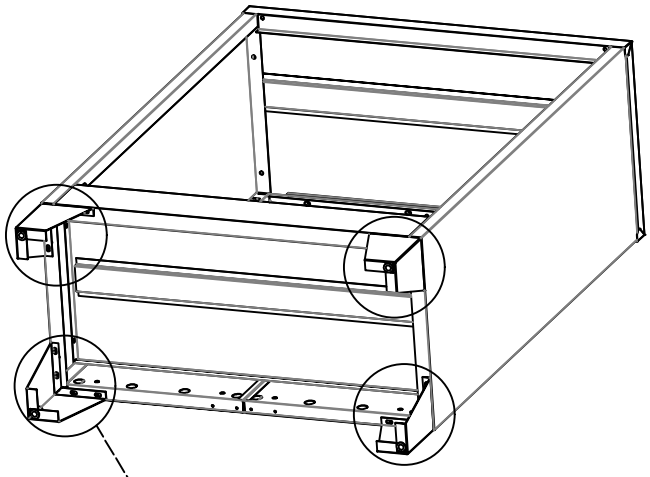

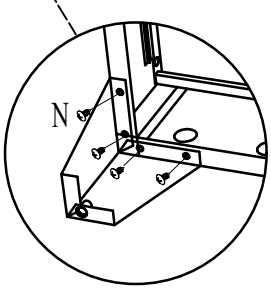

If you think it looks better without the standing corner，you can choose to skip this step (9) and the next step (10)

N×16

10

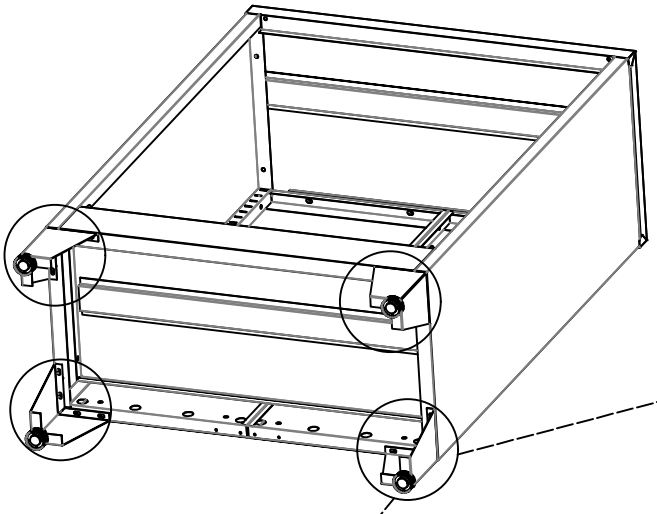

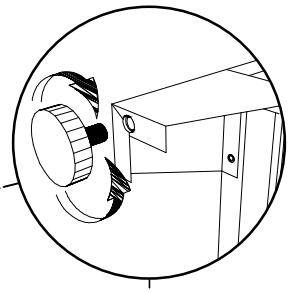

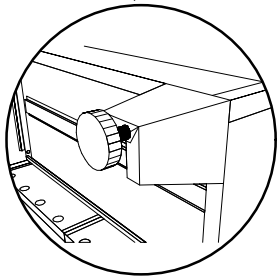

G

G×4

11

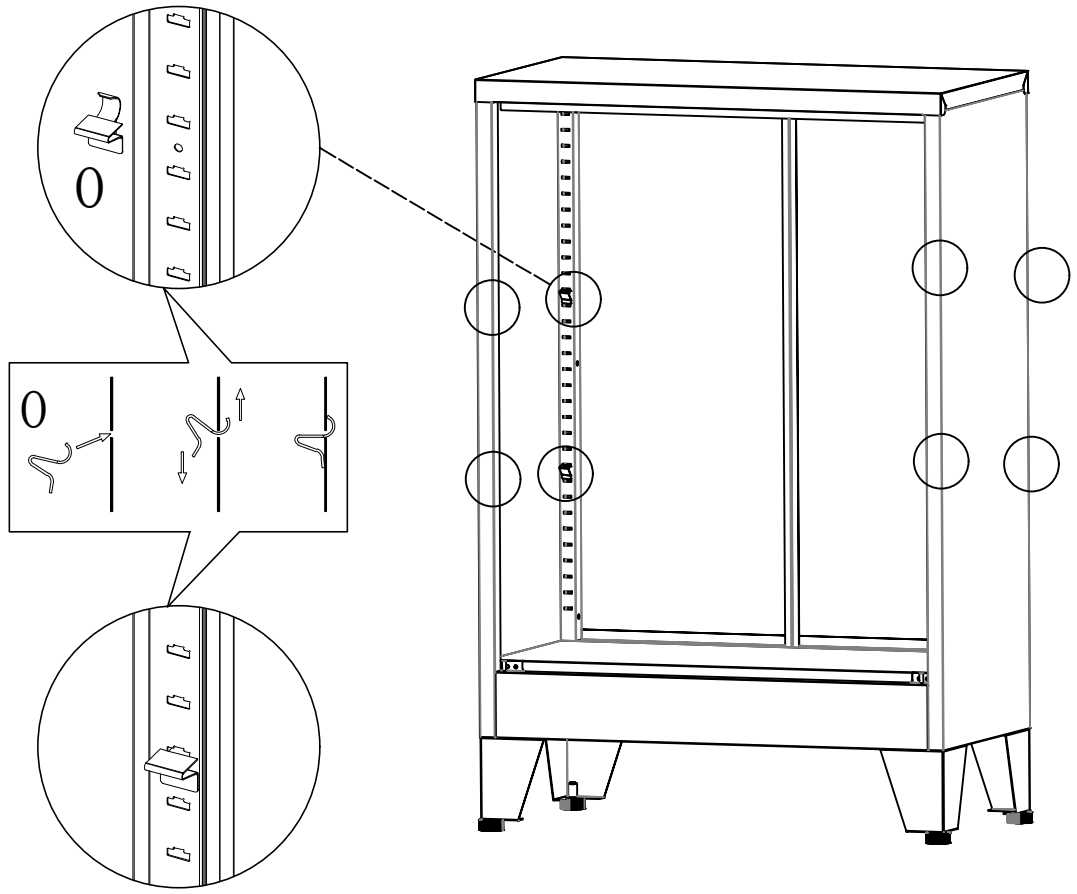

O×8

12

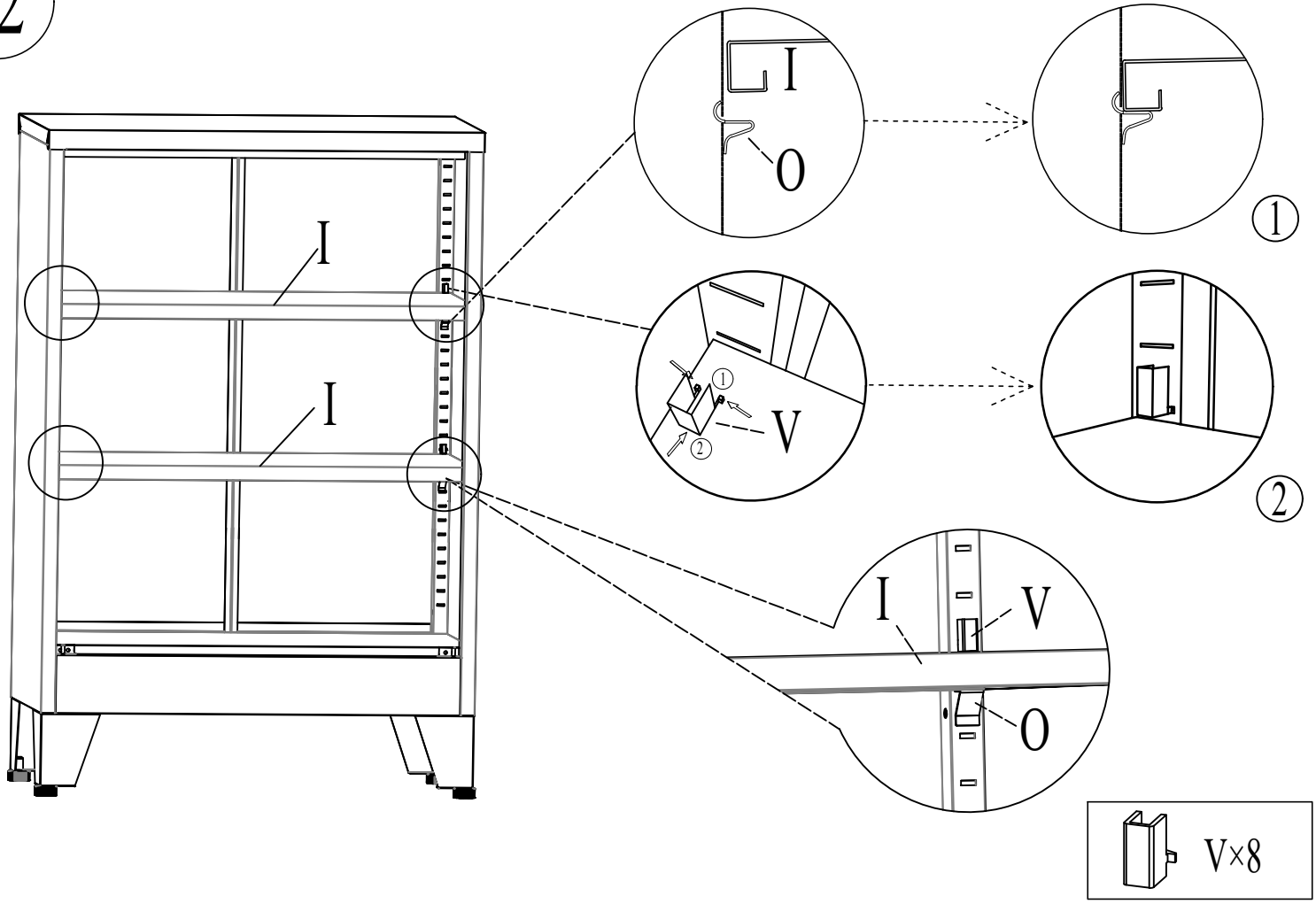

V×8

13

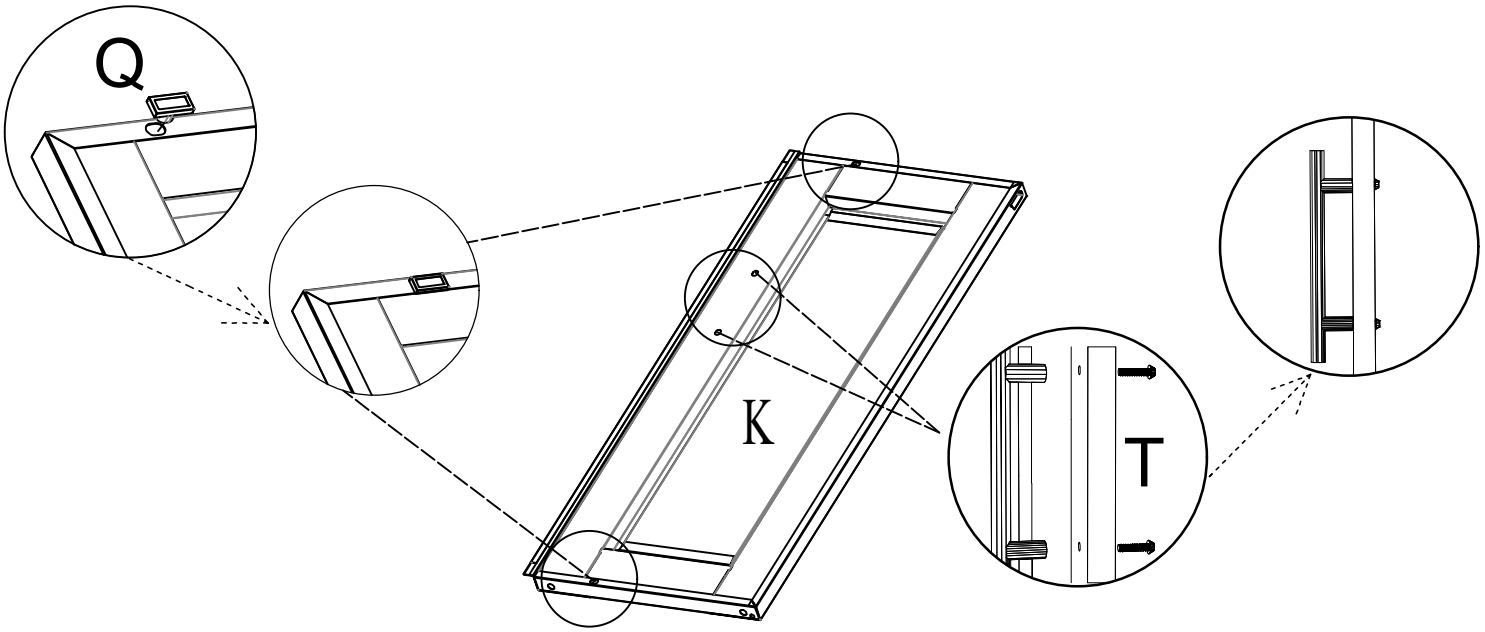

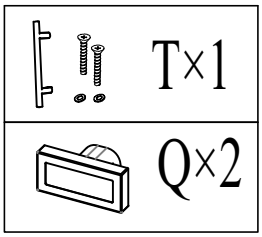

14

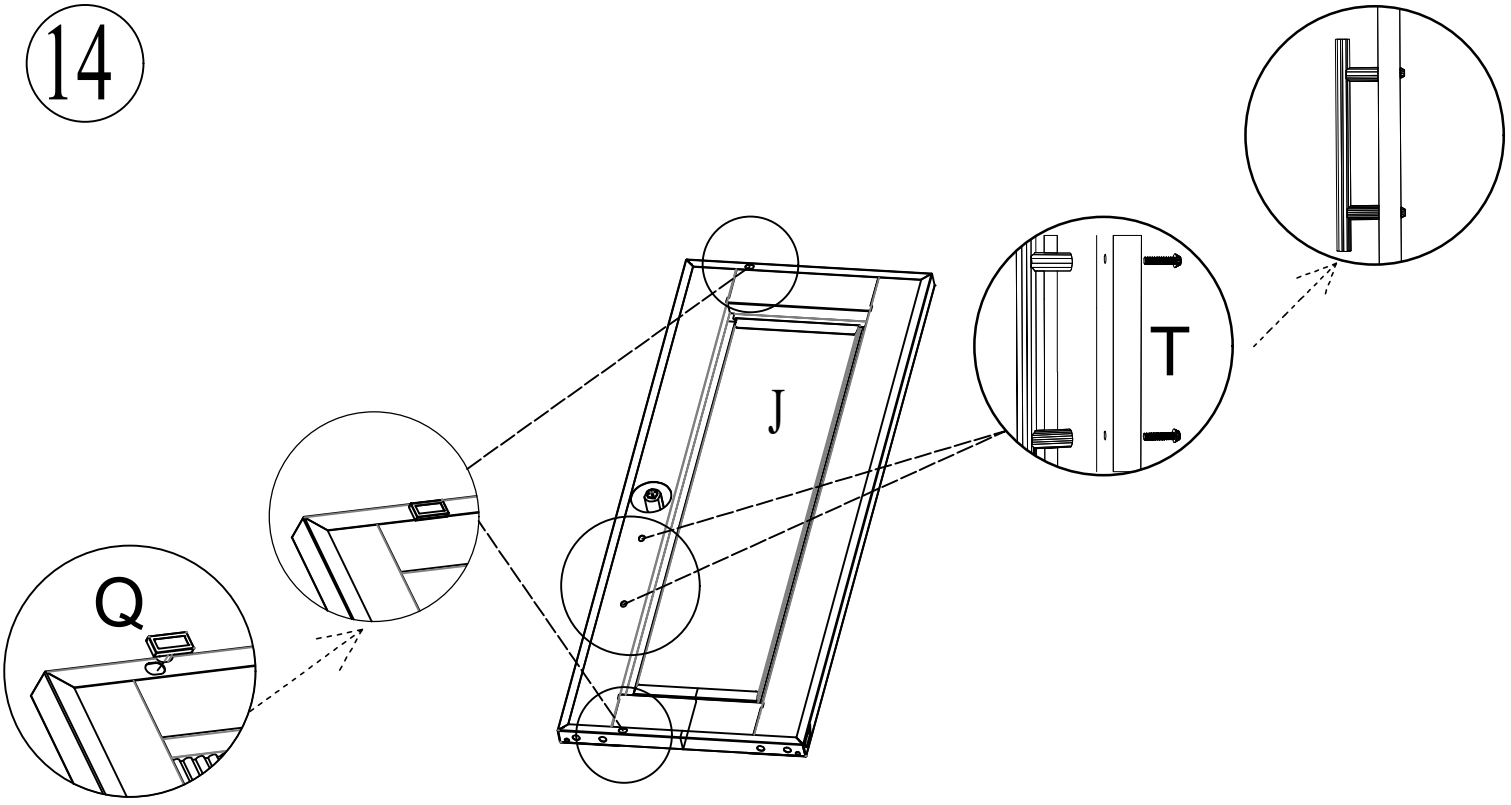

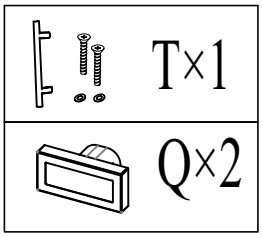

15

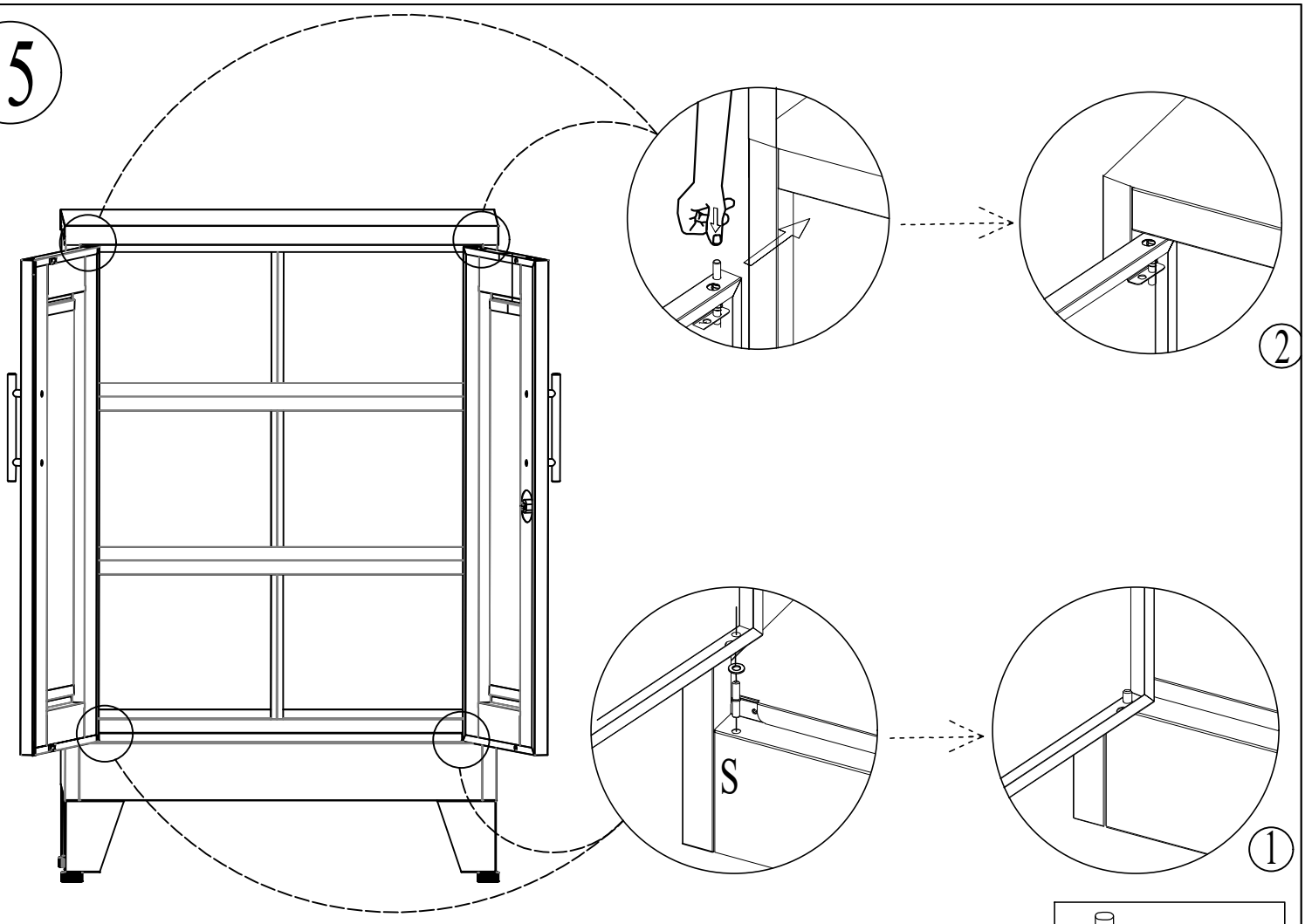

S ×2

16

The cabinet can be fixed to the wall as needed.

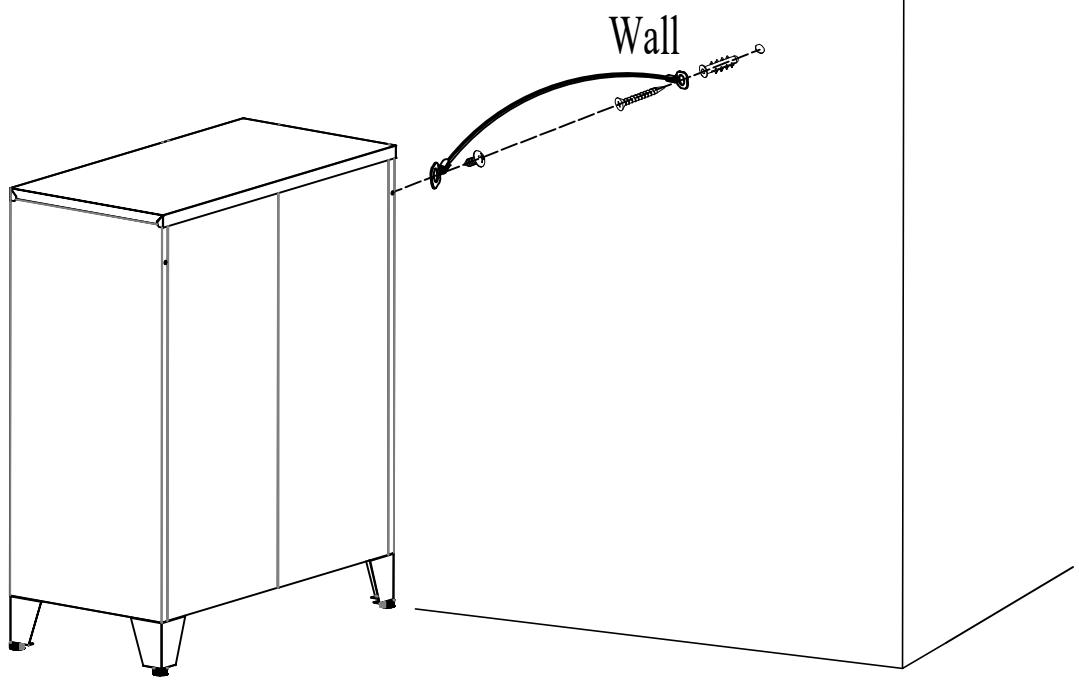

N × 1

W × 1

Problems and Solutions

Question 1: when encountering uneven height of two door panels,
adjust the bottom adjustment foot to make it flat.

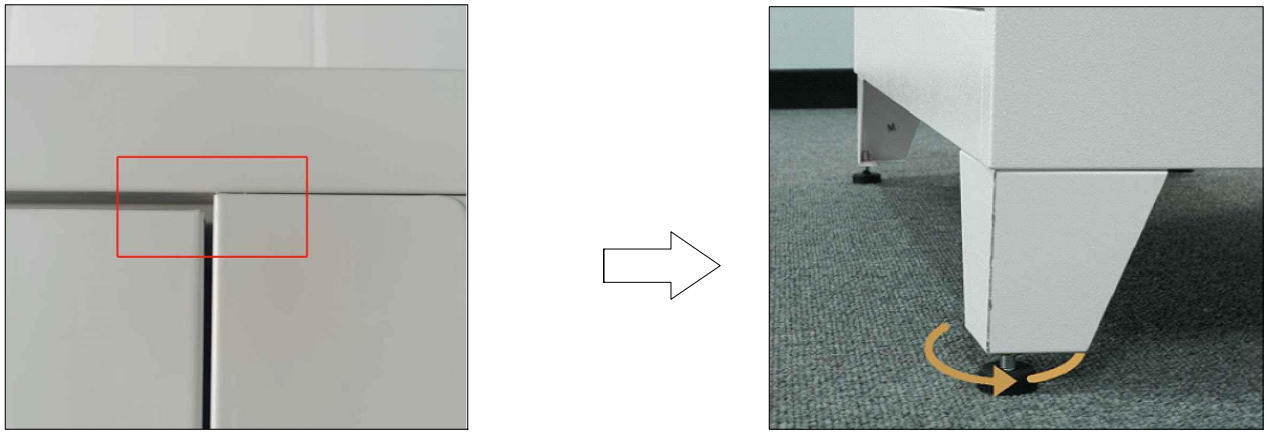

Question 2: When the door is closed, it still protrudes outward.
That's because the door is made of steel plate and has stretchability.
You can adjust it according to the method shown in the picture.

