ASSEMBLY INSTRUCTION

66B

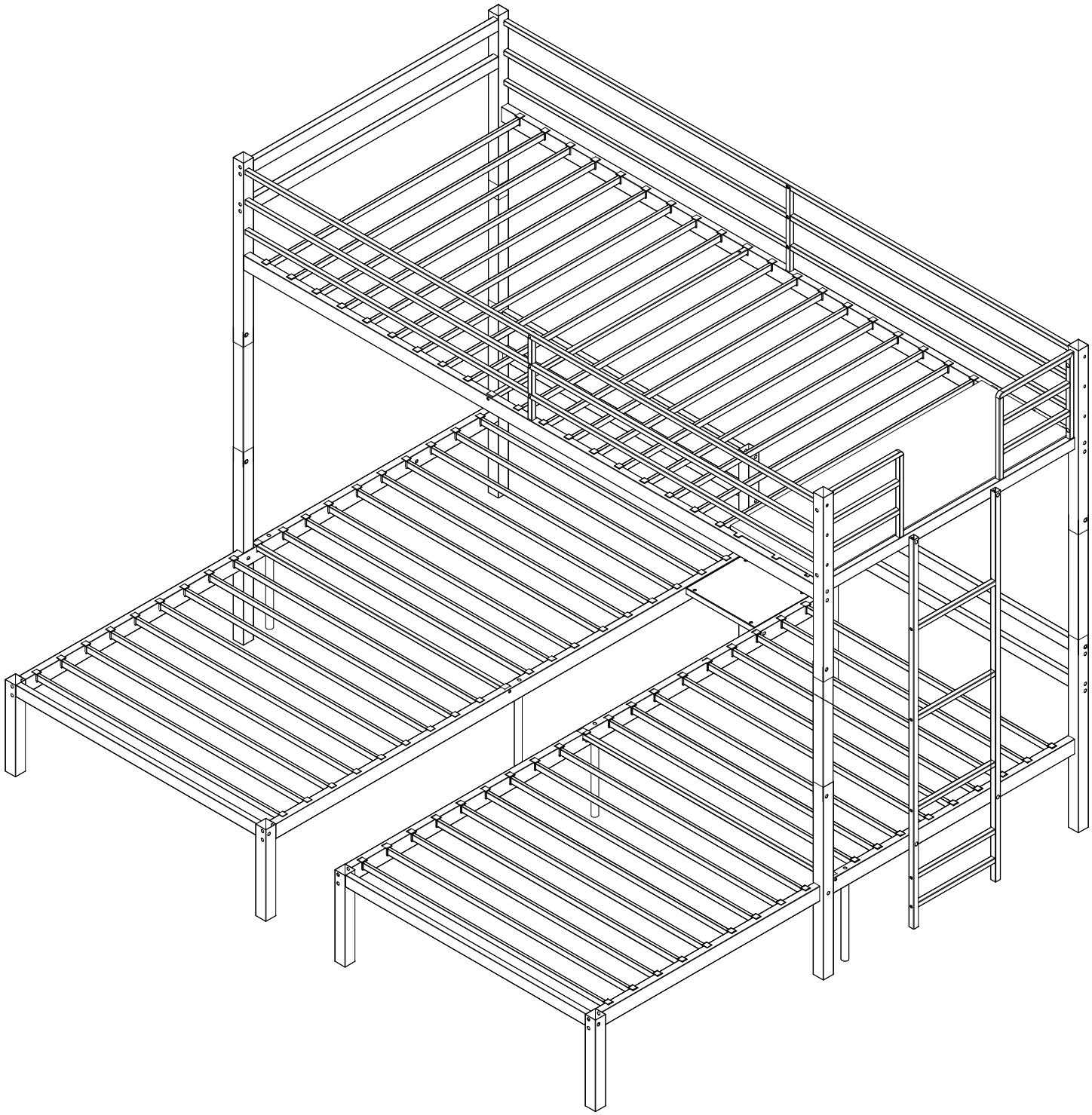

IMPORTANT NOTE

1.Please check that all parts are complete before installation.
2.Please strictly follow the installation steps to install.
3.Please install the bed on a clean and smooth surface to prevent any damage
4.Please do not use the power tools to assemble the bed.
5.Please periodically check all the fittings and re-tighten as necessary.
6. Please do not use the bed unless all bolts and screw are firmly secured

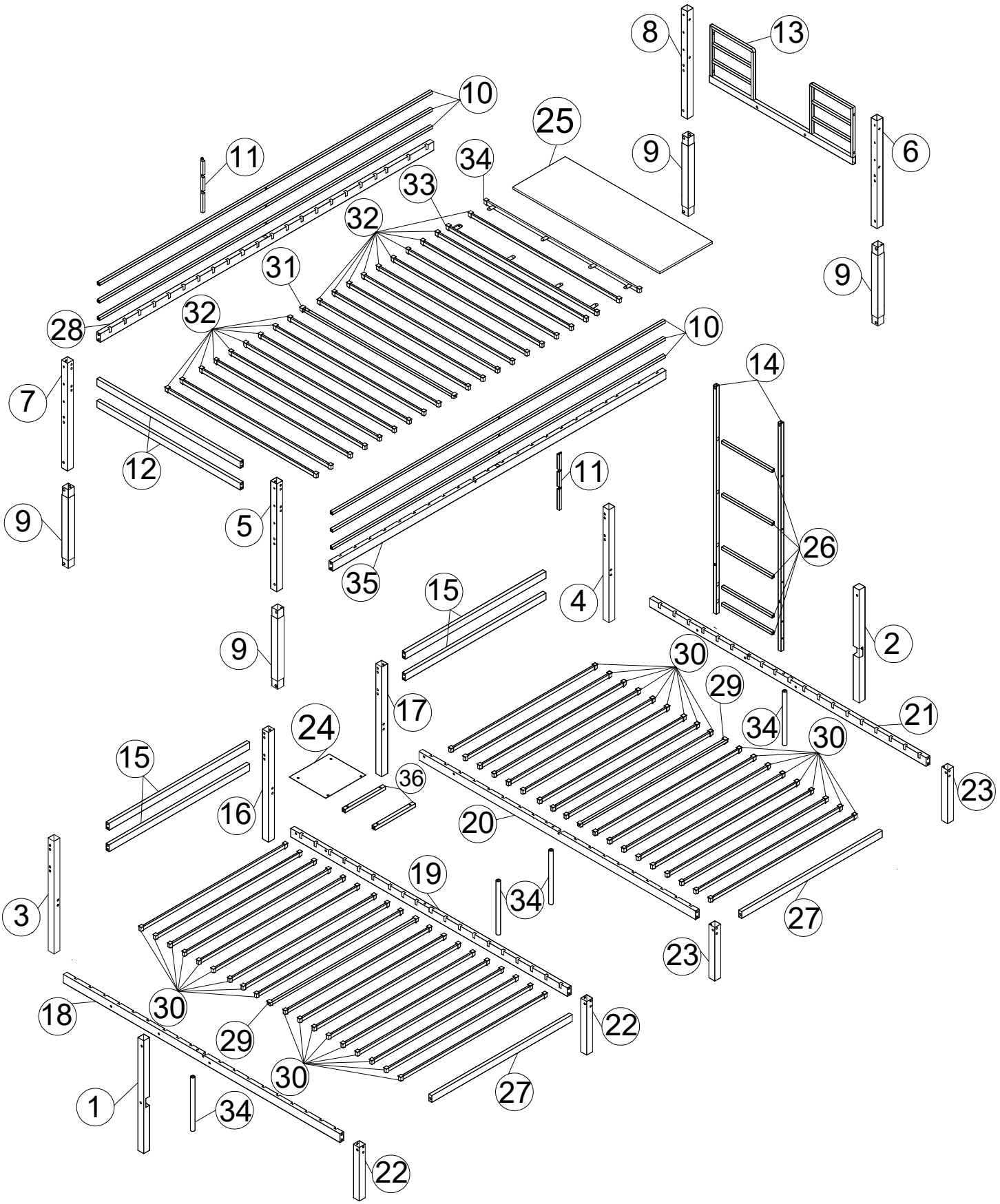

8
13
10
25
11
34
9
6
33
32
31
9
28
32
10
14
7
12
11
9
5
26
35
15
4
2
9
30
29
17
21
24
34
30
15
36
23
16
20
19
34
3
27
23
18
30
22
29
30
27
1
34
22

Components List

① x1

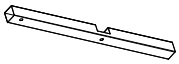

② x1

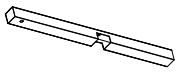

③ x1 The Lower Left Back Leg#1x1



④ x1 The Lower Right Back Leg#1x1

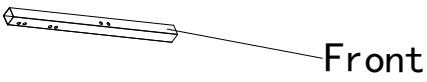

⑤ x1 The Upper Left Front Leg#1x1



⑥ x1 The Upper Right Front Leg#1x1



⑦ x1 The Upper Left Back Leg#1x1



⑧ x1 The Upper Right Back Leg#1x1



⑨ Connecting rod#1x4



⑩ x6



⑪ x2



⑫ x2



⑬ x1

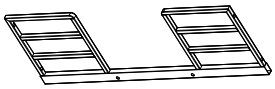

⑭ x2



⑮ x4



⑯ x1

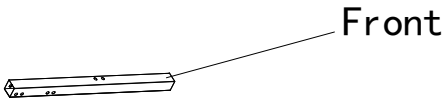

⑰ x1

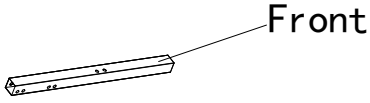

⑱ x1

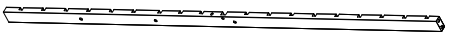

⑲ x1

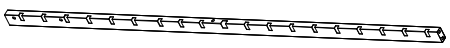

⑳ x1

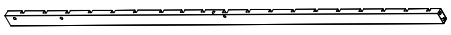

㉑ x1

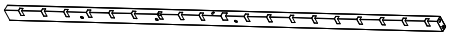

㉒ x2

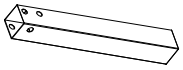

Components List

23 x2

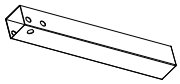

24 x1

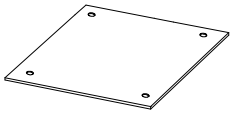

265x245

25 x1

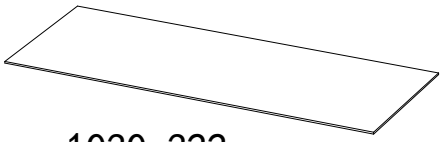

1030x322

26 x5



27 x2

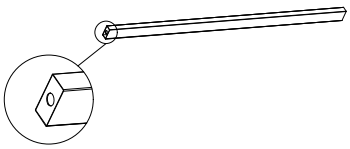

28 x1

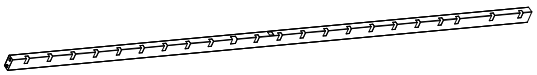

29 x2 16X16

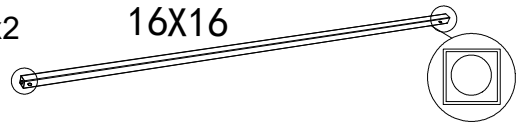

30 x36 10X20

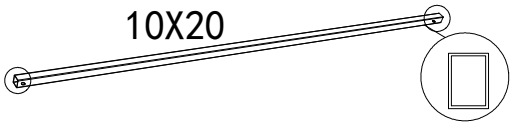

31 x1 16X16

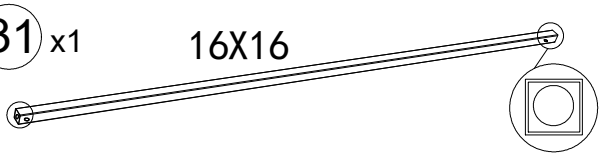

32 x19 10X20

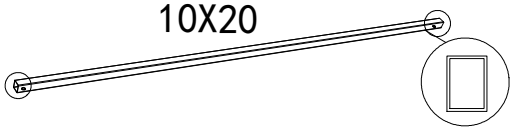

33 x2 10X20

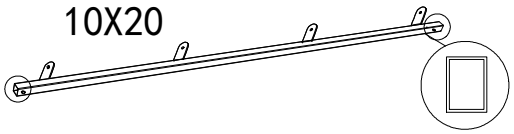

34 x4



35 x1

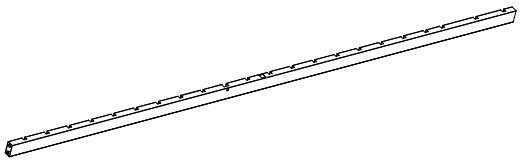

36 x2

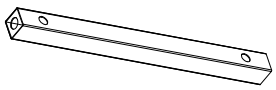

Bubble Pads

37 x5

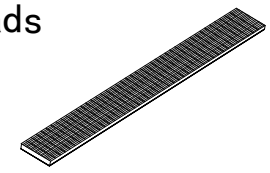

Hardwares List

Item	Description	Qty
A	 M8x60	52
B	 M8x50	4
C	 M8x40	4
D	 M8x30	12
E	 M6x20	10
F	 M6x40	6
G	 M6x12	10
H	 M8x25	16
J	 M6 Allen key	2
K	 M8 Allen key	2
L	 M8x16	4
M		6
N		114

Item	Description	Qty
P	 M6x12	6
Q	 M6x60	12
R	 M6x12 Screw	8
S	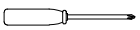	1
T	 M6x35 Screw	4
U		4
V	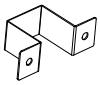	2
W	 M6x16	4
X	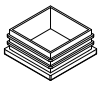 40x40mm	8

STEP1

A	M8x60	28	
B	M8x50	4	
H	M8x25	4	
K	M8 Allen key	2	

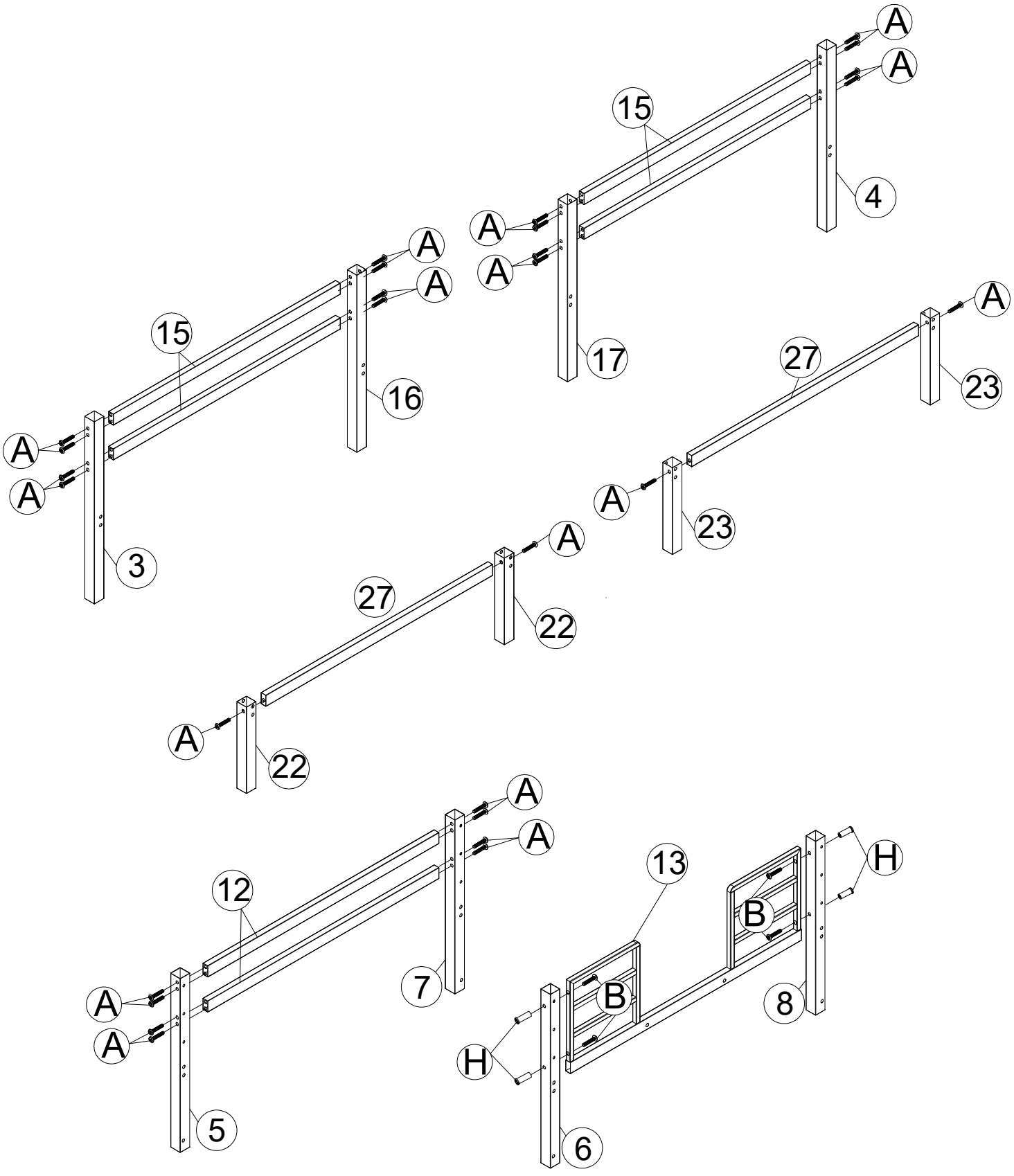

Please install the bed on a clean and smooth surface to prevent any damage!

STEP2

A		M8x60	16
C		M8x40	4
K		M8 Allen key	2

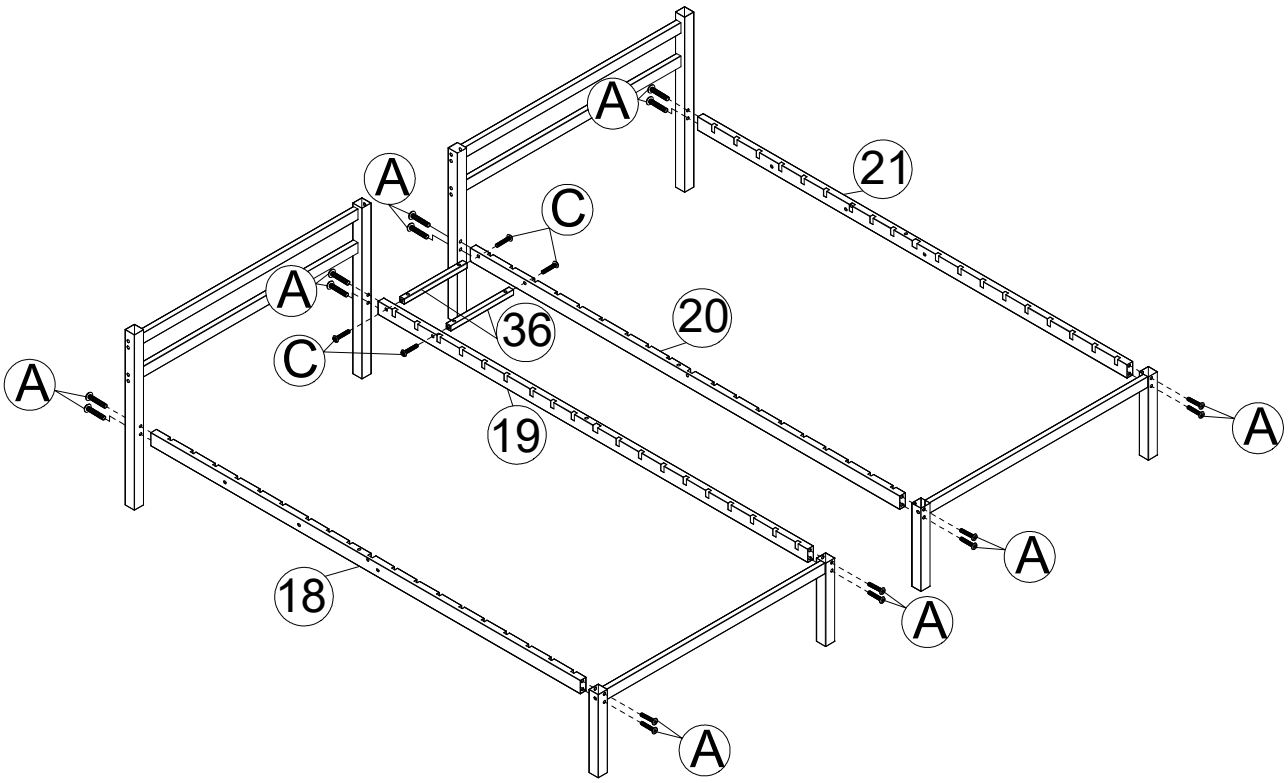

STEP3

N		10x20	72
M		16x16	4

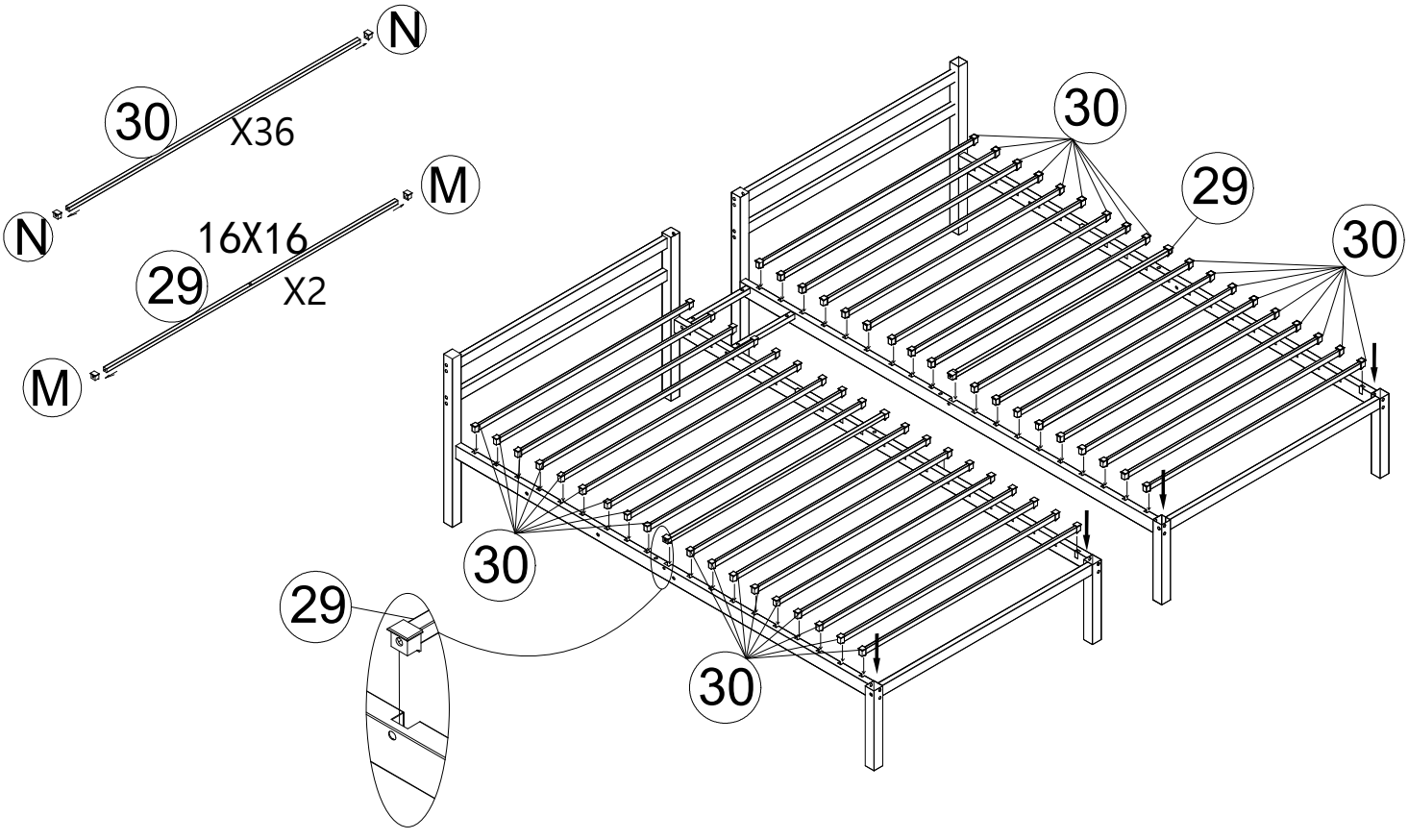

STEP4

F	M6x40	4	
J	M6 Allen key	2	
K	M8 Allen key	2	
L	M8x16	4	
W	M6x16	4	
G	M6x12	4	

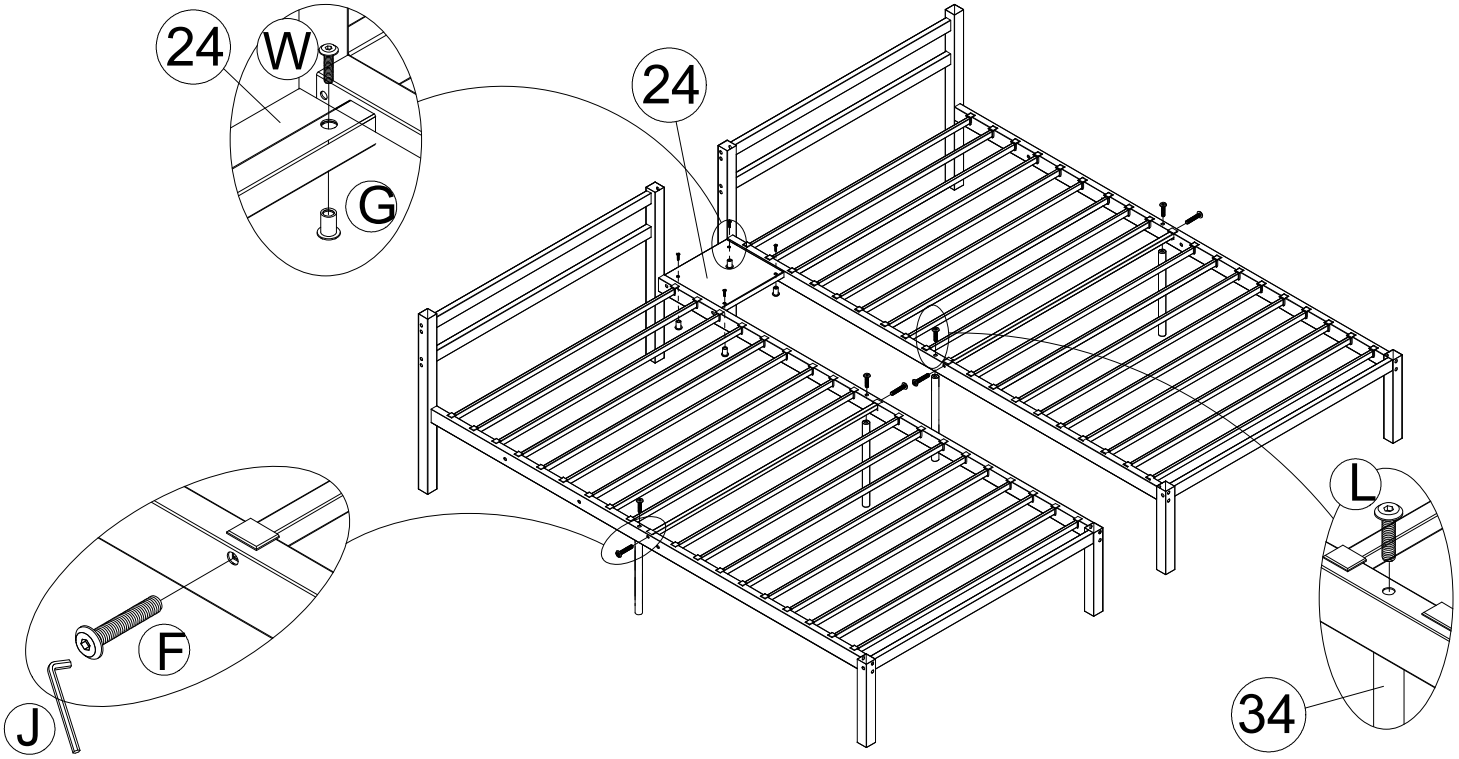

STEP5

A	M8x60	8	
G	M6x12	6	
K	M8 Allen key	2	
P	M6x12	6	
Q	M6x60	12	

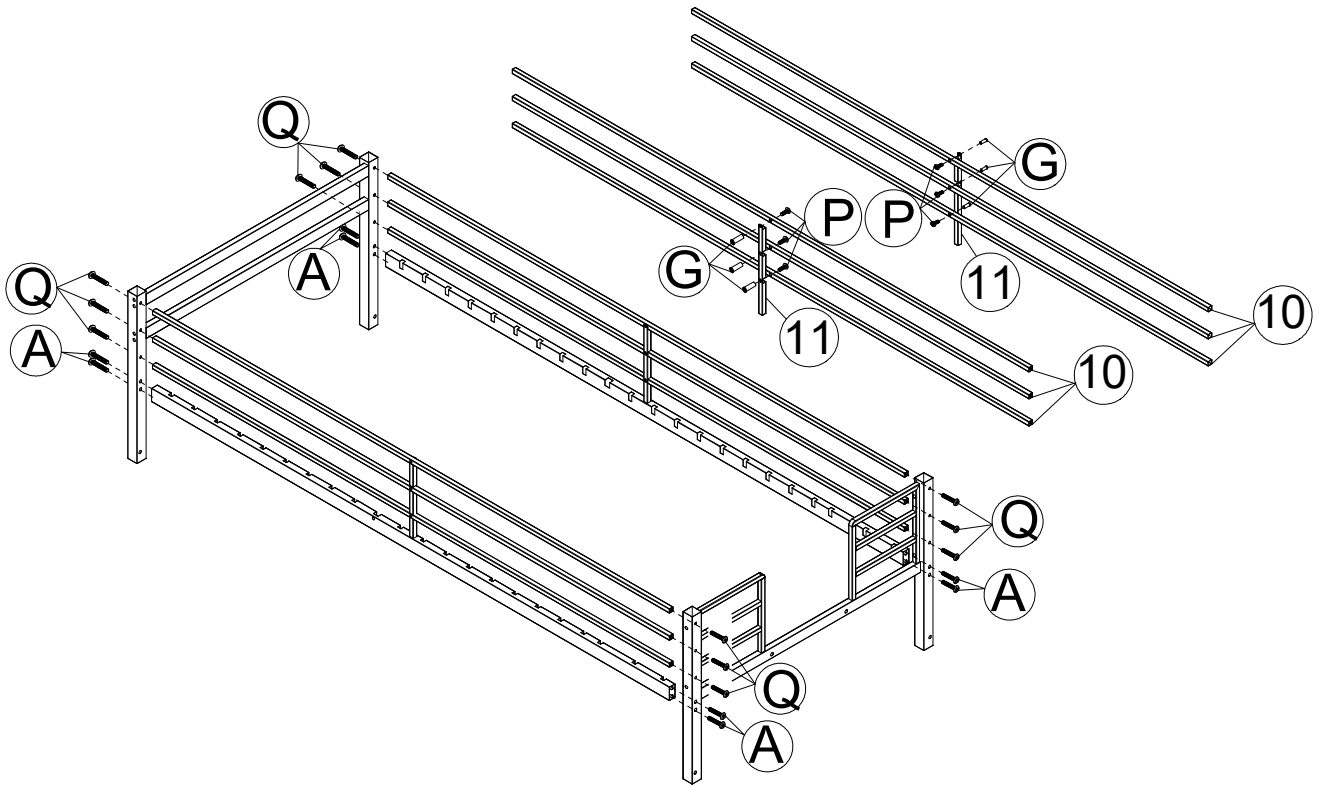

STEP6

N	10x20	42		M	16x16	2

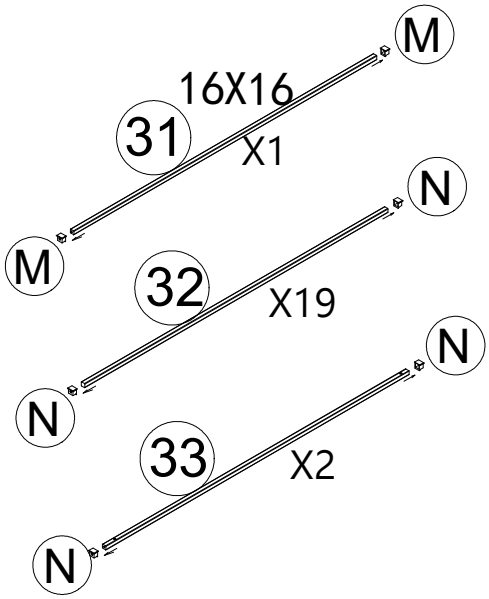

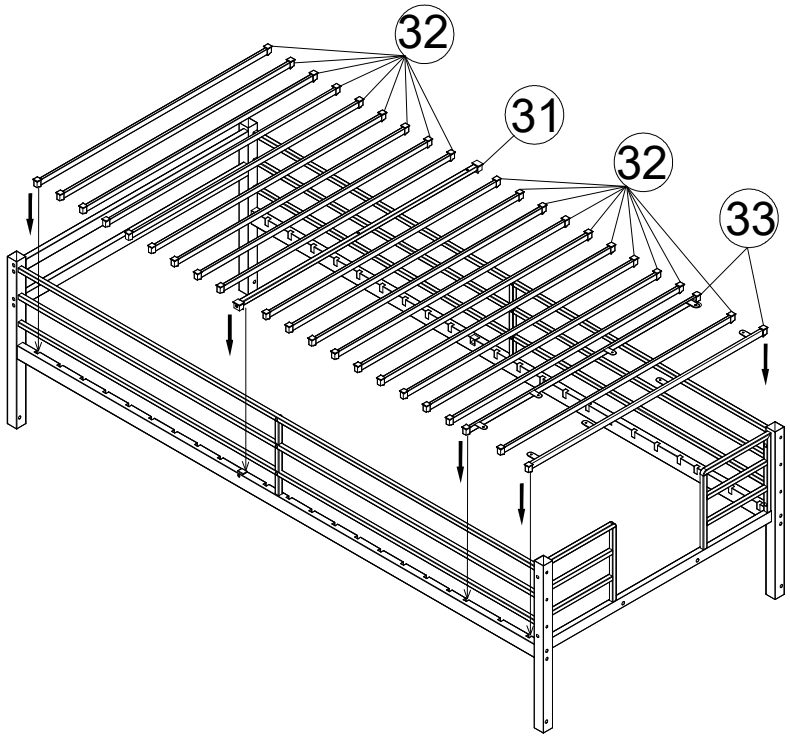

STEP7

F		M6x40	2		J		M6 Allen key	2

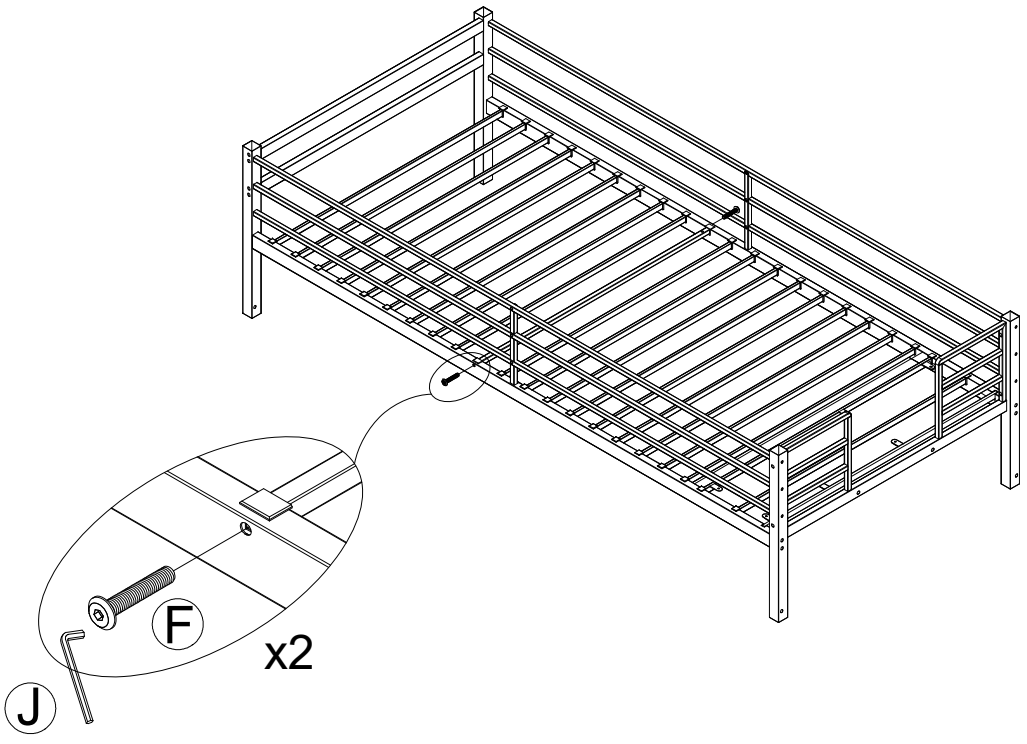

STEP8

R		M6x12 Screw	8
S	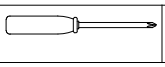		1

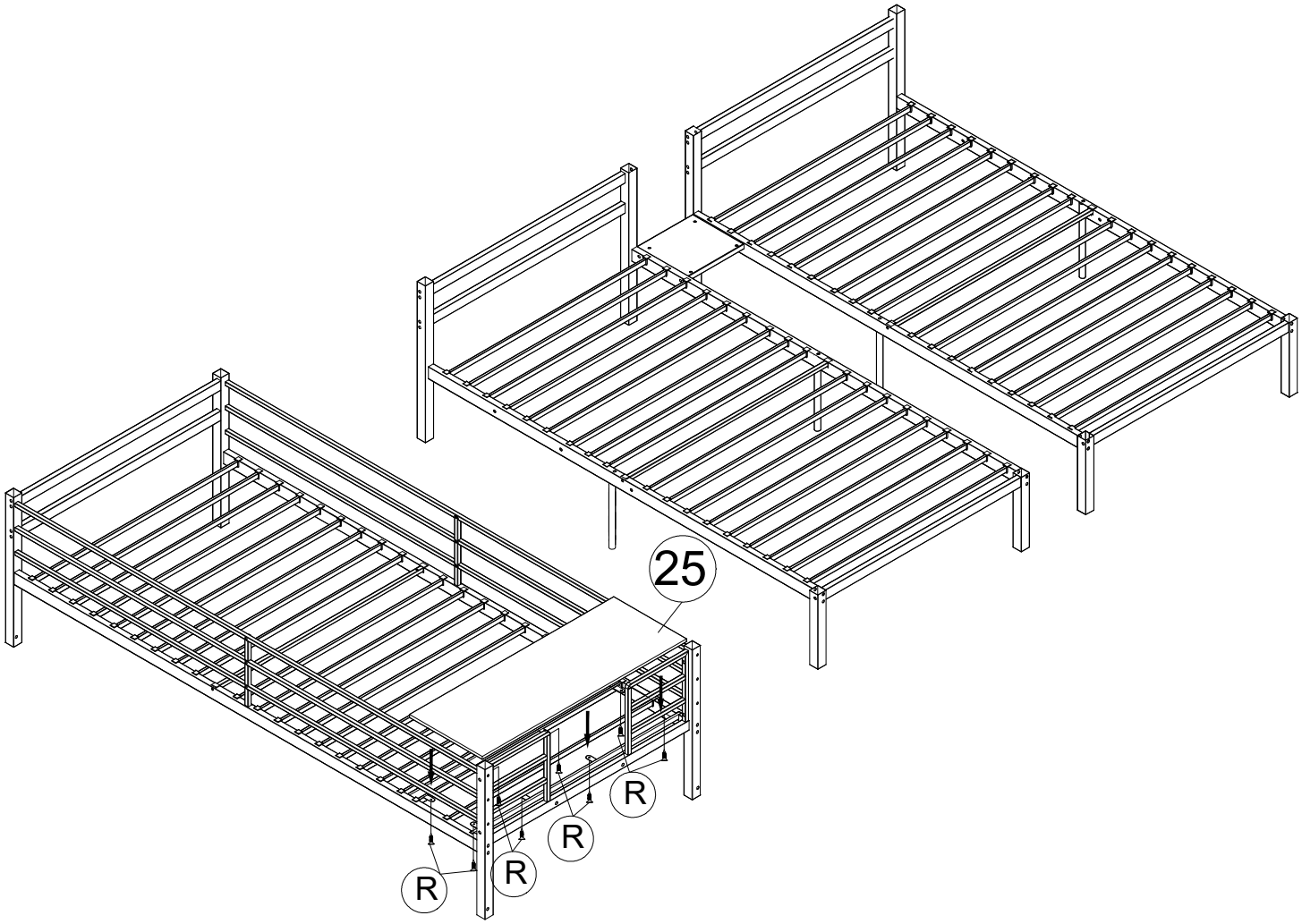

if you plan to become 3 dividual metal bed,please follow below step1 to 8 above . Otherwise please jump to step 9

STEP9

D		M8x30	2	H		M8x25	2

K	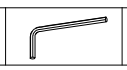	M8 Allen key	2

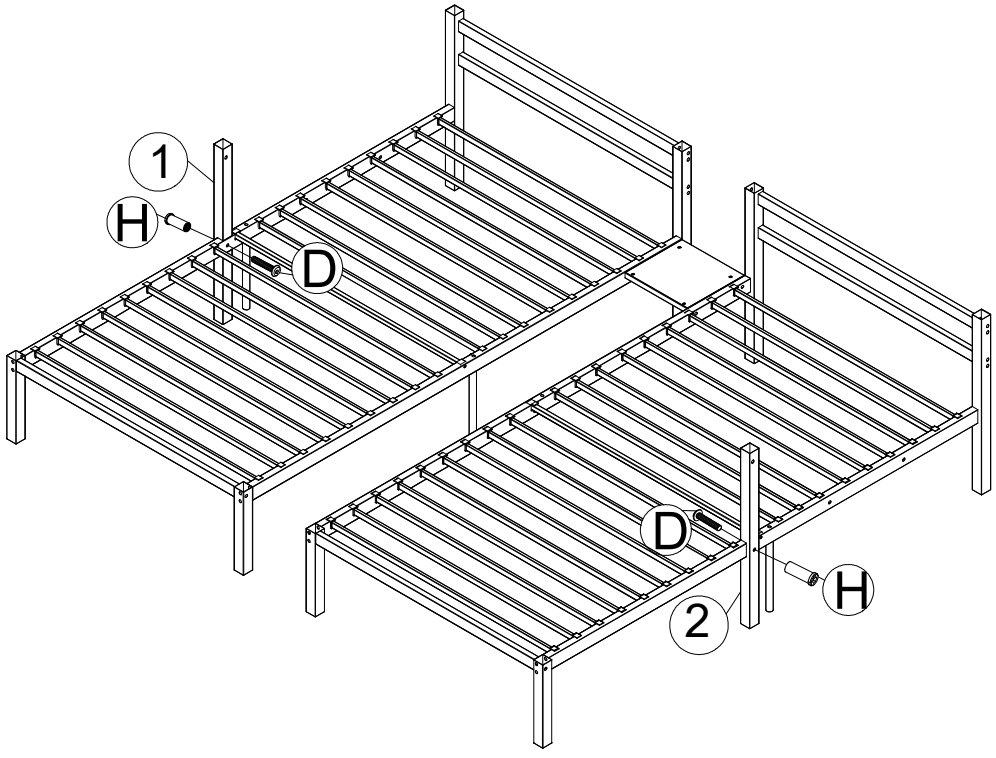

STEP10

D		M8x30	6	H		M8x25	6	K		M8 Allen key	2

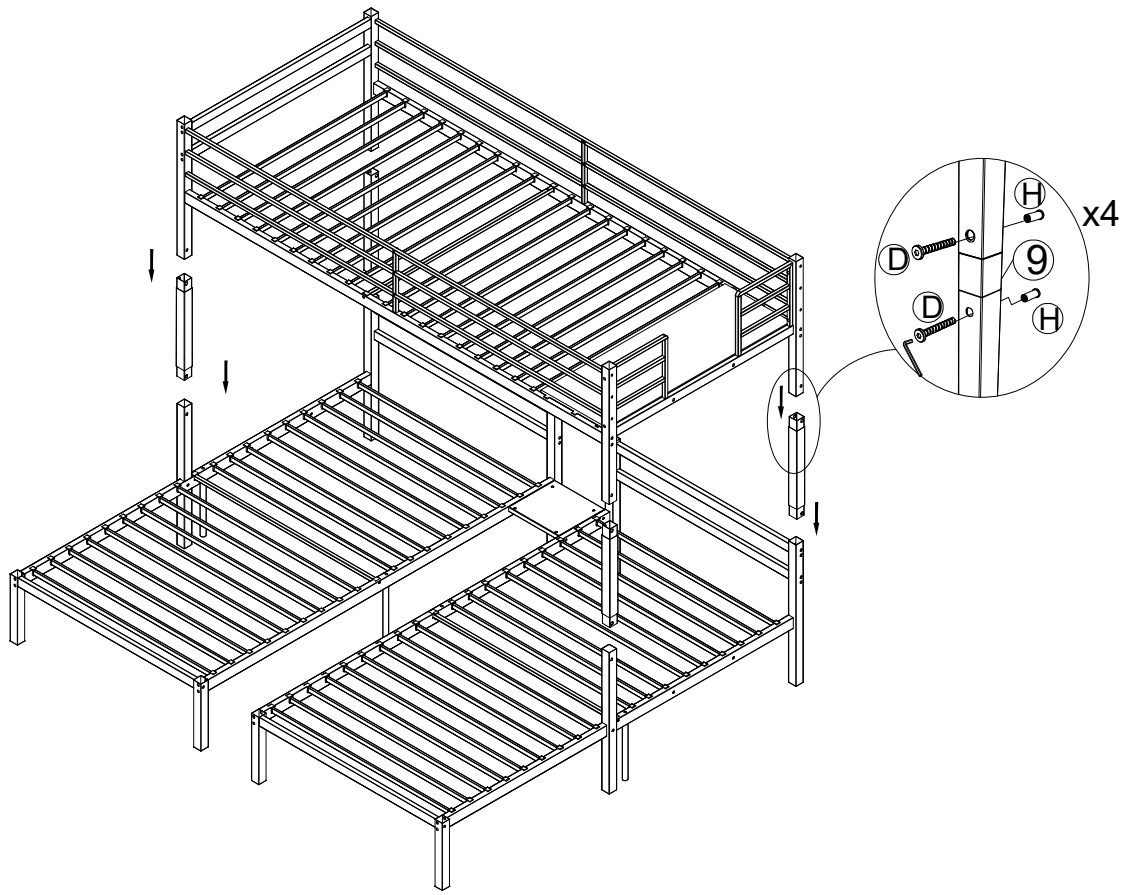

STEP11

E		M6x20	10	D		M8x30	4	K		M8 Allen key	2
H		M8x25	4	V		2	U		Anchor	4	
							T		M6x35 Screw	4	

REMARK: 11.1
Clean the sticking part and keep it clean before sticking the velcro, to avoid affecting the stickiness.

REMARK: 11.2
Tear off the white isolation paper on the back of Bubble Pads

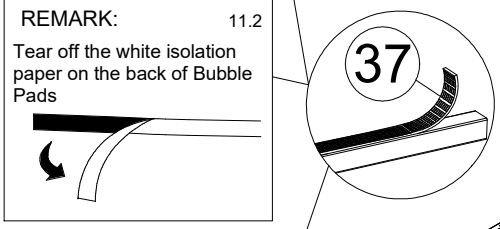

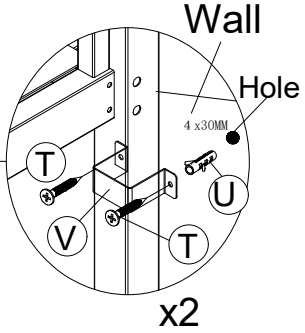

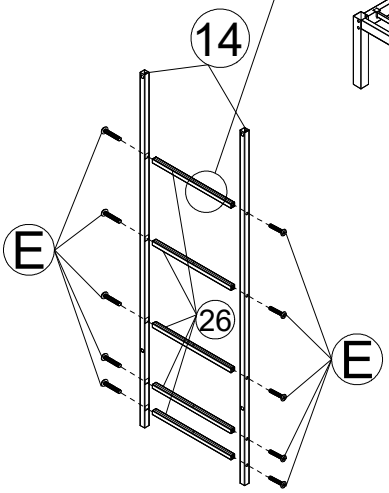

<1> Place the hook to your desired location
<2> Mark the hole location
<3> Drill the holes with Diameter 4 x 30 mm in depth.
<4> Inset the Anchor to the holes
<5> Fasten the screws together with washers as illustration shown

BUNK-BED ASSEMBLY INSTRUCTIONS

SAFETY WARNINGS AND GENERAL NOTES:

1. Follow the information on the warnings on the bunk bed end structure and on the carton. Do not remove the warning label from the bed.
2. Always use the recommended size mattress support, or both, to help prevent the likelihood of entrapment or falls.
3. Do not allow children under 6 years of age to use the upper bunk.
4. Periodically check and ensure the guardrail, ladder and other components are in their proper position, free from damage, and all connectors are tight.
5. Do not allow horseplay on or under beds.
6. Always prohibit jumping on the upper bunk.
7. Prohibit more than one person on the upper bunk.
8. Always use the ladder for entering and leaving the upper bunk.
9. Do not use substitute parts. Contact the manufacturer or dealer for replacement parts.
10. Use of a night-tight may provide added safely precaution for a child using the upper bunk.
11. Always use guardrails on both long sides of the upper bunk.
12. If the bunk bed will be placed next to a wall, the guardrail that runs the full length of the bed should be placed against the wall to prevent entrapment between the bed and the wall.
13. The use of water or flotation mattresses is prohibited.

STRANGULATION HAZARD–Never attach or hang items to any part of the bunk bed that are not designed for use with the bed.

14. Keep these instructions for future reference.
15. We recommend assembling your bunk bed on the shipping carton to protect your floor or carpet.
16. Be certain all staples are out of the box before beginning assembly on the shipping carton.
17. USE ONLY MATTRESSES WHICH ARE AS THE TABLE BELOW ON UPPER AND ON LOWER BUNKS.

Bed type	**Length**	**Width**	**Thickness**
Twin Standard	74" - 75"	38 ½"	6"

18. SURFACE OF MATTRESS MUST BE AT LEAST 5" (127MM) BELOW THE UPPER EDGE OF GUARDRAIL