Assembly Instructions

Caution : You must read this before you proceed

Care & Maintenance

- Not for commercial use. For residential use only.
- Furniture may scratch floors. We recommend using furniture pads to protect your floors.
- Do not put hot items directly on furniture surface.
- Do not clean furniture with harsh cleansers or polish.
- Do not place furniture under direct sunlight.
- Do not place furniture near heating or cooling vents.
- Do not write on furniture without a padded barrier to protect the surface.
- Do not place furniture outside . For indoor use only.
- Stains may be removed with mild soap solution and damp cloth.
- Children should not climb or jump on the furniture.
- Dust and pick-up spills using a clean, non-colored, lint-free cloth.

Please look in small carton for hardware packs and legs.
Sets often ship in multiple boxes and may arrive a day or two apart.

Sofa

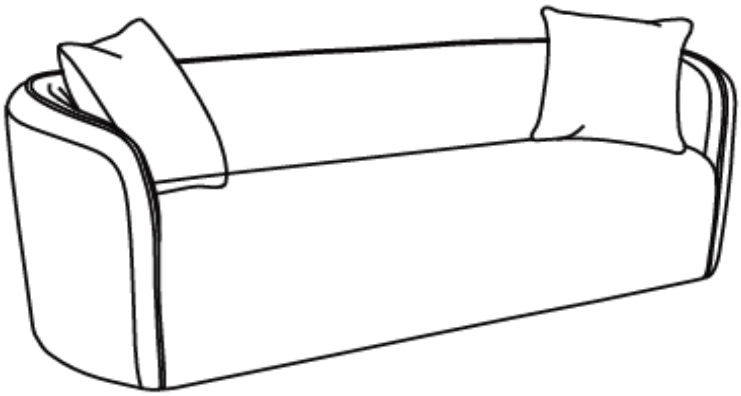

Parts List

Label	Picture	Description	QTY
A	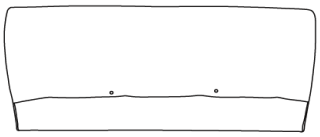	Backrest	1
B	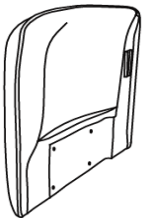	Left Armrest	1
C	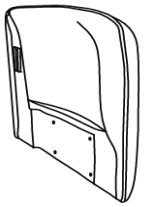	Right Armrest	1
D	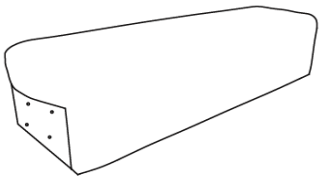	Seat	1
E		Pillow	2
Carton"A" N773P240653	A*1，D*1，		
Carton"B" N773P240634	B*1，C*1,E*2，Hardware*1		

Hardwares

Label	Picture	Description	QTY
①		Bolt (M8*70 MM)	11
②		Washer(M8*22)	11
③		Spring Washer(M8)	11
④		Allen Wrench	1
⑤		Bolt(M6*15MM)	5
⑥		Screw(5*16)	5
⑦		Tapered Connector	2

Assembly Preparation

Before Begining Assembly:

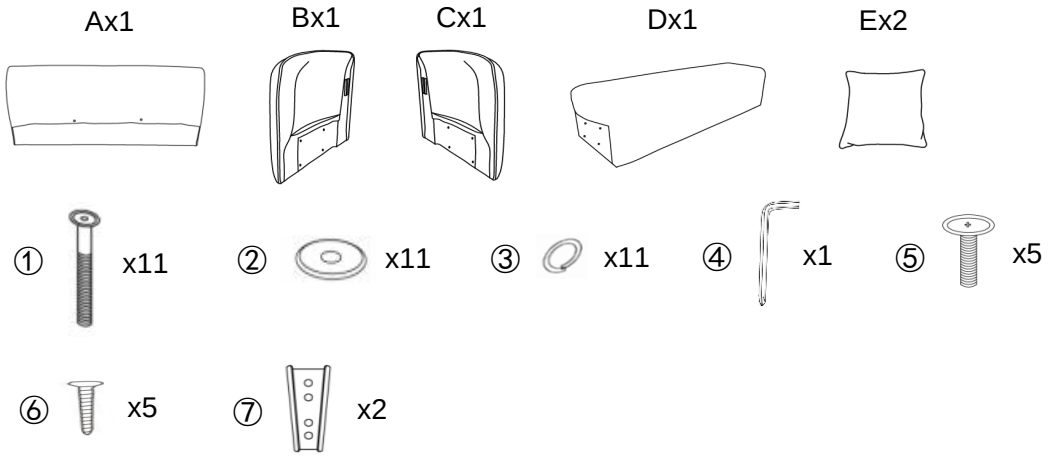

- Read instructions, cover to cover-
- Have 2 adults on hand for assembly-
- Do not assemble on flooring or carpet-
- Assemble on a clean non-marring surface (packing foam)-
- Save all packaging until finished-

Assembly Steps

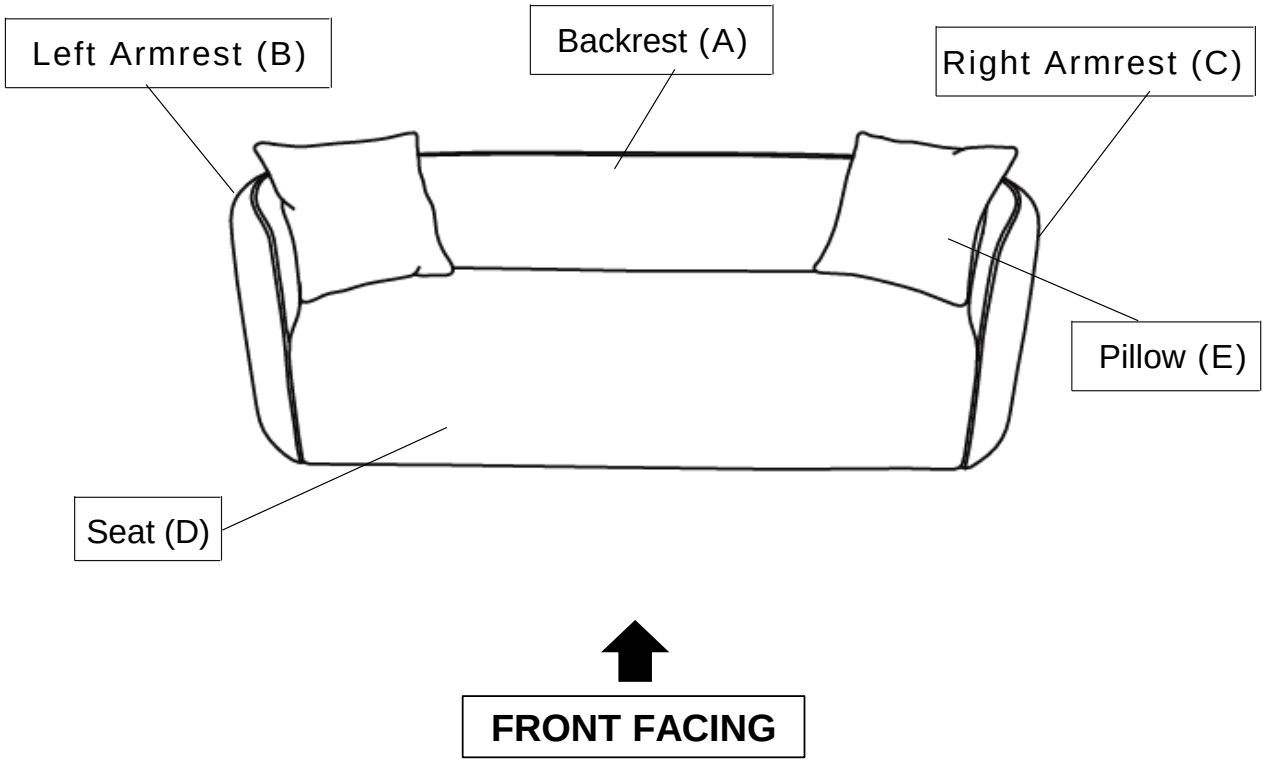

This Sofa has multiple parts and may require up to 30 minutes to assemble.
To give you an overview of the Sofa parts, the above picture is to help you put the various parts into perspective.
Please read through the instructions below to familiarise yourself with the parts and steps before assembly.
Note: It is recommended that you have an adult partner to assist during the entire assembly process.

Step 1

Carton"A"

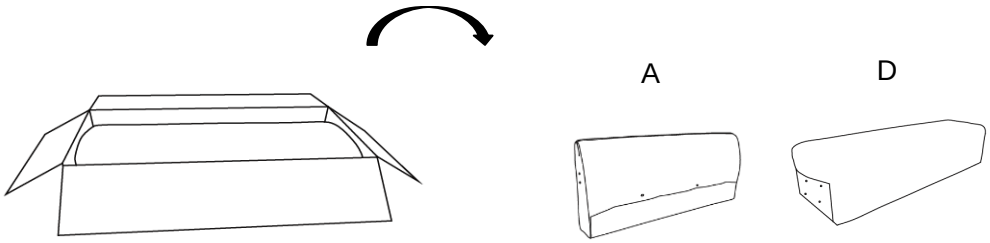

Take out the Backrest(A) and Seat(D) from the Carton"A",place it on a clean,non-marring surface.

Step 2

Carton"B"

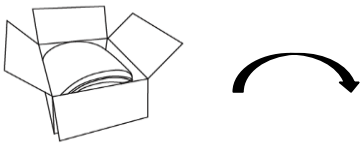

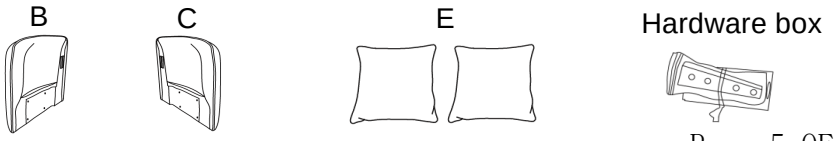

Take out the Left Armrest(B), Right Armrest©, Pillow(E) and Hardware box from the carton"B" and place them on a clean,non-marring surface.

Step 3

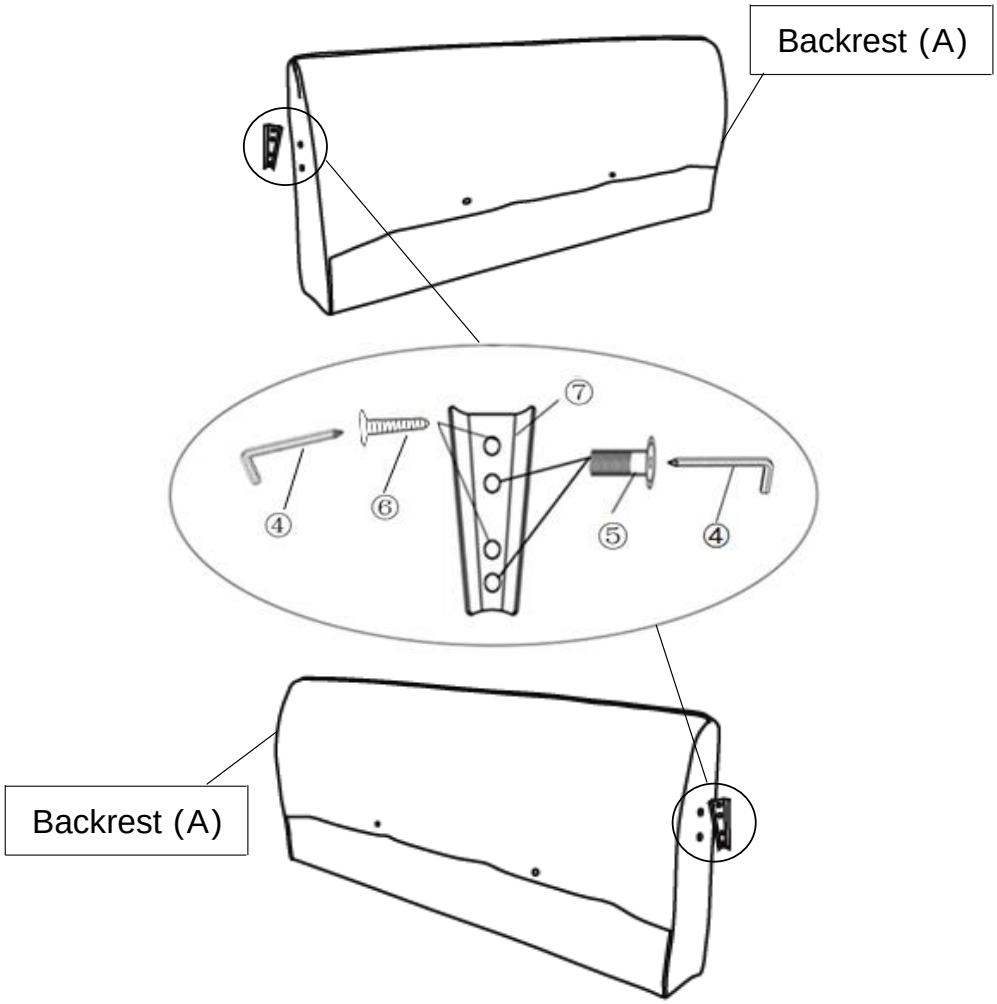

Attach Tapered Connectors(⑦) onto both sides of Backrest(A) using Bolts(⑤), Screws(⑥) with Allen Key(④) as indicated in the diagram above.

Note: Make sure the Tapered Connectors' larger side shall be upwards. Use Bolt(⑤) to fix into the second and fourth mounting position, use screws (⑥) to fix into the first and third mounting position. Tighten with Allen Key.

Step 4

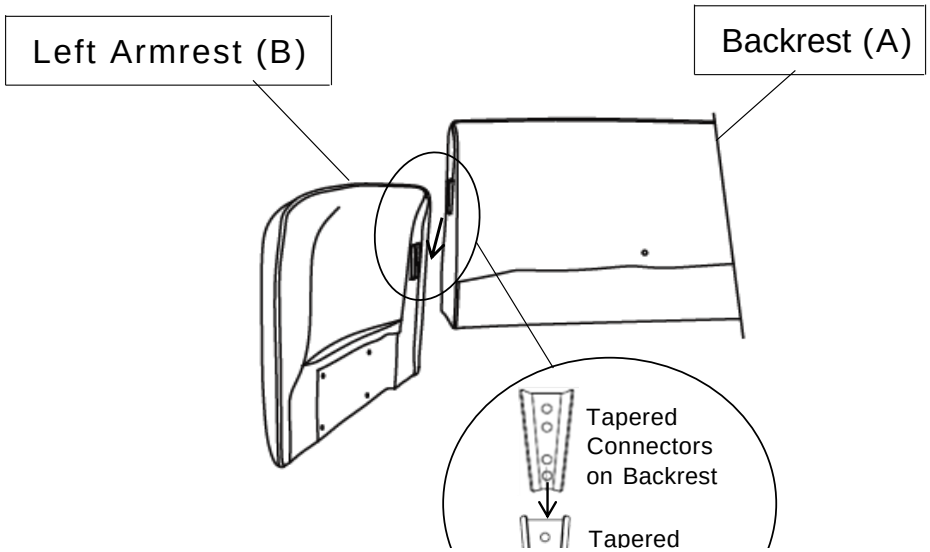

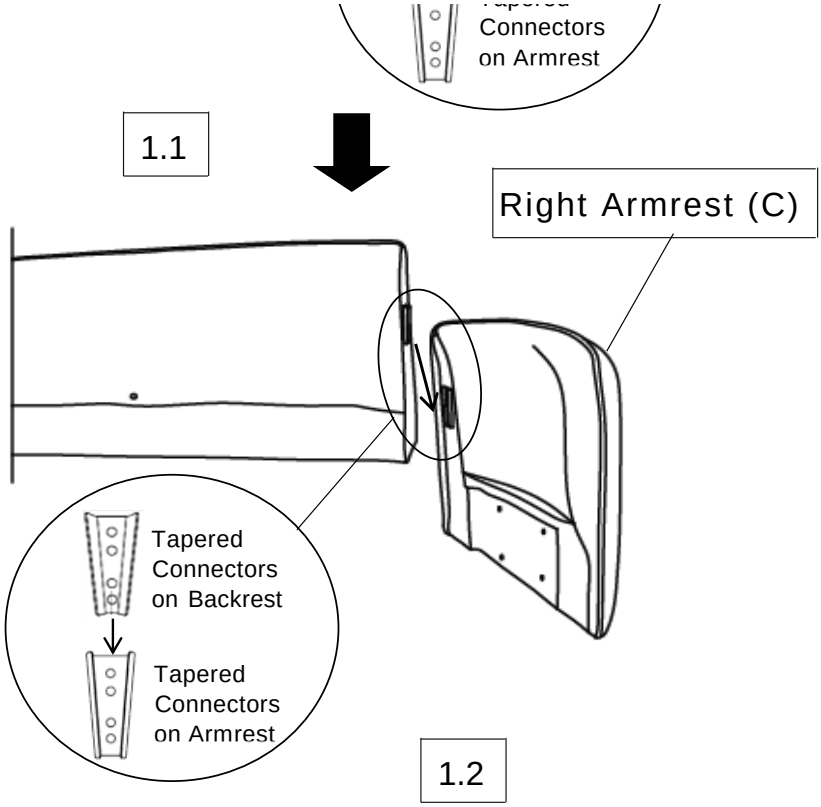

With the assistance from your adult partner:
1.1)Lift the Backrest(A) up,make sure the Backrest(A) is vertical and aligned to the Armrests.
Align the Tapered Connectors on the Backrest(A) with those on the Armrest(B&C).
Your adult partner may need to push the Armrests in towards the Backrest(A) to allow for better alignment.
Slip and Slide the Backrest,in a gradual and balanced manner into theTapered Connectors.
1.2)Push the Backrest(A) downwards until it is fully slotted and locked into position.
Note:Make sure the Tapered Connectors on the Backrest(A) lock into the Tapered Connectors on Armrest(B&C) .
Fully locked postion:Check and assess that the base of the Backrest(A) and Armrest(B&C) are aligned and level.

Step 5

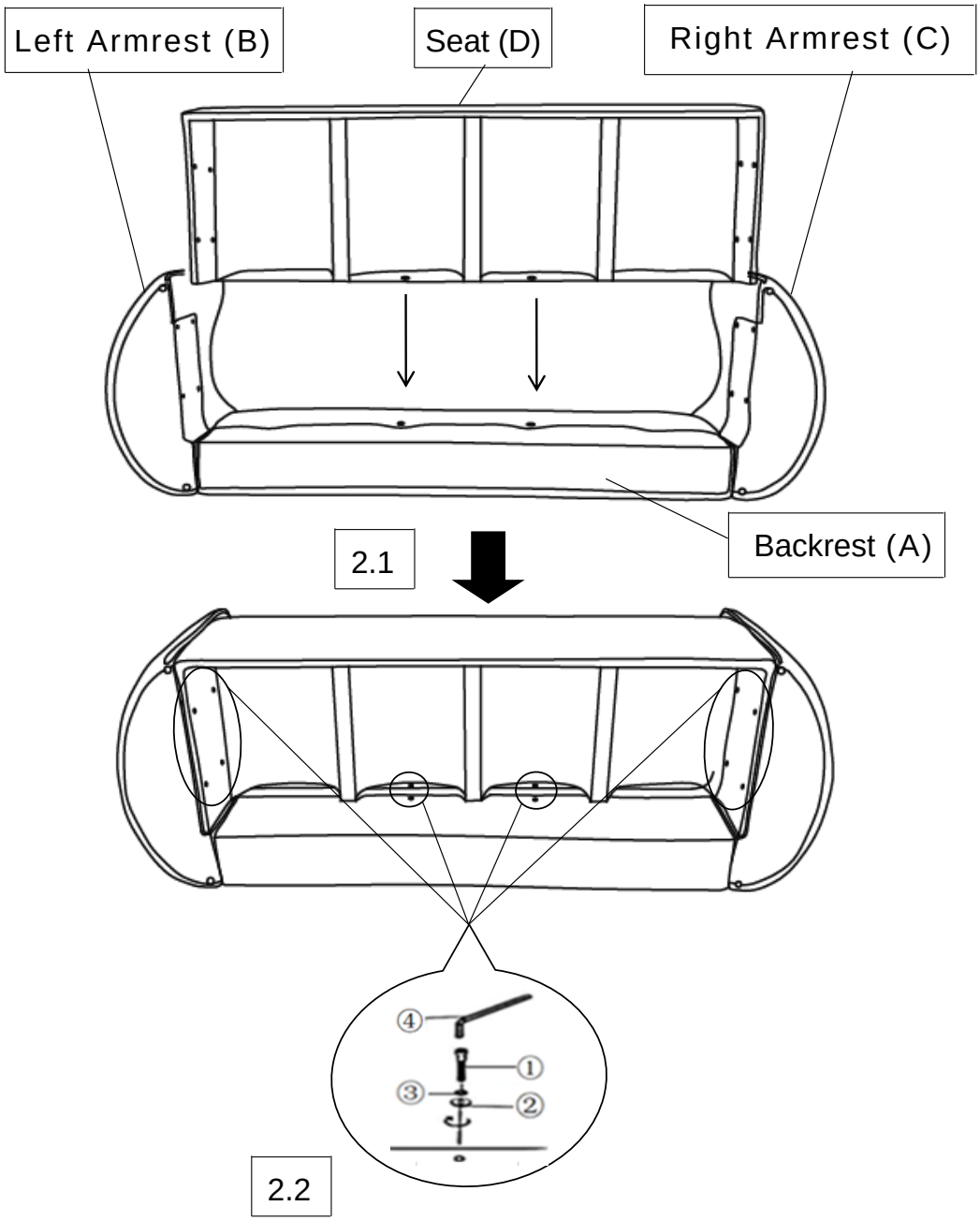

With the assistance from your partner.
2.1)Shown as above picture, Tilt and lay the STEP2 assembled parts on its Backrest(A) onto a flat surface.
2.2)Attach the Seat(D) to the Left Armrest(B) & the Right Armrest(C) & Backrest(A) using Bolts(①),Spring Washers(③), and Washers(②) with the Allen Wrench(④).
DO NOT fully tighten a Bolt in one go and then move on to the next.
Rather, In a sequential manner,gradually tighten each Bolt until all Bolts are evenly secured.
This methodology will ensure maximum evenness once all Bolts are fully tightened.
Note: Insert the bolts on the Armrest first, then go to Backrest. If you can not insert the Bolt into position on Backrest,please push the Backrest towards Seat bottom, make sure the Backrest bottom is leveling with Seat bottom.

Step 6

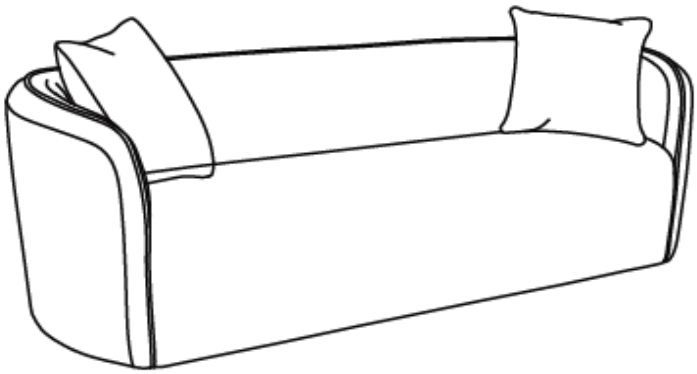

Place the Pillows(E) onto the Sofa.
Your Sofa is ready for use.
This Sofa can only be used on a flat, level surface.