ASSEMBLY INSTRUCTIONS
INSTRUCTIONS DE MONTAGE

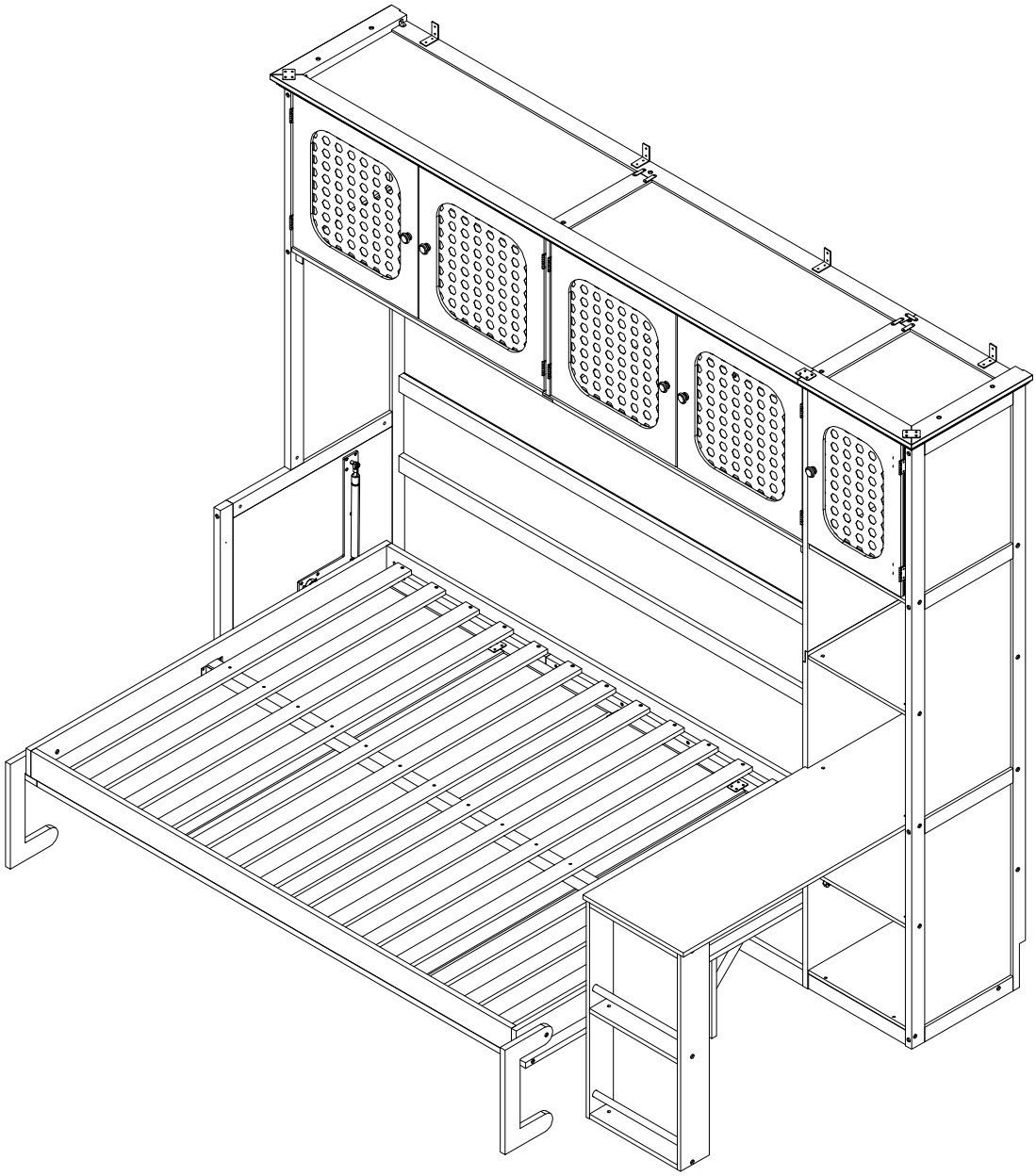

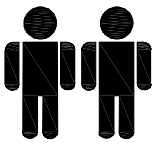

Two people are required to assemble and move this model.
Deux personnes sont nécessaires pour assembler et déplacer ce modèle.

Note: This bed must be equipped with a mattress e quivalent to 39 lb

Remarque : Ce lit doit être équipé d'un matelas équivalent à 39 livres

Important information to read before starting the assembly.
Keep this information for future reference.

IMPORTANT WARNNINGS

Risk of serious injuries if the wall bed tips over.
To prevent wall bed from tipping over, mount it permanently to the wall.
Only a qualified person* must carry out the installation and any possible adjustment of the wall bed (including disassembly). If the wall bed is not firmly mounted (anchored) to the wall, it might tip over and cause serious injuries to the installer, users of the bed as well as the people near the bed.
The choice of wall anchoring depends on the type of wall. Use wall anchors suitable for the wall material.

*Qualified person: it is necessary to have a good understandingof the wall structure where the bed is anchored, including the positioning of the wall studs and structural components in the case of a wood or metal structure. If you do not have the necessary skills, make sure that the installation is done by someone who has the qualifications and required knowledge. When you choose the installer, make sure to comply with all applicable regulations in the province, state or conuntry where the furniture is installed.

Informations importantes à lire avant de commencer l'assemblage.
Conservez ces informations pour référence future.

AVERTISSEMENTS IMPORTANTS

Risque de blessures graves en cas de basculement du lit escamotable.
Pour éviter tout basculement, fixez-le de manière permanente au mur.
Seule une personne qualifiée* doit effectuer l'installation et tout éventuel réglage du lit escamotable (y compris le démontage). Si le lit escamotable n'est pas solidement fixé (ancré) au mur, il risque de basculer et de provoquer de graves blessures à l'installateur, aux utilisateurs du lit ainsi qu'aux personnes à proximité.
Le choix du système de fixation dépend du type de mur. Utilisez des ancrages adaptés au matériau du mur.

*Personne qualifiée: Il est nécessaire d'avoir une bonne compréhension de la structure du mur où le lit est ancré, y compris la position des montants et des éléments structurels dans le cas d'une ossature en bois ou en métal.
Si vous ne possédez pas les compétences requises, assurez-vous que l'installation est réalisée par une personne qualifiée et possédant les connaissances nécessaires. Lors du choix de l'installateur, veillez à respecter toutes les réglementations en vigueur dans la province, l'État ou le pays où le meuble est installé.

⚠ SAFETY FIRST: WALL ANCHORING IS NON-NEGOTIABLE

MURPHY BEDS MUST BE SECURELY ANCHORED TO STRUCTURAL MEMBERS. NEVER MOUNT SOLELY TO DRYWALL. IMPROPER INSTALLATION CAN CAUSE SERIOUS INJURY OR DEATH.

⊘ ABSOLUTELY FORBIDDEN HARDWARE

PLASTIC ANCHORS - WILL FAIL

A. WOOD STUD WALL

HOW TO IDENTIFY

KNOCK ON A HOLLOW WALL

STUD FINDER TOOL (WITS

STUDS SPACED IS 16" STUD

REQUIRED HARDWARE

HEAVY-DUTY SCREWS (MIN. 5/32" DIA., 2.5" LONG)

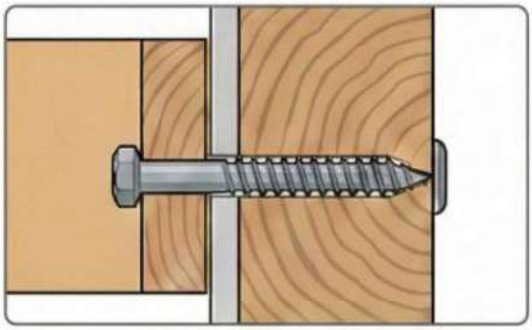

MUST PENETRATE WOOD STUD CENTER AT LEAST 2.5"

B. MASONRY/CONCRETE WALL

HOW TO IDENTIFY

KNOCK ON A SOLID WALL

DRILL BIT CREATES GREY/RED DUST

REQUIRED HARDWARE

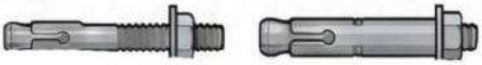

ALL-METAL EXPANSION BOLTS (MIN. 5/32" DIA., 2.5" LONG)

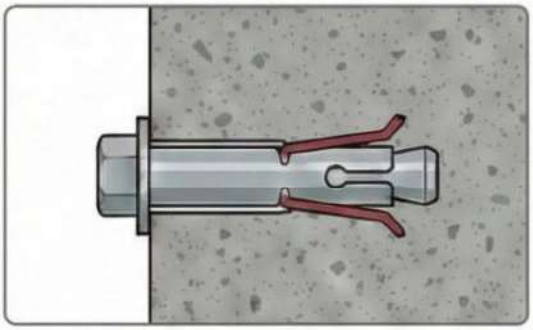

CLEAN HOLE OF DUST. DO NOT USE PLASTIC.

☑ FINAL SAFETY CHECKLIST

- ☑ VERIFY STUD CENTER BEFORE DRILLING
- ☑ ENSURE FLUSH WALL FIT (ADJUST BASEBOARD)
- ☑ PERFORM PULL TEST BEFORE MATTRESS LOAD
- ☑ AVOID HIDDEN WIRES/PIPES BEFORE DRILLING
- ☑ REGULARLY INSPECT AND MAINTAIN WALL ANCHORS
- ☑ CONSULT A PROFESSIONAL FOR WALL ASSESSMENT AND OPTIMAL HARDWARE; CUSTOMER ASSUMES ALL INSTALLATION LIABILITY

IMPORTANT INFORMATION PACKAGE.

THIS INFORMATION PACKAGE CONTAINS WARNING AND PRODUCT SAFETY INFORMATION. DO NOT PROCEED WITHOUT REVIEWING THOROUGHLY.

A. WARNING LABELS.

Your purchased Murphy Bed is delivered to you with WARNING LABELS to constantly remind you to take and adopt Safety Measure throughout the entire assembly and mounting points of the Bed to the walls.

DO NOT REMOVE these labels.

These Warning Labels serve as a Reminder Tool for visiting friends and relatives when using the Murphy Bed to ensure Safety Precautions are taken.

WARNING.

IMPORTANT SAFETY REQUIREMENTS - Bed Attachment to Wall.
For Your Safety, the Murphy Bed MUST BE ATTACHED to the Wall.

Seek Certified Professional Consultant / Contractors for their Services to:
1.) DETERMINE the WALL Type in Your Home;
2.) PRECISE HARDWARE that suits to the Wall Type in Your Home;
3.) INSTALL / ATTACH of the Murphy Bed to the Wall in Your Home;
4.) VALIDATE the Murphy Bed is appropriately and securely installed/attached.

The choice of wall anchoring hardware depends on the type of wall. This Murphy Bed is delivered with HARDWARE SCREWS suited for attachment to WOOD STUDS in walls and hardware fittings suitable for fixing on CONCRETE SOLID walls. Please select the correct wall-fixing hardware. Any STUDS type detected with your Consultant-Contractors to be NOT WOOD STUDS or CONCRETE SOLID WALLS - DISCARD and DO NOT USE these SCREWS. Use the hardware suitable for your wall material.

Seek the professional advice of your Consultant-Contractor and procure the appropriate hardware and brackets for the attchment of the Murphy Bed to the Wall.

FAILURE TO ADHERE TO THE ABOVE INSTRUCTIONS MAY RESULT IN SERIOUS and/or SEVERE INJURIES or Death caused by the detachment of the Murphy Bed from the Wall.

SAFETY PRECAUTION :

1.) **MAXIMUM Mattress Weight** suited to your Murphy Bed **:** 39 Lbs (18kg) .
   MAXIMUM mattress thickness: 5-8 inches (12.7-20.3 cm).
2.) **ENSURE ADULTS ONLY** throughout the entire assembly and attachment.
3.) **KEEP ALL Children, Non-Ambulatory persons and Pets** at bay during the entire assembly and attachment.

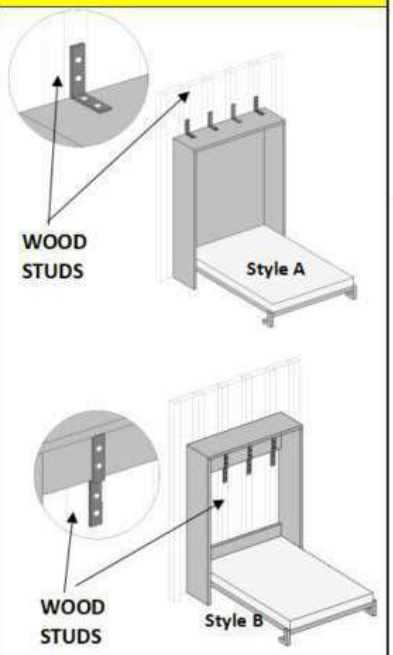

WOOD STUDS walls - Locking wall illustration

LINE ART for Reference only and **NOT DRAWN TO SCALE.**

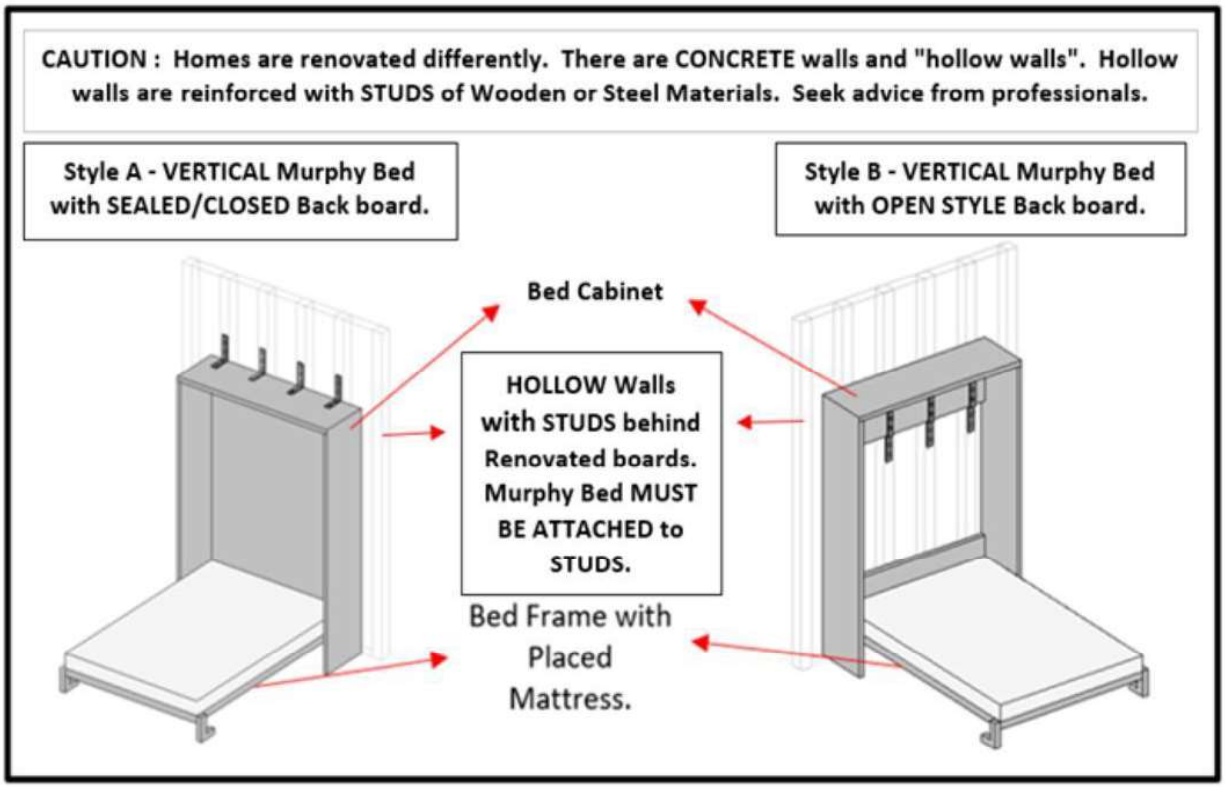

B.) SAFETY REMINDERS.

MARKINGS in WALL – WHERE TO ATTACH the MURPHY BED.

Irrespective of the wall type, whether Solid Concrete Walls OR Decorative Walls with WOODEN Studs OR Decorative Walls with Metal Studs, ensure that

a.) you choose a professional installer who has a good understanding of the wall structure where the Murphy Bed is anchored, including the position of the wall studs and structural components in the case of a wood or metal structure.
b.) precise markings of the positions of the anchor points are to be made on the wall for easy identification during the Murphy Bed attachment to the wall.
c.) the relevant and appropriate Hardware with Metal Brackets are READY for this attachment and are within easy access for prompt and efficient attachment.

This product requires Professional Consultation and Installation*.

* When you choose the professional installer, make sure to comply with all applicable laws, regulations and rules in the city, state or country where the Murphy Bed is installed.

To have your Murphy Bed fully assembled and to achieve its intended functionality – you MUST READ through this entire Assembly Instructions Manual before you start the assembly of the bed

1.) There are numerous Safety Issues and Safety Precautionary Actions that you MUST KNOW before you start the Assembly.

2.) CAUTION - Failure to FOLLOW / ADHERE to the GUIDE, WARNING AND REMINDERS here, may result in serious / severe injuries or death.

3.) PRECAUTION : For the assembly, Adult Partners only, to assist in the entire assembly. Ensure at least 3 (three) ABLE BODIED PERSONS ONLY in the entire assembly and attachment of this Murphy Bed to the walls of your home.

4.) CAUTION : During the entire assembly process and attachment of the Murphy Bed to the walls of your home, Keep ALL Children, Non-Ambulatory Persons and Pets completely at bay.

6.) SAFETY REMINDER on / to : Personal, Family Members and Pets. The Murphy Bed may be shipped to you in 3 to 5 packages and are HEAVY. Each carton holds many parts and components. Some of these components eg., bolts and screws are relatively small* in size.

*. During the assembly process, ensure that any misplaced bolts and nuts are picked up so that Children and / or Pets do not play or ingest these.

7.) This Murphy Bed is intended for ADULT USE ONLY.

8.) This Murphy bed is delivered with pre-installed hardware for the wood studs and the concrete solid wall - please choose the appropriate hardware according to the type of the wall.

9.) Your Home's Wall Type - Every home is renovated differently with different wall(s) type / finishes. Before you proceed to assemble your Murphy Bed :

a.) SEEK and CONSULT Professional Services to ascertain the wall type in the designated location where you intend to attach the Murphy Bed;
b.) ENSURE the Consultant-Contractor specifically INFORMS you of the WALL TYPE in the designated spot where you intend to attach the Murphy Bed.
c.) ENSURE the Consultant INFORMS you specifically on the matching and relevant Hardware / Brackets to secure and attach the Murphy Bed to the wall.

10.) WARNING – YOU MUST HEED THE INSTRUCTIONS given by your appointed Consultant-Contractor on the :

a.) Mounting Hardware Type that suits the wall(s) type - where / when it is NOT WOOD STUDS or NOT CONCRETE SOLID WALL, the pre-packed hardware not match/ not fit.
b.) Number of Mounting Points for the Murphy Bed to the Wall.

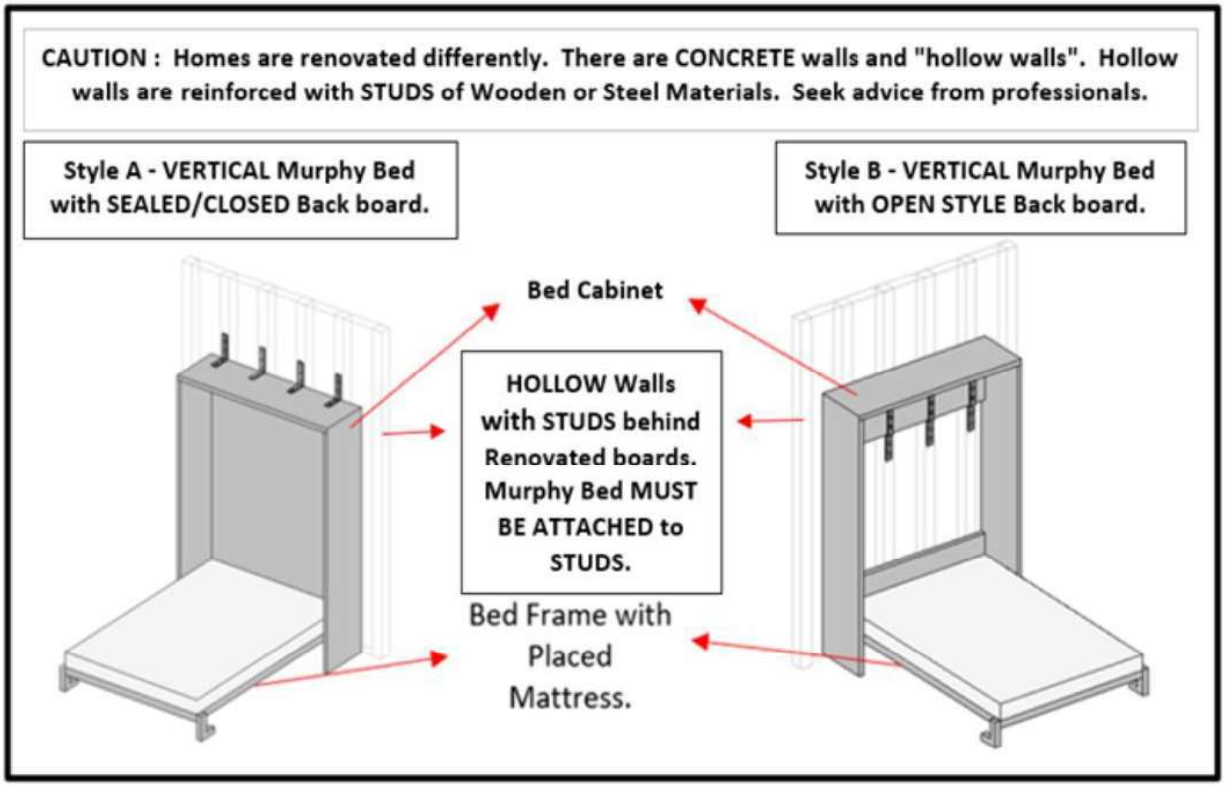

11.) This Murphy Bed is designed for home use and not intended for commercial use.

12.) This Murphy Bed is not intended to be moved, modified, uninstalled or disassembled once professionally installed.

C.) MOUNTING INFO & HARDWARE.

1.) REMINDERS :

a.) In the event, that this pre-packed Screws Set does not match to the walls in your home – DO NOT USE / DISCARD these hardware.
b.) ADHERE to the Professional Consultant-Contractor instructions and information on the RELEVANT mounting hardware that suits your wall.
c.) Procurement of these RELEVANT hardware is an arrangement made between your Consultant-Contactor and you.

2.) A step ladder (not provided) is needed to attach the L-Brackets to the wall, at the Top of the Murphy Bed. DO NOT lean against the Top of the Murphy Bed, it may cause sagging.

Murphy Bed Style A

L-Bracket Fixture to Wood Studs

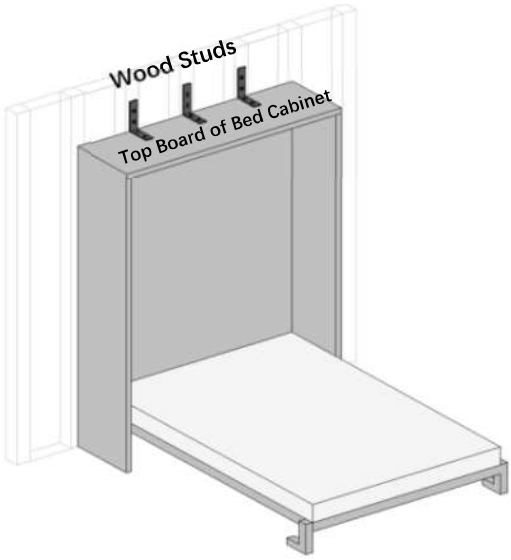

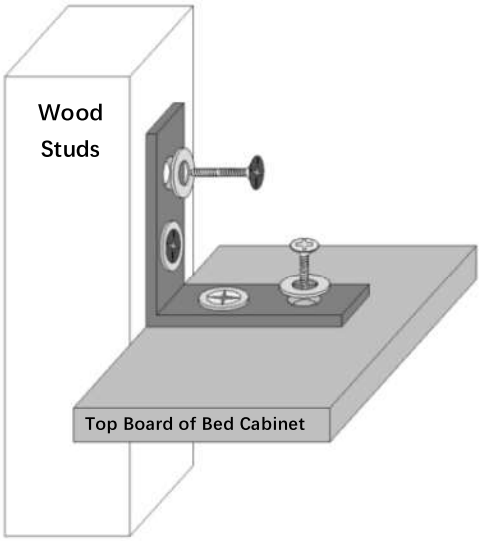

Z-Bracket Fixture to Wood Studs

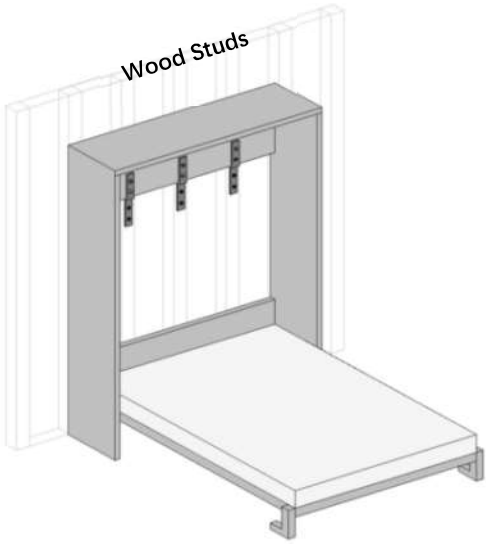

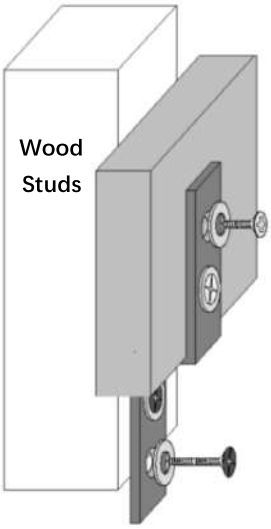

D.) IDENTIFICATION of TOOLS and ATTACHMENT SKILL.

The parts and components to assemble the Bed Frame are stated in the Assembly Instructions. Follow the instructions with attention.

For an efficient assembly, after opening the cartons shipped to you :

a.) open and layout all parts and components in sequence;
b.) account for every part, hardware and component;
c.) then lay out the parts close to each other;

Assemble and tighten each bolt / nut / screw up to 80% to allow for the Bed Frame and Bed Cabinet to be HELD together.

Upon FINAL assembly where all the parts and components are FITTED precisely, in a sequential manner – proceed to tighten each bolt & nut & screw gradually.

CAUTION :

1.) The METAL PLATES to the sides of the Side Rails – MUST BE FULLY and SECURELY TIED to the SIDE RAILS.
2.) The Piston L-Brackets that are attached to the INNER WALL of the Bed Cabinet – MUST BE FULLY and SECURELY TIED to these Inner Walls.
3.) These Metal Plates and the L-Brackets – are the components that are holding the Pistons that allow your Bed to "travel" to an OPEN or CLOSED position.
4.) Frequent Inspections of these Metal Plates / Brackets and Pistons Bolts, up to Once a Month – to ascertain these DO NOT BECOME LOOSE. For if these bolts to the Bed Frame and or Bed Cabinet or Pistons are loose, may cause the BED FRAME to become DISLODGED and cause injuries.

REMINDER : NEVER FULLY TIGTHEN any screw / nut or bolt in one session. If you DO TIGHTEN the hardware all the way into the core of the wood, this cause the parts to become skewed that would impact other parts of the item not being able to be aligned to its mounting points for assembly.

E. ALL ASSEMBLY WORKS REQUIRES A TEAM OF NO LESS THAN 3 ADULTS.

Reminder : Per above info, the cartons and products are heavy – therefore exercise CAUTION at all times and ENSURE YOUR TEAM OF 3 for the entire ASSEMBLY.

F.) ASSEMBLY OF BED CABINET.

Identify all parts and components for the Bed Cabinet.
Assemble the Bed Cabinet according to the Assembly Instructions.

Upon the completion assembly of the Bed Cabinet, make a final inspection that all joints and parts are fully and securely attached.

CLEAR all debris in the area where your Murphy Bed is going to be attached to the wall.

Move this FULLY ASSEMBLED BED CABINET and position this BED CABINET some 2feet to 3 feet away from the designated Wall, where you have previously made markings.

SAFETY REMINDER – The Cabinet is NOT ATTACHED TO THE WALL, YET. From here on - YOU MUST HAVE 2 ADULT to HOLD and STABILISE this BED CABINET, to prevent the Bed Cabinet from TIPPING OVER.

G.)THE FIXATION OF THE BED CABINET

Fix the bed cabinet to the wall using wall-mounted hardware, and check to ensure that the bed cabinet is securely fastened to the Wood Studs or Concrete Solid Wall.

REMINDER : FOLLOW the INSTRUCTIONS from your Professional Consultant / Contractor.

SEQ	Bed Description	Bed Size	Details.
1	Single/Twin(XL)	~38*75/80~ inches	Attach at least 2 pieces of L or Z Hardware onto the Wall or Studs;
2	Full	54*75inches	Install at least 3 pieces of L or Z Hardware onto the Wall or Studs;
3	Queen	60*80inches	Install at least 3 pieces of L or Z Hardware onto the Wall or Studs;
4	King	76*80inches	Install at least 4 pieces of L or Z Hardware onto the Wall or Studs;
5	Other Bed Size		Other Bed Sizes - seek advice from your Contractor

H.) ASSEMBLY of BED FRAME.

Identify all parts and components for the Bed Frame.
Assemble the Bed Frame according to the Assembly Instructions.

Upon completion of assembly of the Bed Frame, make a final inspection that all joints and parts are fully and securely attached.

I.)ATTACHMENT OF BED FRAME TO BED CABINET.

Using the lifting hardware (compressed pneumatic/hydraulic rods and other hardware fitting), follow the installation instructions to securely connect the bed frame and the bed cabinet together. This process requires at least 3 (three) adults.

You may need to – LIGHTLY slide forward-backward to adjust and create gap space so as to enable the Pistons to be hooked to both ends of the hanging bolts in the Inner Wall of the L-BRACKET

Fully Secure and Tighten these Bolts at each end of the Pistons.

J.) Attachment of Safety Latches.

Upon completion of Step I above, ensure the entire structure of Bed Frame to Cabinet is fully and securely attached as ONE UNIT – affix the Safety Latches.

These Latches are to be reachable by Adults Only. Thus, the minimum height shall be no less than 5feet (1.5m) from ground.

K.) Warning for Selecting a Mattress

Recommended Mattress weight ( )lb or ( )kg / Recommended Mattress thickness ( )in or ( )cm - Your Murphy Bed is made having taken into consideration the Bed Frame Weight and Mattress weight to pair with the Pistons Newton Force.

Therefore, load your bed with the RECOMMENDED MATTRESS Weights, Size and Thickness as stated here in the assembly instructions.

DO NOT LOAD any heavier and or LARGER and or LIGHTER Mattress than what is recommended here.

L.) MATTRESS PLACEMENT.

Have 1 to 2 persons – place equal strengths to the handles and gently and securely, PULL DOWN the Bed Frame until the Bed Frame is horizontally and level to the ground.

Have the other 2 persons – carry and place the Mattress (within the recommended weight and thickness) and gently place the Mattress on to the Bed Frame.

M.) PISTON NEWTON-LOAD STRENGTH.

You are hereby reminded that when the BED FRAME is EMPTY OF MATTRESS, the Bed Frame may NEED a STRONGER force to be pulled down before you can place the Mattress.

This RESISTANCE to be PULLED DOWN is a normal characteristics of the Pistons Newton-Load force is “in action”.

N.) BED STRAP – GUIDE STRAP

Your Murphy Bed may or may not come equipped with a Bed Strap.

This Bed Strap serves as a GUIDE STRAP to help you lift the Bed Frame some 6 inches or so off its resting position. Then use both hands to FULLY LIFT HOIST the Bed Frame to its closing position.

SAFETY REMINDER :

1.) DO NOT USE THE BED STRAP to PULL DOWN TO OPEN the BED FRAME from its CLOSED POSITION.
2.) DO NOT USE THE BED STRAP to PULL-LIFT-HOIST the BED FRAME from the OPENED-HORIZONTAL position, to the CLOSED POSITION.

Both the above may cause injury and or unnecessary strain to your arm(s).

O.) USING YOUR MURPHY BED.

For EVERY USE – exercising Safety Precautionary Measures to ensure the safety of your family members and pets are IMPORTANT.

Therefore, PRIOR TO OPENING / PRIOR TO CLOSING OF YOUR MURPHY BED - Make sure all Children / Non Ambulatory Persons and Pets are at bay.

KEEP CHILDREN and NON-AMBULATORY persons from Unlatching the Safety Latches.

P.) CAUTION : DO NOT BE DISTRACTED During EVERY OPENING and CLOSING of your Murphy Bed.

Every time you Pull to OPEN the Murphy Bed from its closed position OR Lift-Pull to CLOSE the Murphy Bed to stow it into the Bed Cabinet -

- give these actions your focused and dedicated attention.
- DURING EVERY OPENING and CLOSING of your Murphy Bed - always ensure you have an Adult Partner close by for added assistance, where necessary.
- DO NOT OVER EXERT ADDED FORCE to OPEN the Bed or to CLOSE the Bedframe. For if you do, the resistance of the Piston will only make it harder for you to complete the task.
- TO CLOSE the Murphy Bed : depending on your height – stand some 6inches to 10inches away from the FootBoard edge. Use both your hands and place both hands at about equal distance from the middle of the Bed Frame, spaced at 2 to 3 feet between your hands - GENTLY LIFT-PULL to Close your Murphy Bed.
- TO OPEN the Murphy Bed : using equal force – place your hands to the installed grab handle and GENTLY PULL towards you to Open. As you pull Open the Murphy Bed – proceed to move backwards, slowly and steadily, so as to give way to the Murphy Bed's OPEN Position.

- During EVERY OPENING or CLOSING of the Murphy Bed - at about your hip level - you may find that you need to rotate your hand / wrist - take caution here to prevent injury.

- During EVERY OPENING and CLOSING, keep Children and Pets and Non Ambulatory Persons at bay.
- NEVER allow your children to treat this Murphy Bed as a Hide and Seek place of fun or jump on the bed.
- Care & Maintenance - Depending on the frequency of use of your Murphy Bed, it is recommended that you take precautionary Care and Maintenance. It is advisable to conduct NO LESS THAN 2 to 3 checks annually on these mounting points & pistons to ensure that these are securely bolted. Where necessary, use a vacuum cleaner to clear all dust and then wipe down with a damp cloth, then proceed with your maintenance work.

Safety Latches - Your Murphy Bed comes with the Safety Latch. These are to be attached at, both the TOP LEFT and TOP RIGHT hand upper portion, minimum of 5 feet (1.5m) from ground, of the Bed Frame / Bed Cabinet. Monitor and Inspect these frequently.

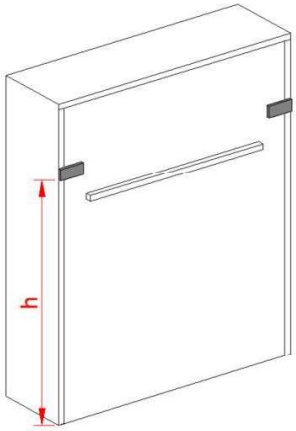

- Whenever NOT in use and after the Murphy Bed has been LIFTED and stowed in its CLOSED POSITION - ALWAYS LATCH UP.

Frequently Asked Questions.
Malfunctioned Pistons.

How do you know when the Murphy Bed's Piston has malfunctioned?
It would be quite evident in that :

a.) the Bed Frame may become LOPSIDED and
b.) the Lift-PULL force to CLOSE may be "heavier" than before.

IMMEDIATELY - STOP USING YOUR MURPHY BED.
SEEK and CONSULT professional maintenance service to ascertain the problem and repair and or have the pistons changed.

OPTION 1

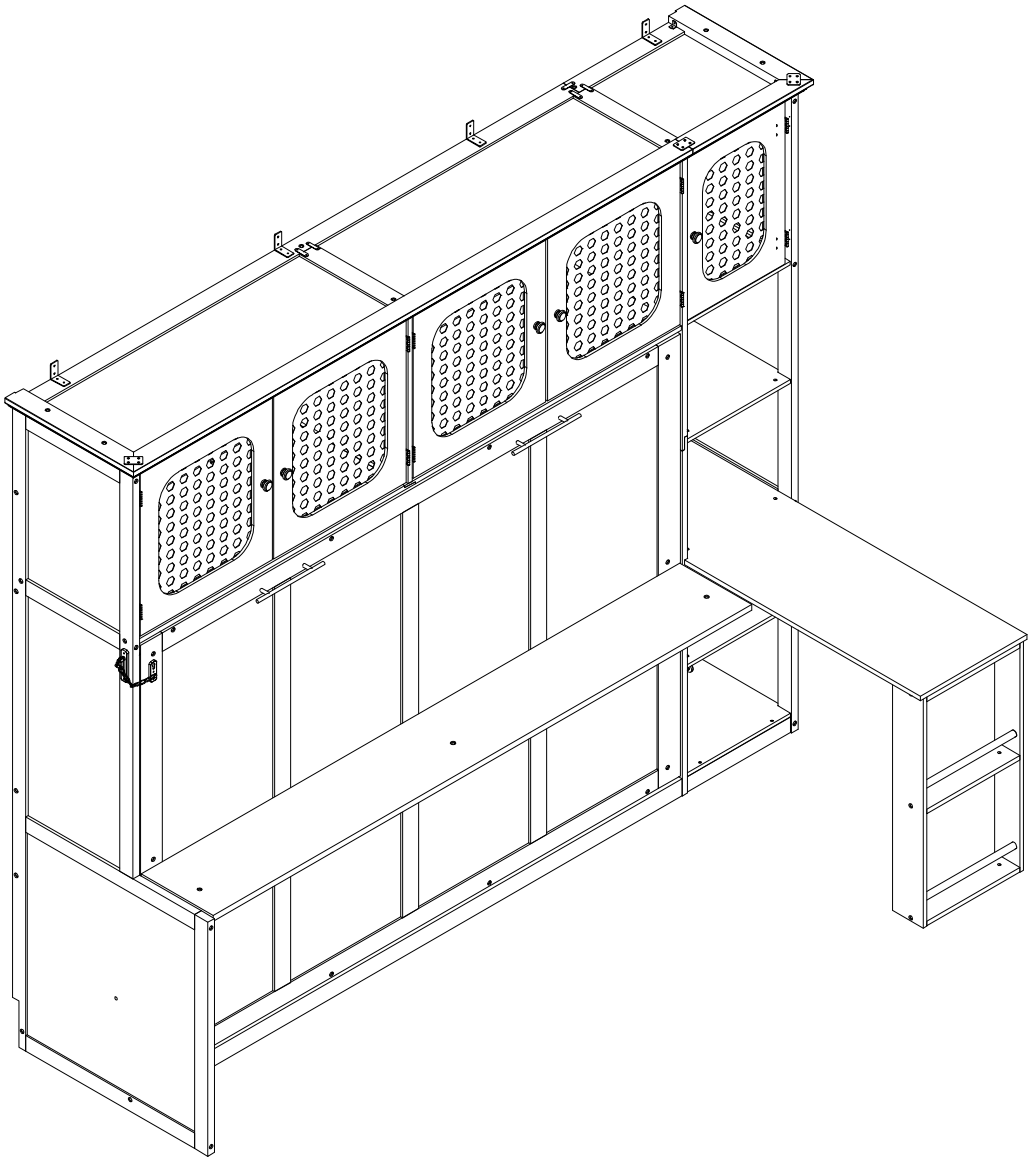

OPTION 2

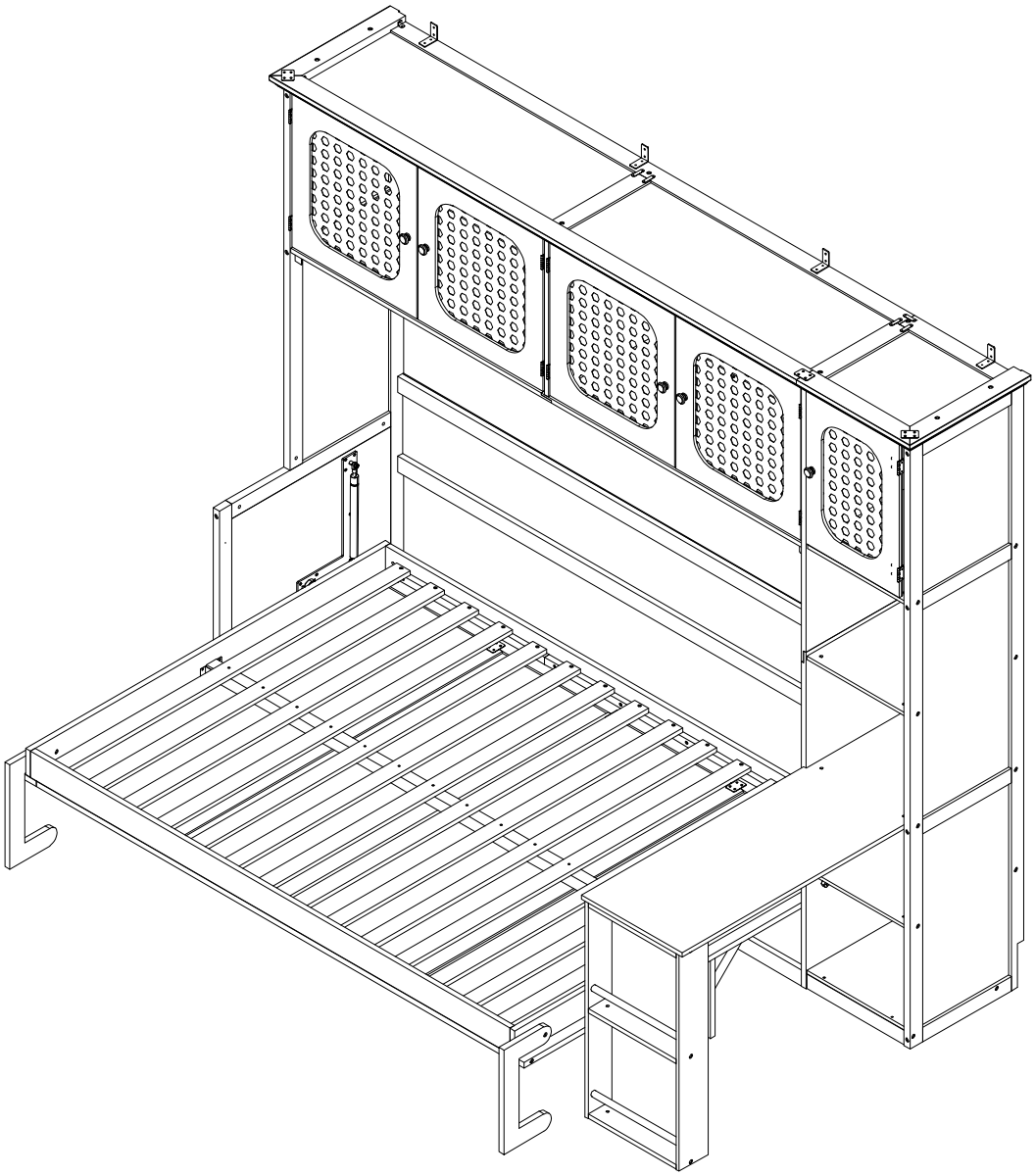

Detail View - Vue détaillée

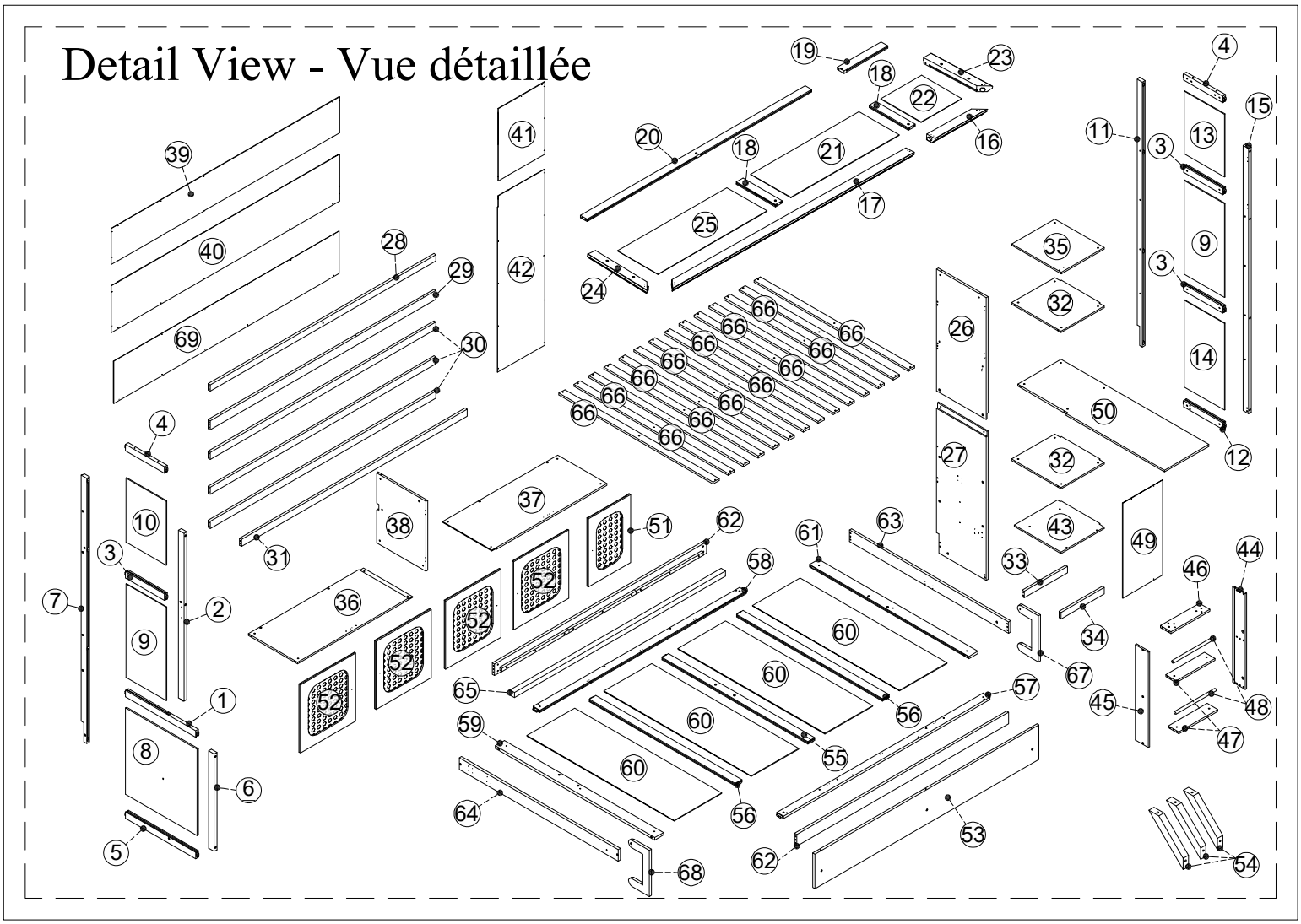

Part List (Box 1)
Liste des pièces

7	11	15
Upright / Montant 01 Pcs/pièces	Upright / Montant 01 Pcs/pièces	Upright / Montant 01 Pcs/pièces
17	20	28
Crossbar / Barre transversale 01 Pcs/pièces	Crossbar / Barre transversale 01 Pcs/pièces	Crossbar / Barre transversale 01 Pcs/pièces
29	30	31
Crossbar / Barre transversale 01 Pcs/pièces	Crossbar / Barre transversale 03 Pcs/pièces	Crossbar / Barre transversale 01 Pcs/pièces
39	40	53
Back panel / Panneau arrière 01 Pcs/pièces	Back panel / Panneau arrière 01 Pcs/pièces	Bed board / Panneau de lit 01 Pcs/pièces
69		
Back panel / Panneau arrière 01 Pcs/pièces		

Part List (Box 2)
Liste des pièces

2 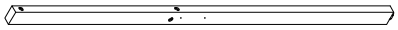	3 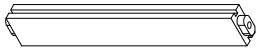	4 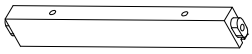
Upright / Montant 01 Pcs/pièces	Crossbar / Barre transversale 03 Pcs/pièces	Crossbar / Barre transversale 02 Pcs/pièces
12 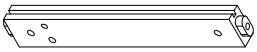	16 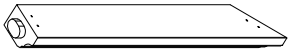	18
Crossbar / Barre transversale 01 Pcs/pièces	Crossbar / Barre transversale 01 Pcs/pièces	Crossbar / Barre transversale 02 Pcs/pièces
23 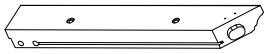	24 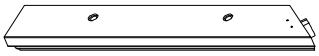	48 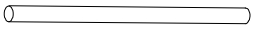
Crossbar / Barre transversale 01 Pcs/pièces	Crossbar / Barre transversale 01 Pcs/pièces	Round bar / Barre ronde 02 Pcs/pièces
55	56	57
Crossbar / Barre transversale 01 Pcs/pièces	Crossbar / Barre transversale 02 Pcs/pièces	Crossbar / Barre transversale 01 Pcs/pièces
58	59 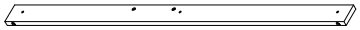	61 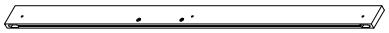
Crossbar / Barre transversale 01 Pcs/pièces	Upright / Montant 01 Pcs/pièces	Upright / Montant 01 Pcs/pièces
62 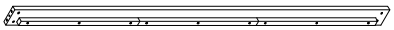	63 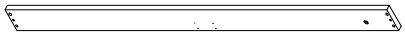	64 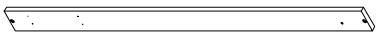
Bed side / Côté de lit 02 Pcs/pièces	Bed side / Côté de lit 01 Pcs/pièces	Bed side / Côté de lit 01 Pcs/pièces
65 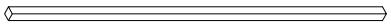	66 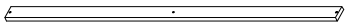	67 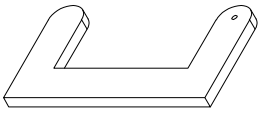
Support bar / Barre de support 01 Pcs/pièces	Slat / Latte 14 Pcs/pièces	Support leg / Pied de support 01 Pcs/pièces
68 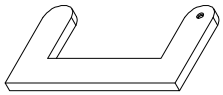		
Support leg / Pied de support 01 Pcs/pièces		

Part List (Box 3)
Liste des pièces

21	25	26
Top panel / Panneau supérieur 01 Pcs/pièces	Top panel / Panneau supérieur 01 Pcs/pièces	Side panel / Panneau latéral 01 Pcs/pièces
27	36	37
Side panel / Panneau latéral 01 Pcs/pièces	Bed board / Panneau de lit 01 Pcs/pièces	Bed board / Panneau de lit 01 Pcs/pièces
42	50	60
Back panel / Panneau arrière 01 Pcs/pièces	Table top / Plateau de table 01 Pcs/pièces	Front panel / Panneau avant 04 Pcs/pièces

Part List (Box 4)
Liste des pièces

1	5	6
Crossbar / Barre transversale 01 Pcs/pièces	Crossbar / Barre transversale 01 Pcs/pièces	Upright / Montant 01 Pcs/pièces
8	9	10
Side panel / Panneau latéral 01 Pcs/pièces	Side panel / Panneau latéral 02 Pcs/pièces	Side panel / Panneau latéral 01 Pcs/pièces
13	14	19
Side panel / Panneau latéral 01 Pcs/pièces	Side panel / Panneau latéral 01 Pcs/pièces	Crossbar / Barre transversale 01 Pcs/pièces
22	32	33
Top panel / Panneau supérieur 01 Pcs/pièces	Bed board / Panneau de lit 02 Pcs/pièces	Crossbar / Barre transversale 01 Pcs/pièces

34 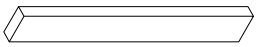	35 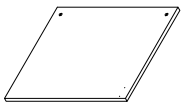	38 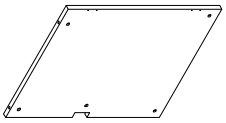
Crossbar / Barre transversale 01 Pcs/pièces	Bed board / Panneau de lit 01 Pcs/pièces	Vertical panel / Panneau vertical 01 Pcs/pièces
41 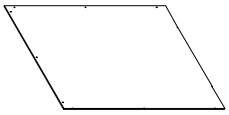	43 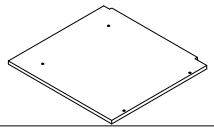	44 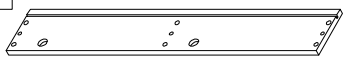
Back panel / Panneau arrière 01 Pcs/pièces	Bed board / Panneau de lit 01 Pcs/pièces	Side panel / Panneau latéral 01 Pcs/pièces
45	46	47 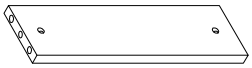
Side panel / Panneau latéral 01 Pcs/pièces	Bed board / Panneau de lit 01 Pcs/pièces	Bed board / Panneau de lit 02 Pcs/pièces
49	51 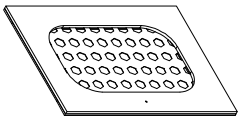	52 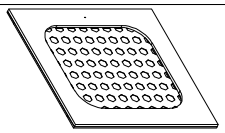
Back panel / Panneau arrière 01 Pcs/pièces	Door frame / Cadre de porte 01 Pcs/pièces	Door frame / Cadre de porte 04 Pcs/pièces
54 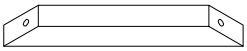	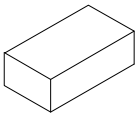	W3 600N - L530mm
Support bar / Barre de support 03 Pcs/pièces	Hardware box/ Boîte de quincaillerie 01 Pcs/pièces	Gas spring / Vérin à gaz 02 Pcs/pièces
W 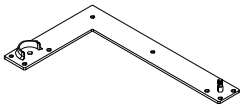	W1 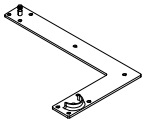	W2 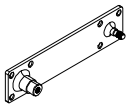
Pass L Right /Passe L Droite 01 Pcs/pièces	Pass L Left /Passe L Gauche 01 Pcs/pièces	02 Pcs/pièces
W5 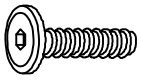	W4 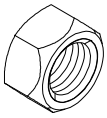	W6
Hex-Head bolt/Boulon à tête hexagonale 02 Pcs/pièces	Nut / Écrou 04 Pcs/pièces	02 Pcs/pièces

Hardware List (Box 4)
Liste du matériel

A Ø1/4"*70mm Hex-Head bolt/Boulon à tête hexagonale 05 Pcs/pièces	B Ø1/4"*9.5*12mm Hex-Head bolt/Boulon à tête hexagonale 82 Pcs/pièces	C K4mm Allen key/Clé Allen 02 Pcs/pièces
D Ø1/4"*90mm Hex-Head bolt/Boulon à tête hexagonale 14 Pcs/pièces	E Ø10*30mm Wood dowel/ Cheville en bois 46 Pcs/pièces	F Ø1/4"*60mm Hex-Head bolt/Boulon à tête hexagonale 53 Pcs/pièces
G #4*30mm Screw/Vis 46 Pcs/pièces	H #3.5*15mm Screw/Vis 79 Pcs/pièces	I 5/32"*25mm Handle bolt/Boulon de poignée 05 Pcs/pièces
J Turned knob/Bouton tourné 05 Pcs/pièces	K Ø6*50mm Screw/Vis 18 Pcs/pièces	L #3.5*15mm Screw/Vis 134Pcs/pièces
M Pass L/Passe L 04 Pcs/pièces	N Pass L/Passe L 08 Pcs/pièces	O Pass Z /Passe Z 03 Pcs/pièces
P Pass U/Passe U 02 Pcs/pièces	Q Pass I /Passe I 15 Pcs/pièces	R Door hinge / Charnière de porte 10 Pcs/pièces
S Ø1/4"*15mm Nut/Noix 08 Pcs/pièces	T Ø1/4"*35mm Hex-Head bolt/Boulon à tête hexagonale 08 Pcs/pièces	U L25mm U1 L250mm Door handle / Poignée de porte 02 set/ensemble
V Wrench / Clé K10 01 Pcs/pièces V1 Wrench / Clé K13 01 Pcs/pièces	X Pass ▯ /Passe ▯ 09 Pcs/pièces	Y Door catch / Loqueteau de porte 10 Pcs/pièces

Hardware List (Box 4)
Liste du matériel

Z Bed board pin / Goupille de panneau 02 Pcs/pièces	F2 Ø1/4"*50mm Hex-Head bolt/Boulon à tête hexagonale 06 Pcs/pièces	E1 Ø10*20mm Wood dowel/ Cheville en bois 02 Pcs/pièces
D1 Ø1/4"*20mm Hex-Head bolt/Boulon à tête hexagonale 04 Pcs/pièces	A1 Ø1/4"*110mm Hex-Head bolt/Boulon à tête hexagonale 04 Pcs/pièces	Y1 Y2 Door lock / Serrure de porte 1 set/ensemble
L1 #3.5*12mm Screw/Vis 52 Pcs/pièces	G1 #4*25mm Screw/Vis 04 Pcs/pièces	N1 Pass L/Passe L 02 Pcs/pièces
S1 S2 S3 S4 14 set/ensemble		L2 #5*70mm Screw/Vis 14 Pcs/pièces
H1 #3.5*20mm Screw/Vis 14 Pcs/pièces	H2 Ø6*W1mm Screw/Vis 28 Pcs/pièces	

ASSEMBLY TOOLS REQUIRED (NOT INCLUDED)

PLEASE BE CAREFUL DO NOT DAMAGE THE HOLE POSITION WHEN YOU USE POWER TOOLS !

ATTENTION À NE PAS ENDOMMAGER LA POSITION DU TROU LORSQUE VOUS UTILISEZ DES OUTILS ÉLECTRIQUES !

Step/Étape 01

A	B	C
1 Pcs/pièces	1 Pcs/pièces	1 Pc/pièce

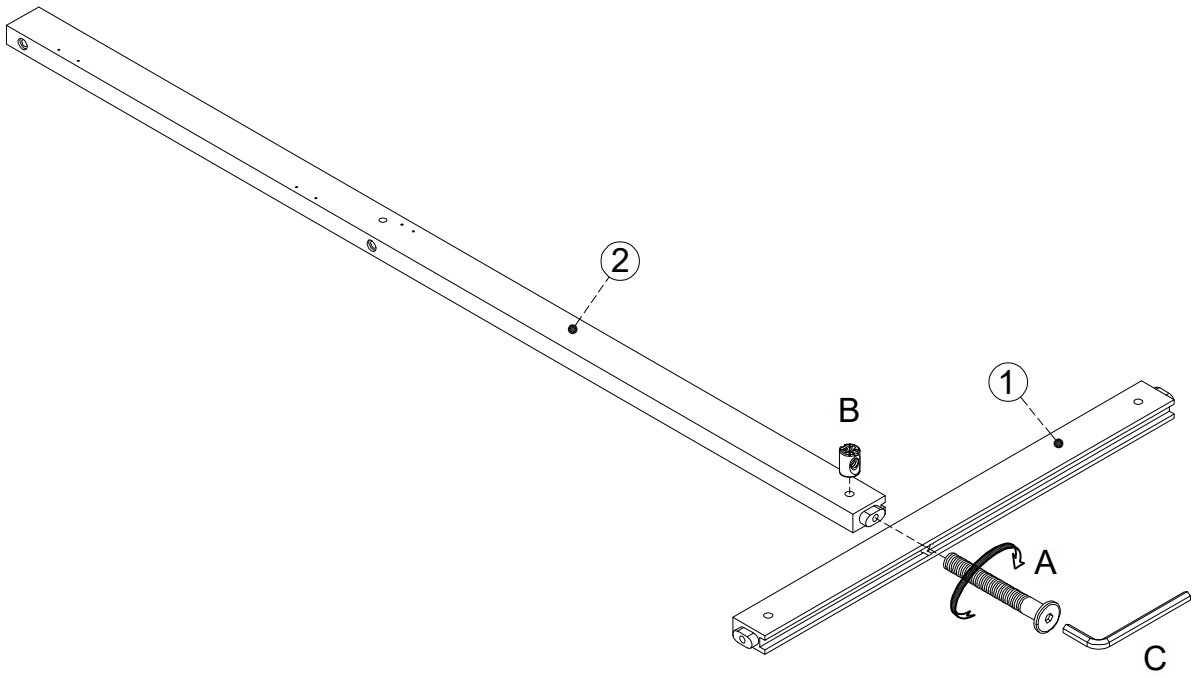

Step/Étape 02

B	C	D
4 Pcs/pièces	1 Pc/pièce	4 Pcs/pièces

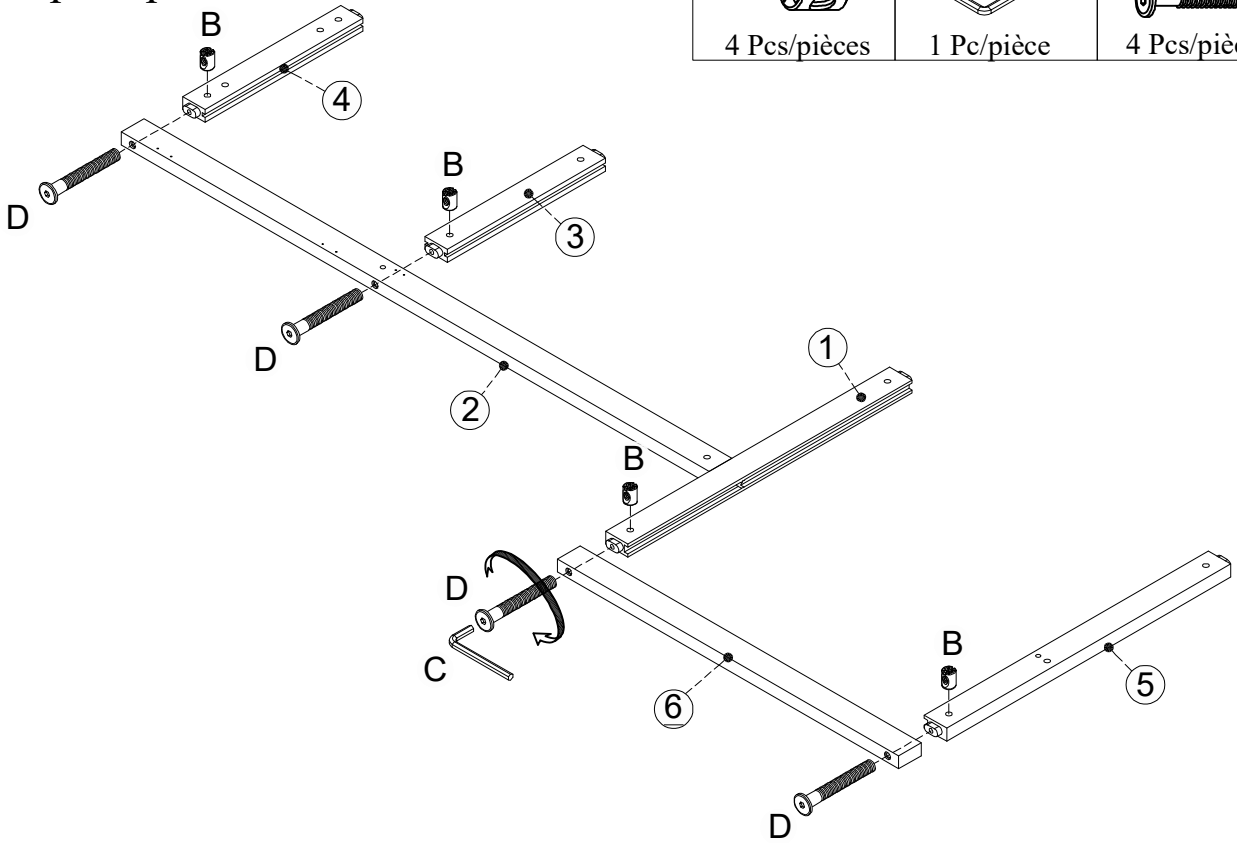

Step/Étape 03

B	C	D	F
4 Pcs/pièces	1 Pc/pièce	3 Pcs/pièces	1 Pcs/pièces

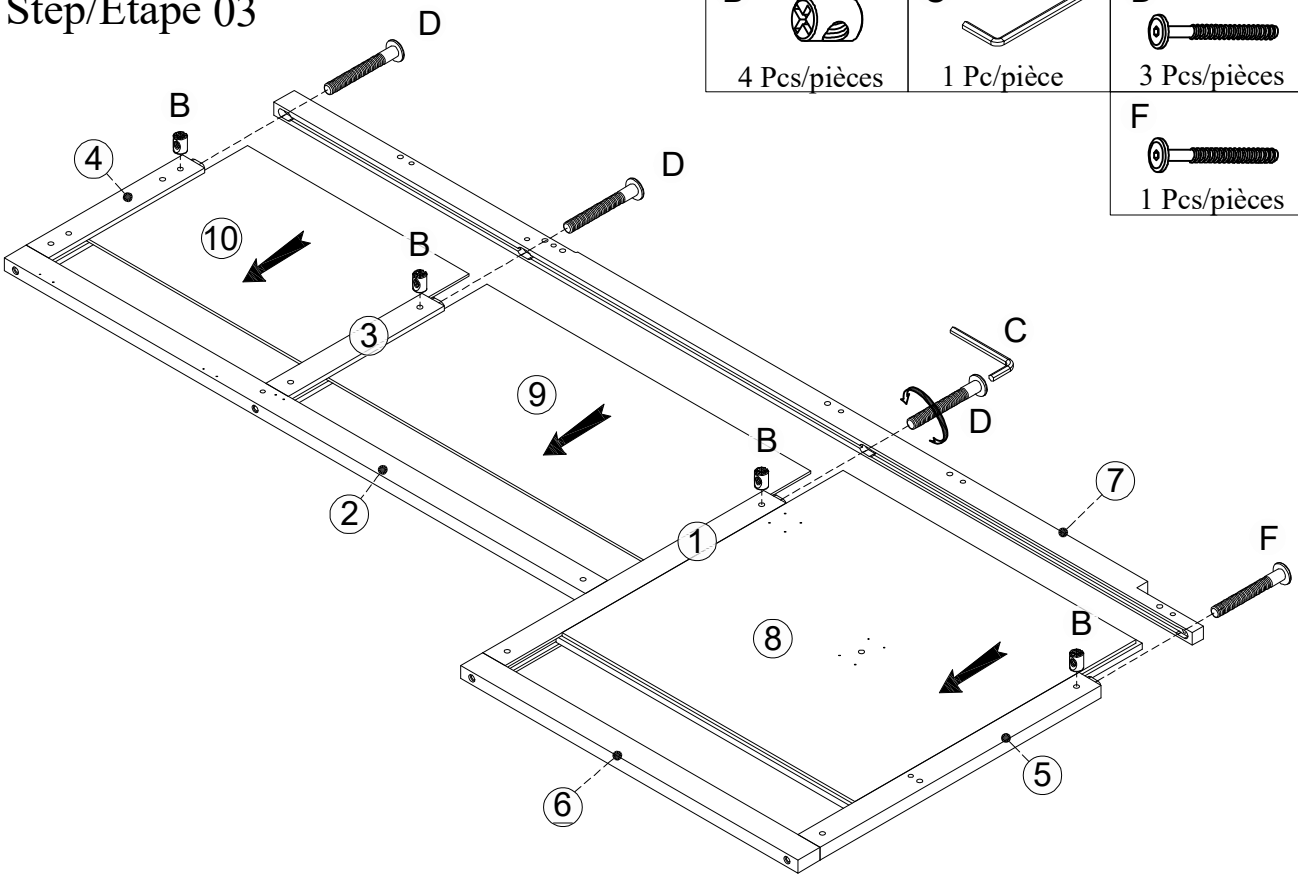

Step/Étape 04

W1	L
1 Pc/pièce	10 Pcs/pièces

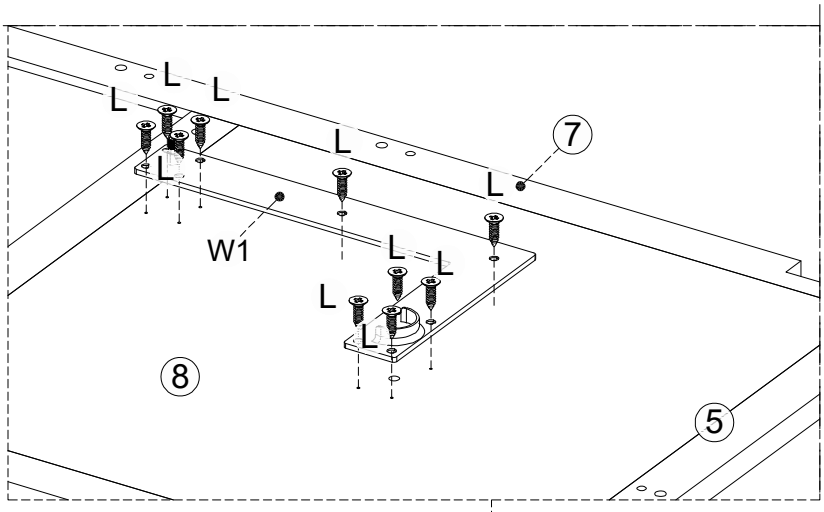

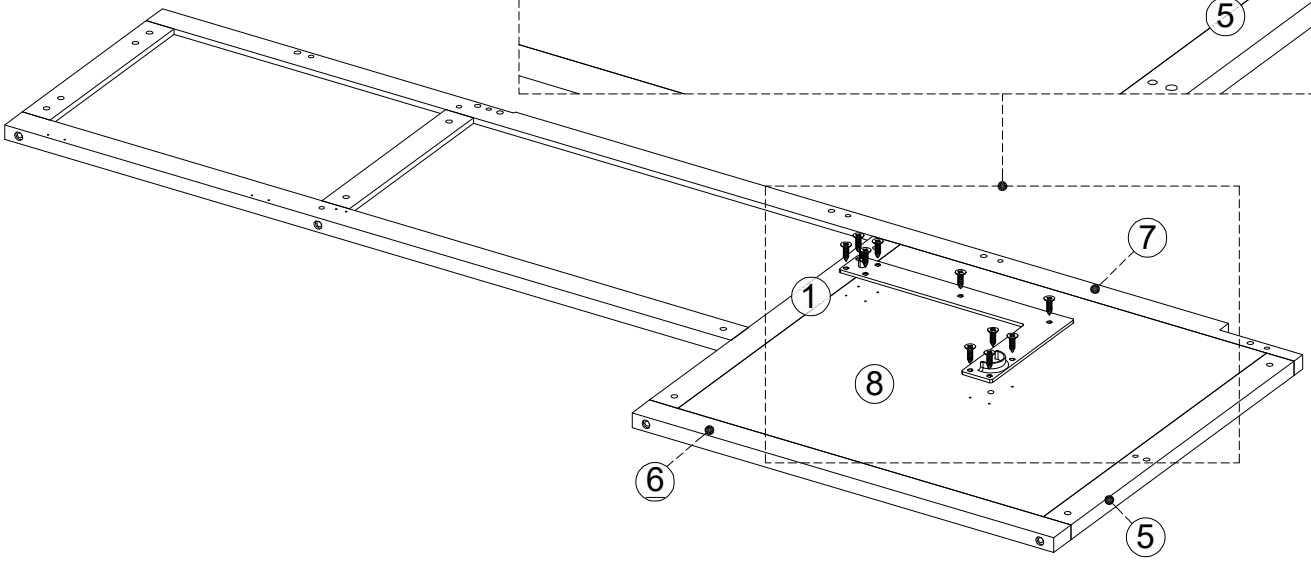

Step/Étape 05

F	B	C	D
1 Pcs/pièces	4 Pcs/pièces	1 Pc/pièce	3 Pcs/pièces

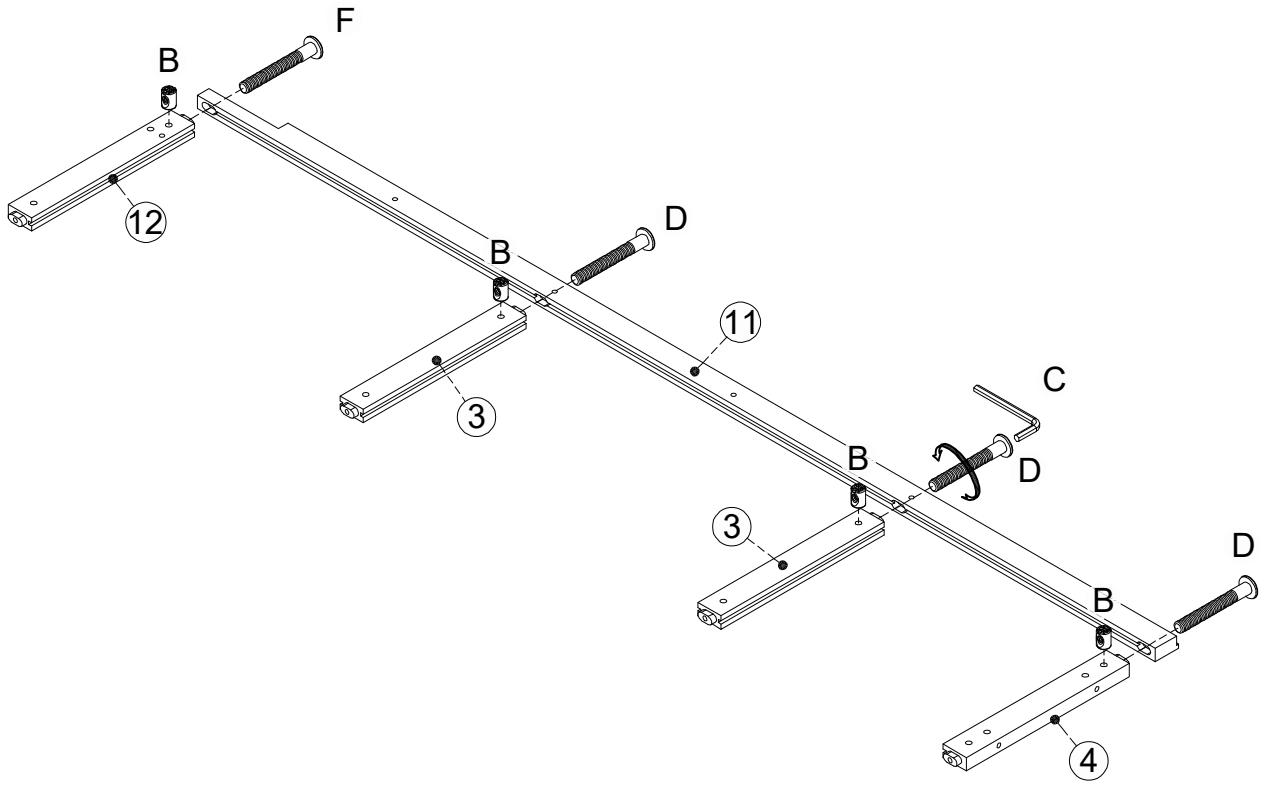

Step/Étape 06

B	C	D
4 Pcs/pièces	1 Pc/pièce	4 Pcs/pièces

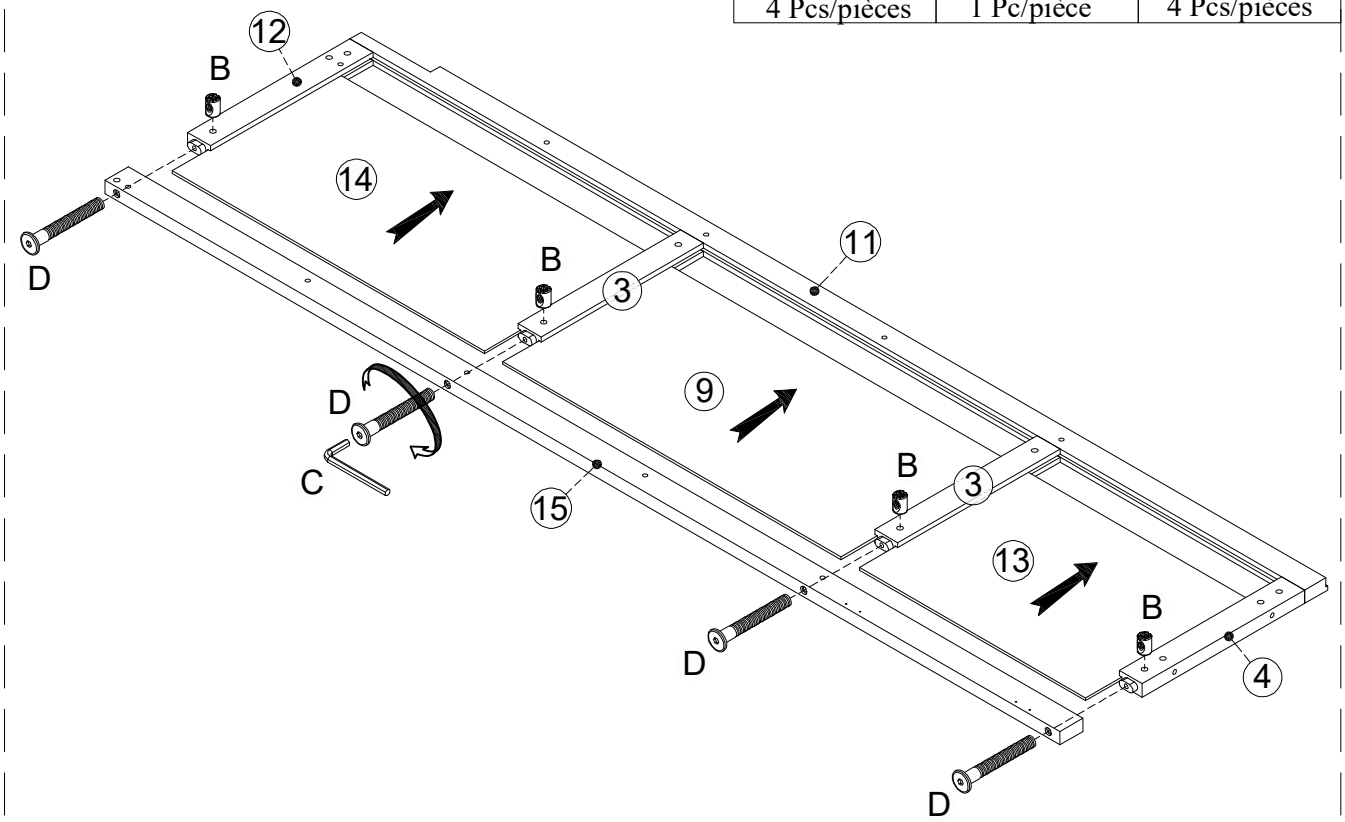

Step/Étape 07

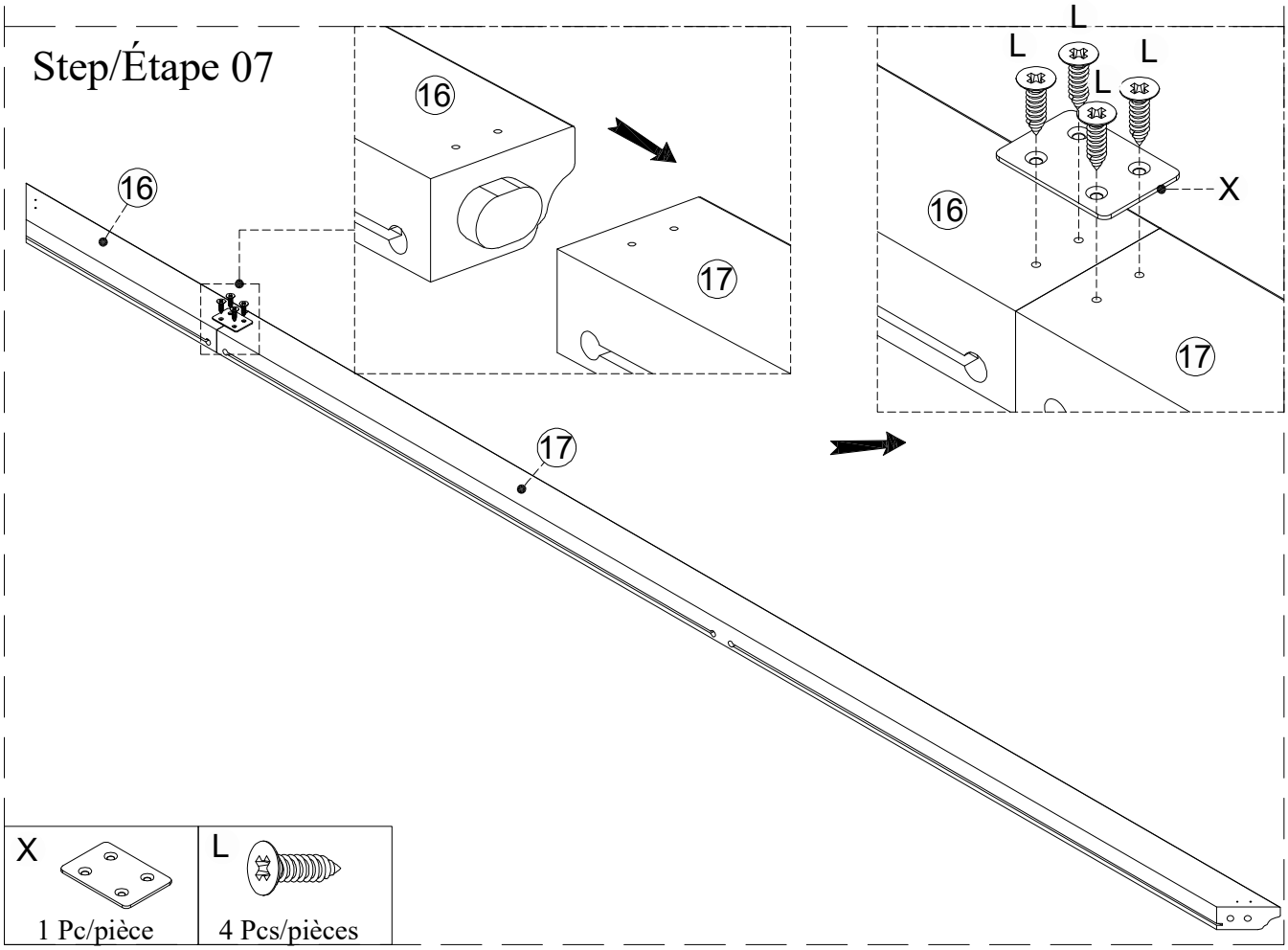

X	L
1 Pc/pièce	4 Pcs/pièces

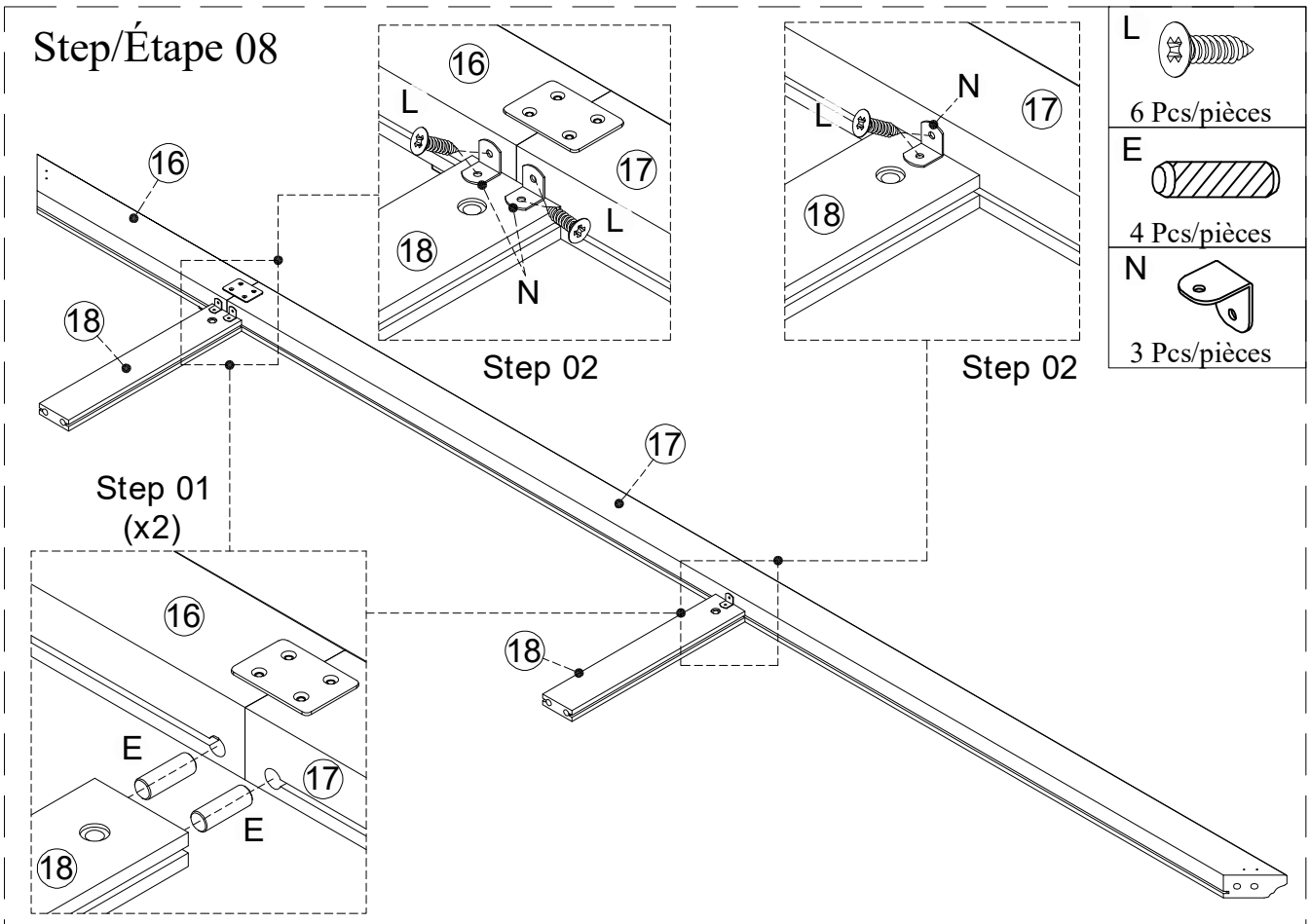
Step/Étape 08
16
17
18
L
N
Step 02
Step 02
Step 01
(x2)
E
L
6 Pcs/pièces
E
4 Pcs/pièces
N
3 Pcs/pièces

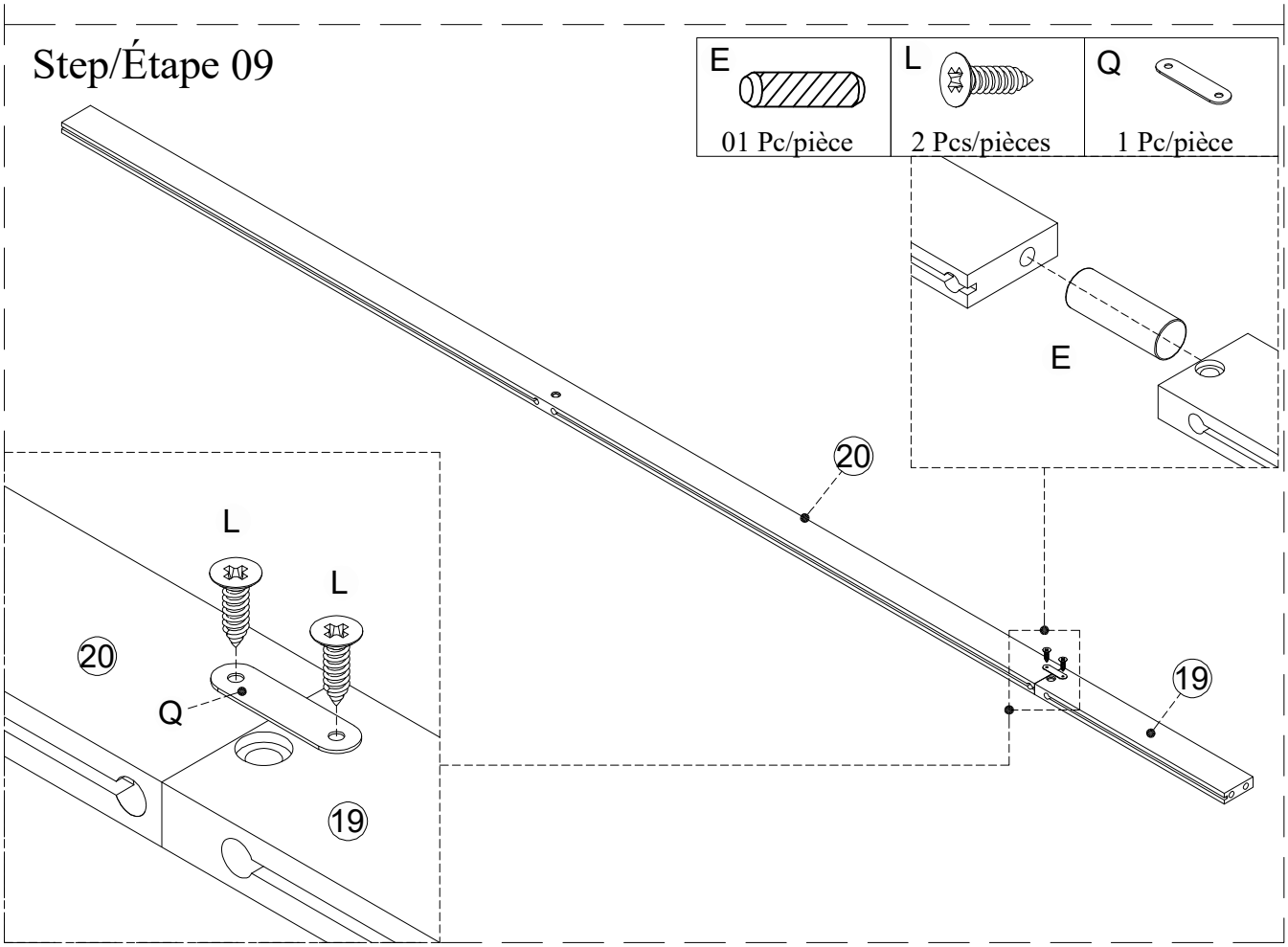
Step/Étape 09
E
01 Pc/pièce
L
2 Pcs/pièces
Q
1 Pc/pièce
E
20
19
L
L
Q

Step/Étape 10

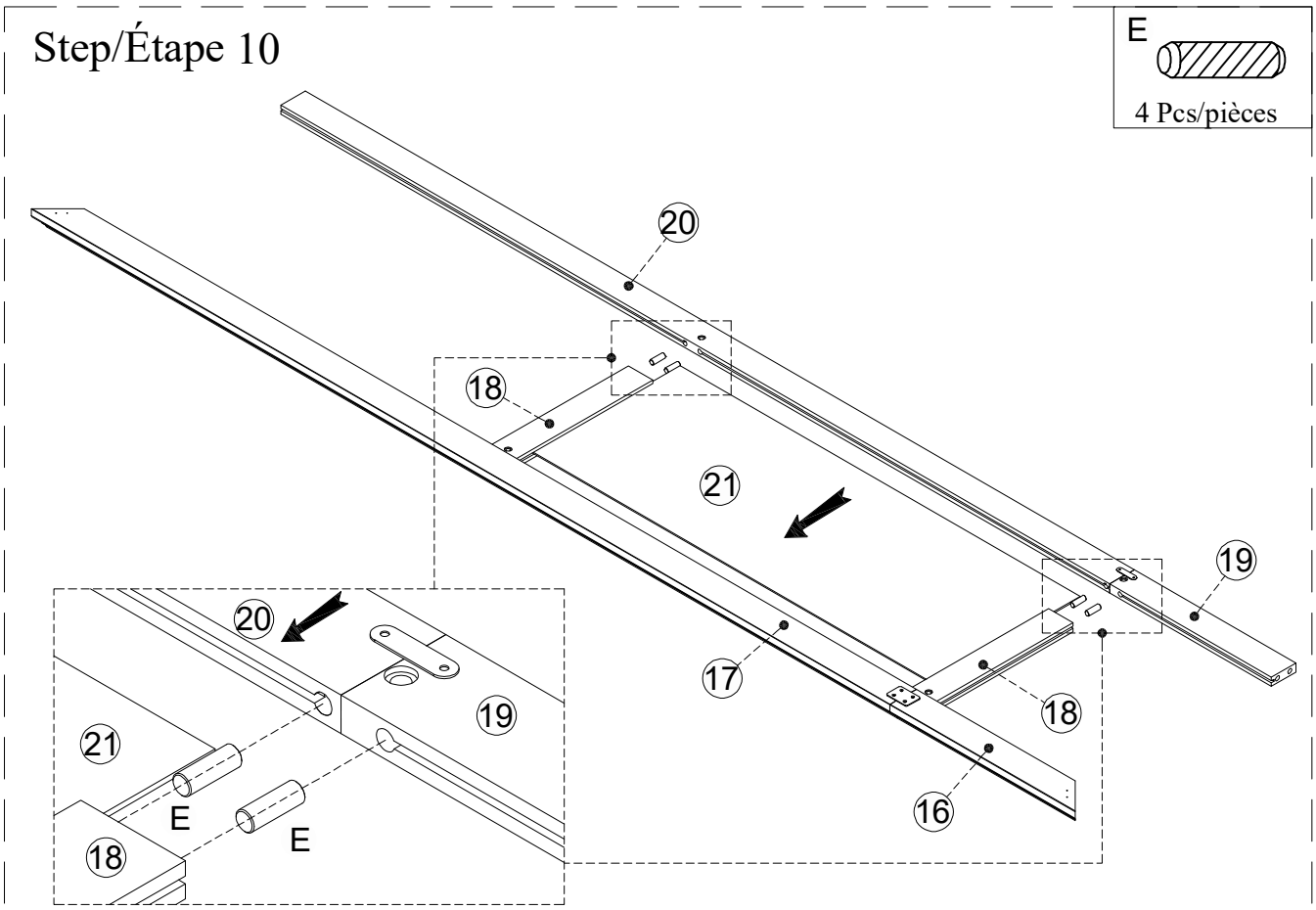

Step/Étape 11

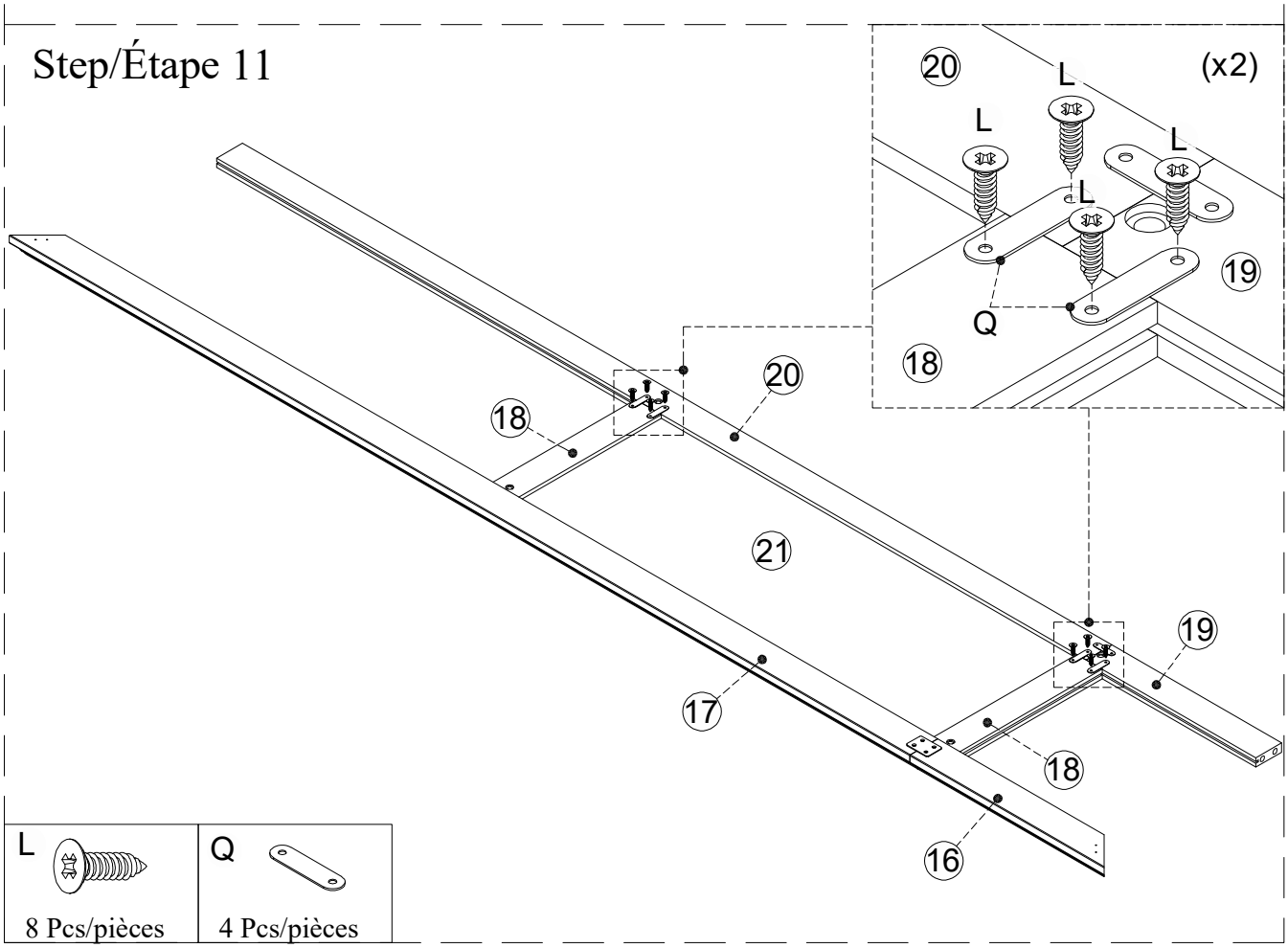

Step/Étape 12

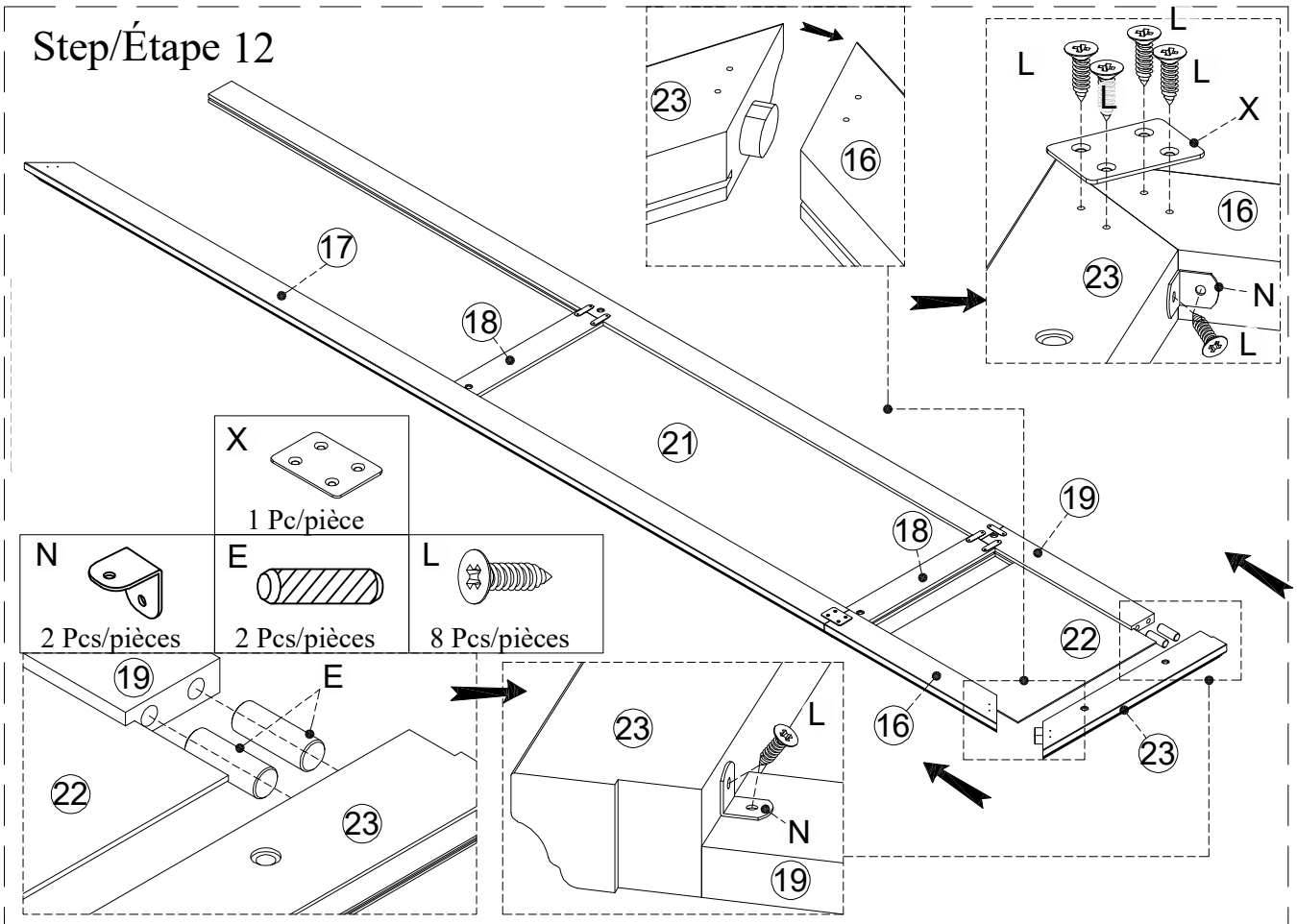

Step/Étape 13

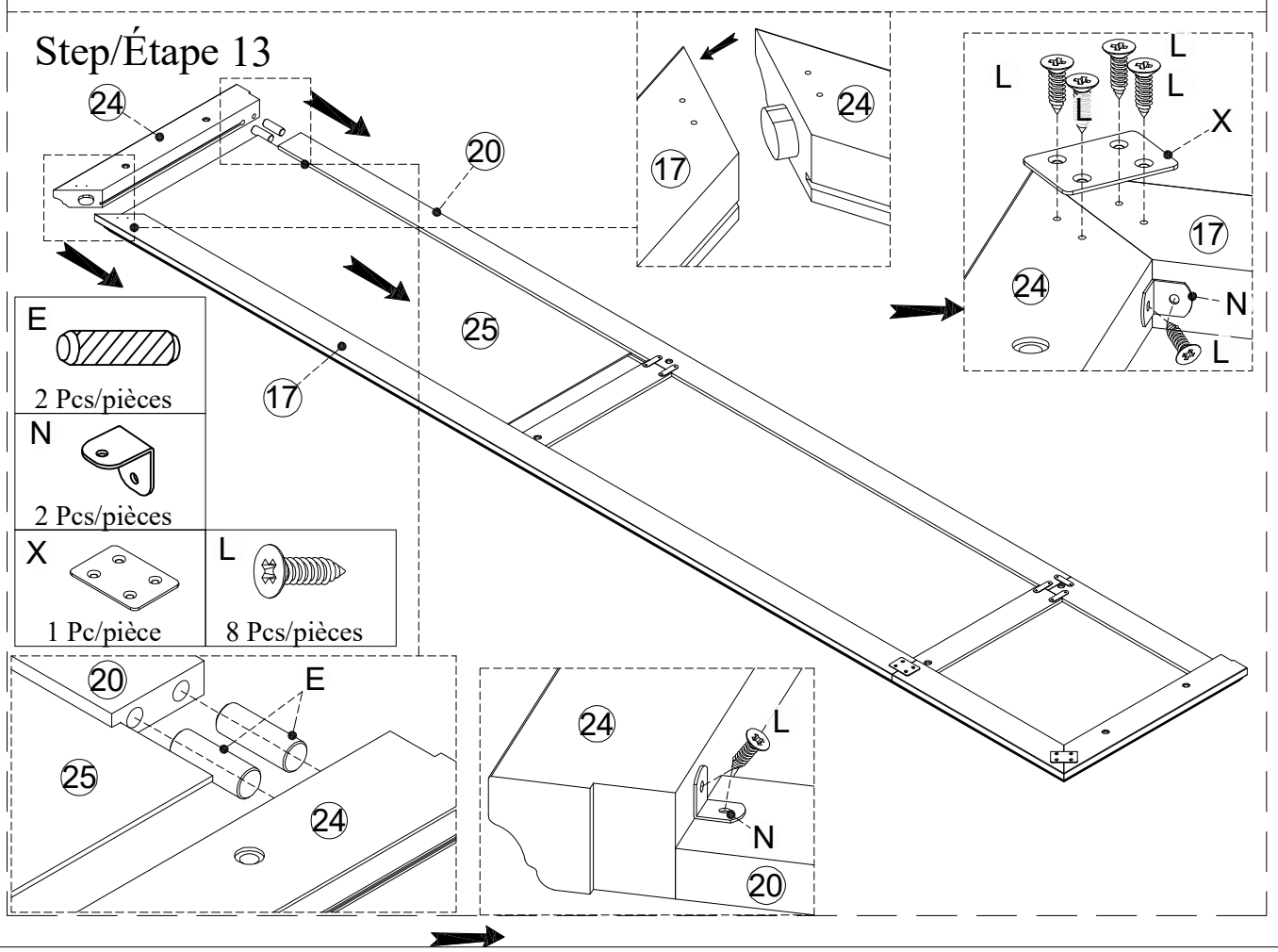

Step/Étape 14

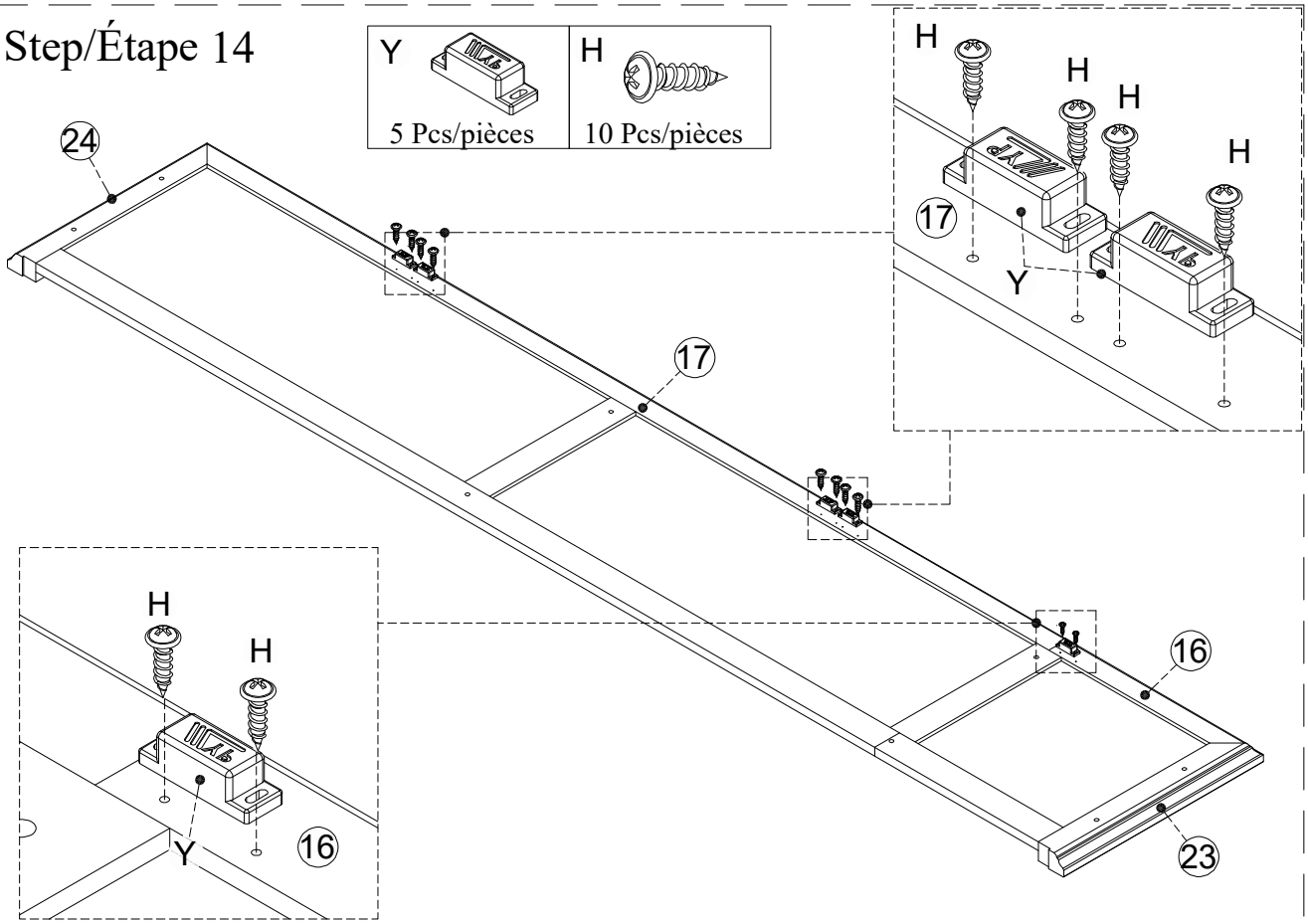

Step/Étape 15

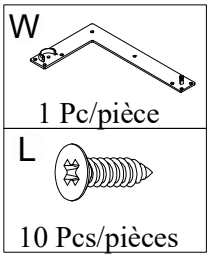

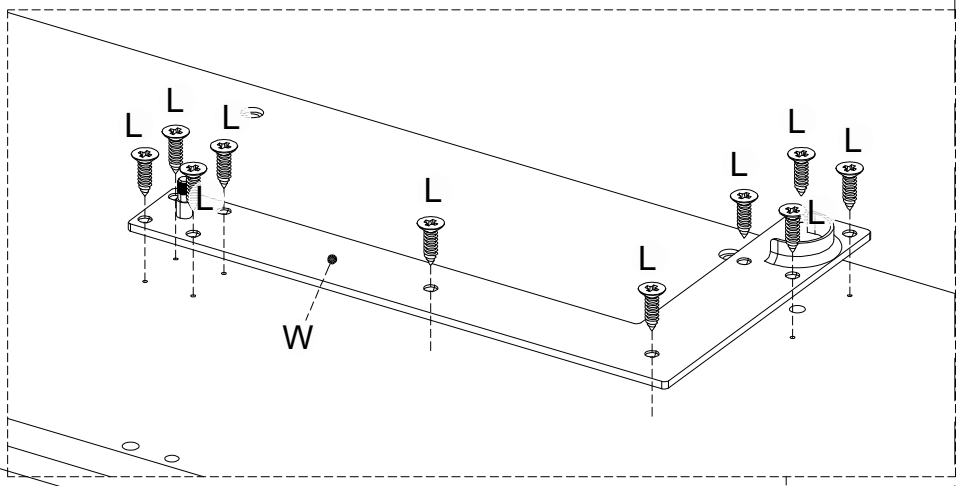

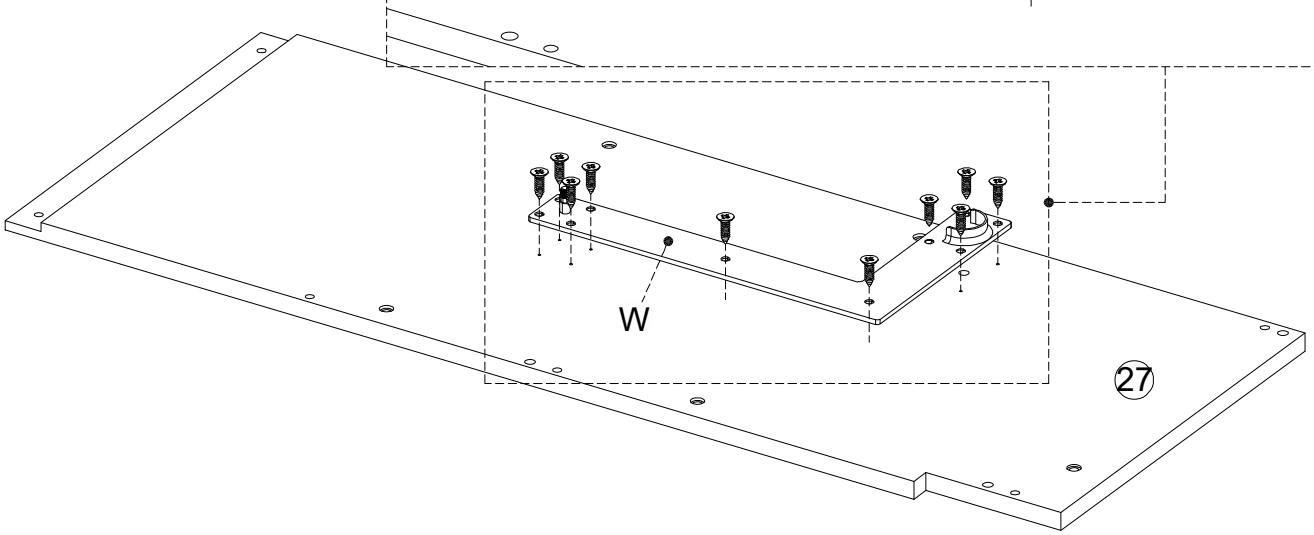

Step/Étape 16

C 1 Pc/pièce	F 4 Pcs/pièces
B 4 Pcs/pièces	E 6 Pcs/pièces

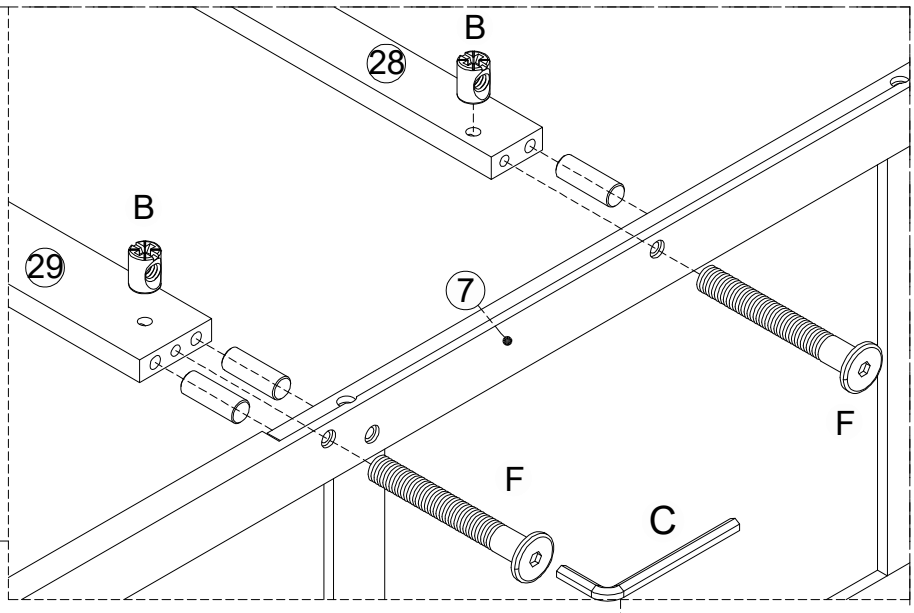

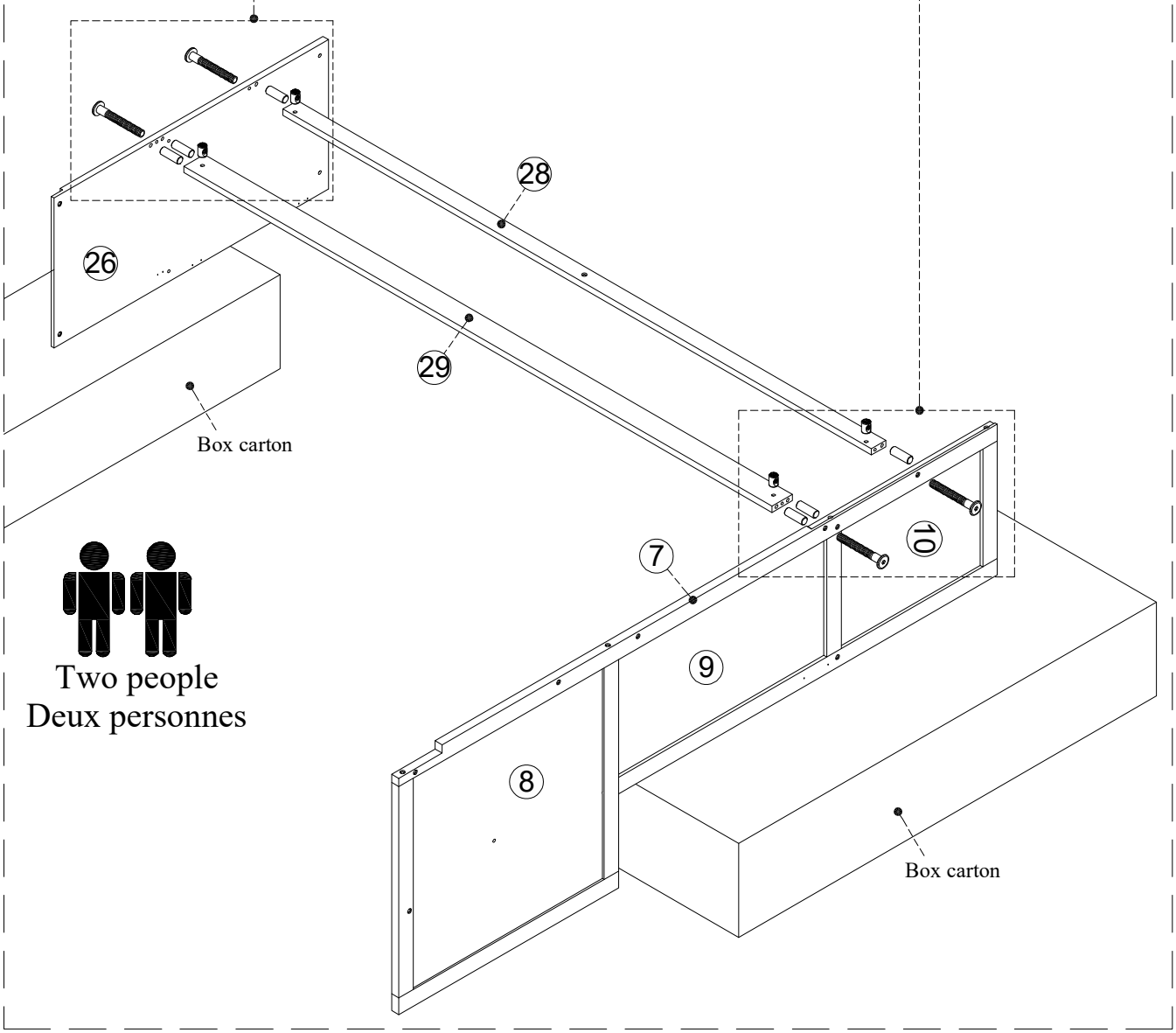

Two people
Deux personnes

Step/Étape 17

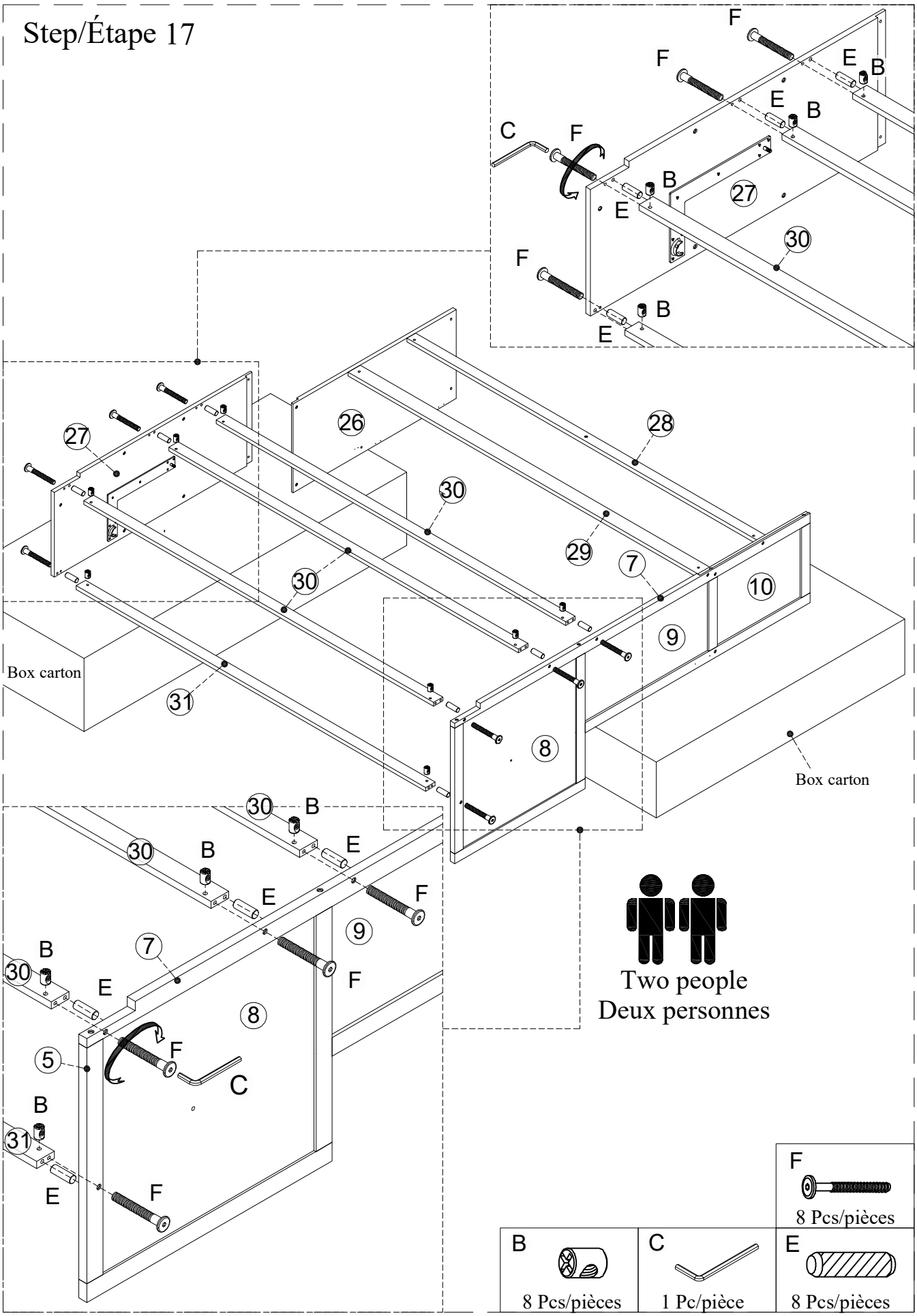

Step/Étape 18

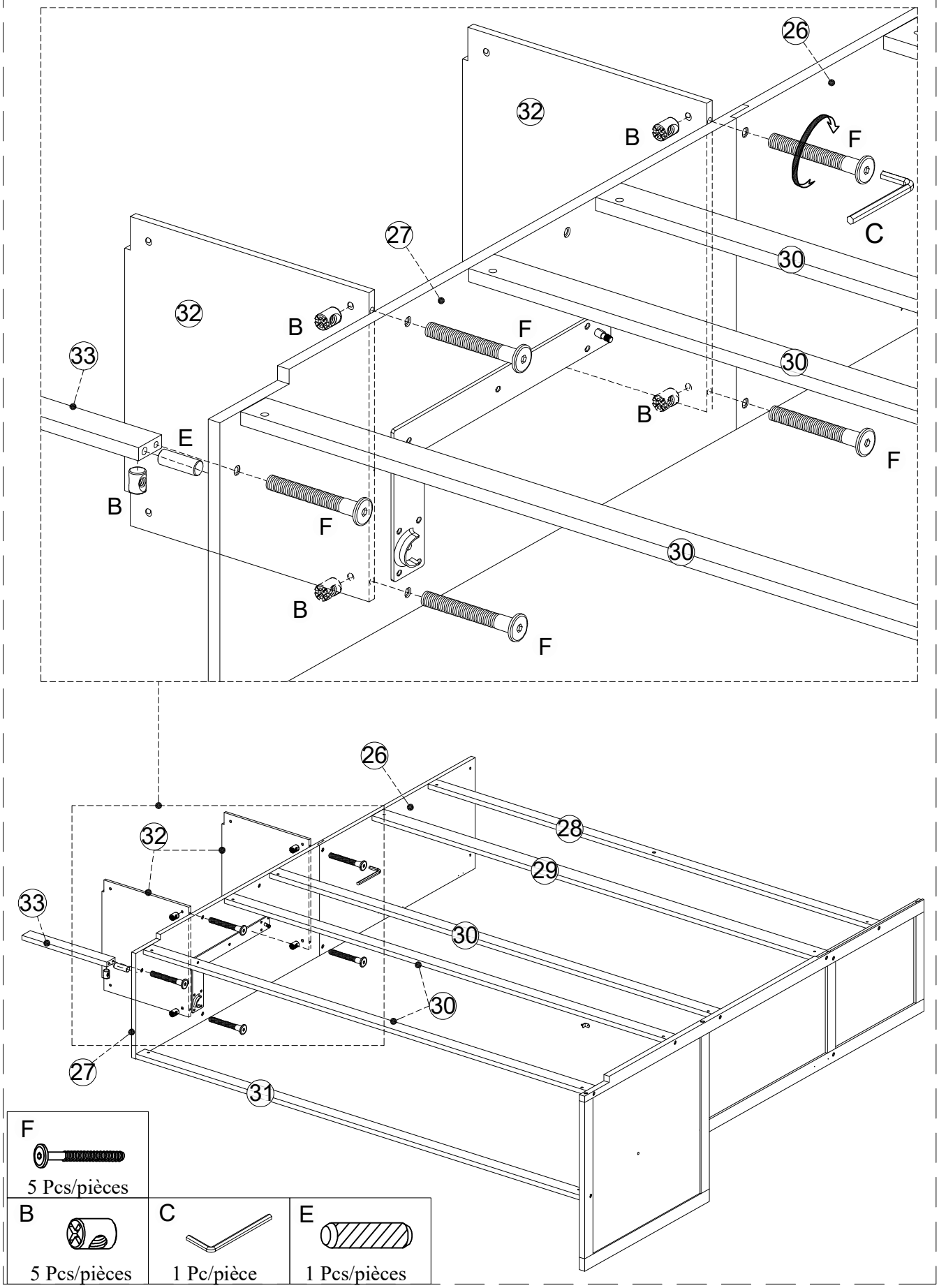

Step/Étape 19

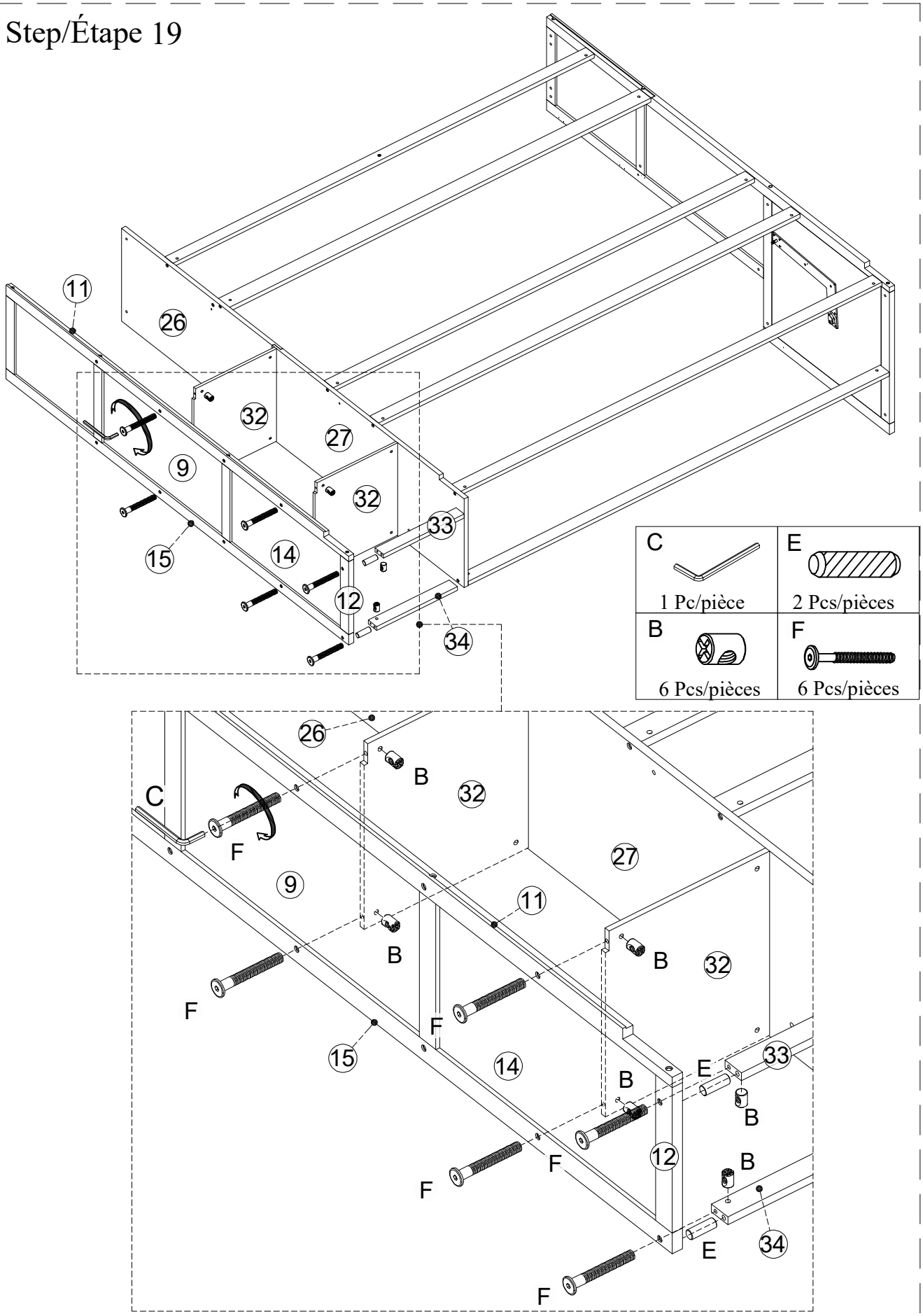

Step/Étape 20

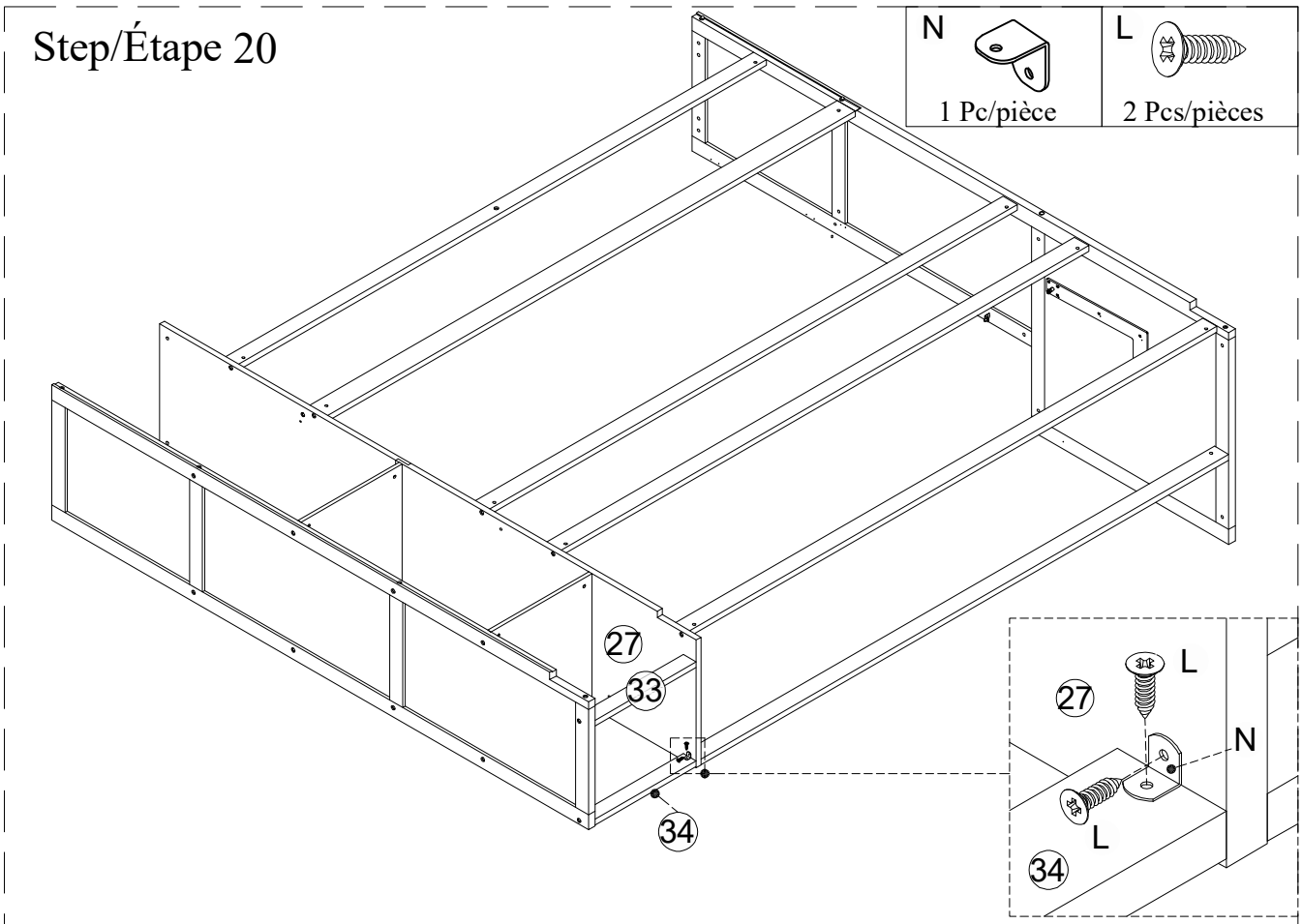

Step/Étape 21

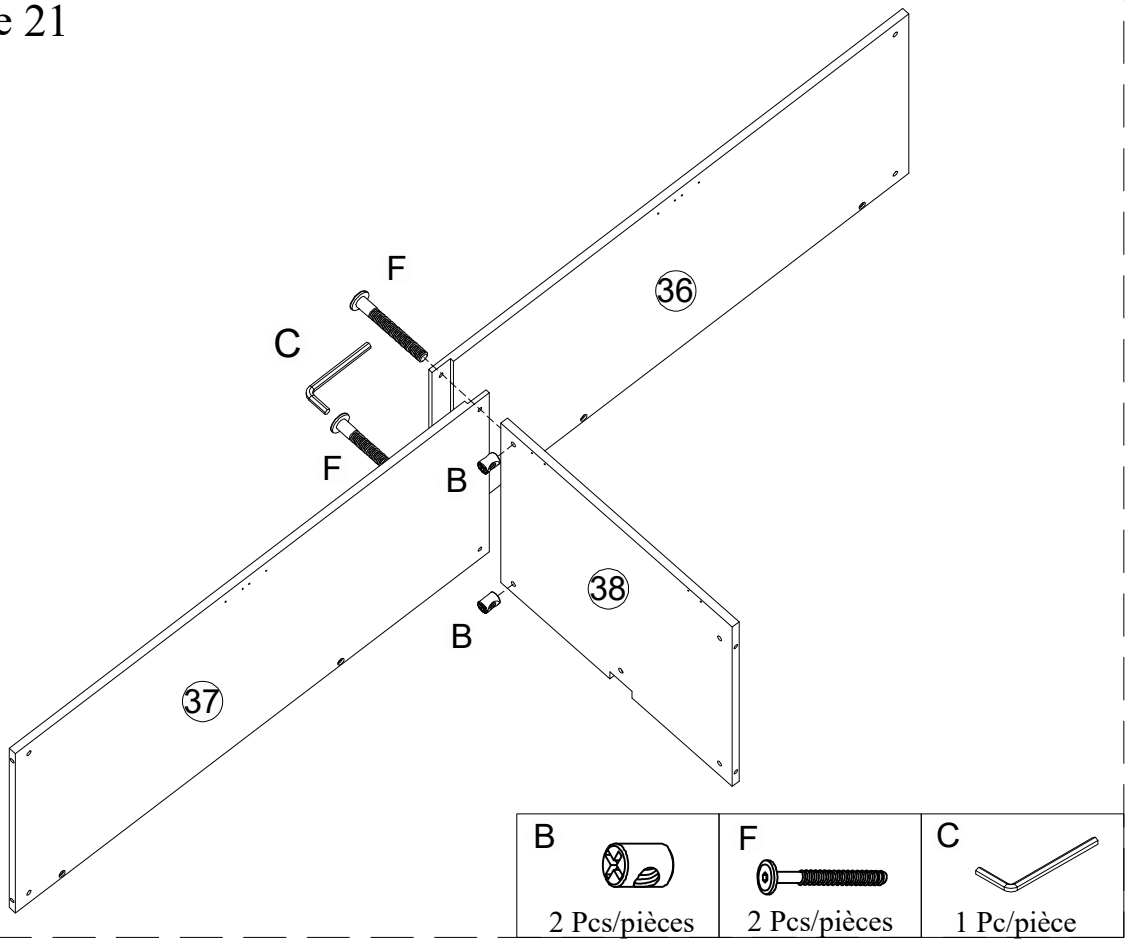

Step/Étape 22

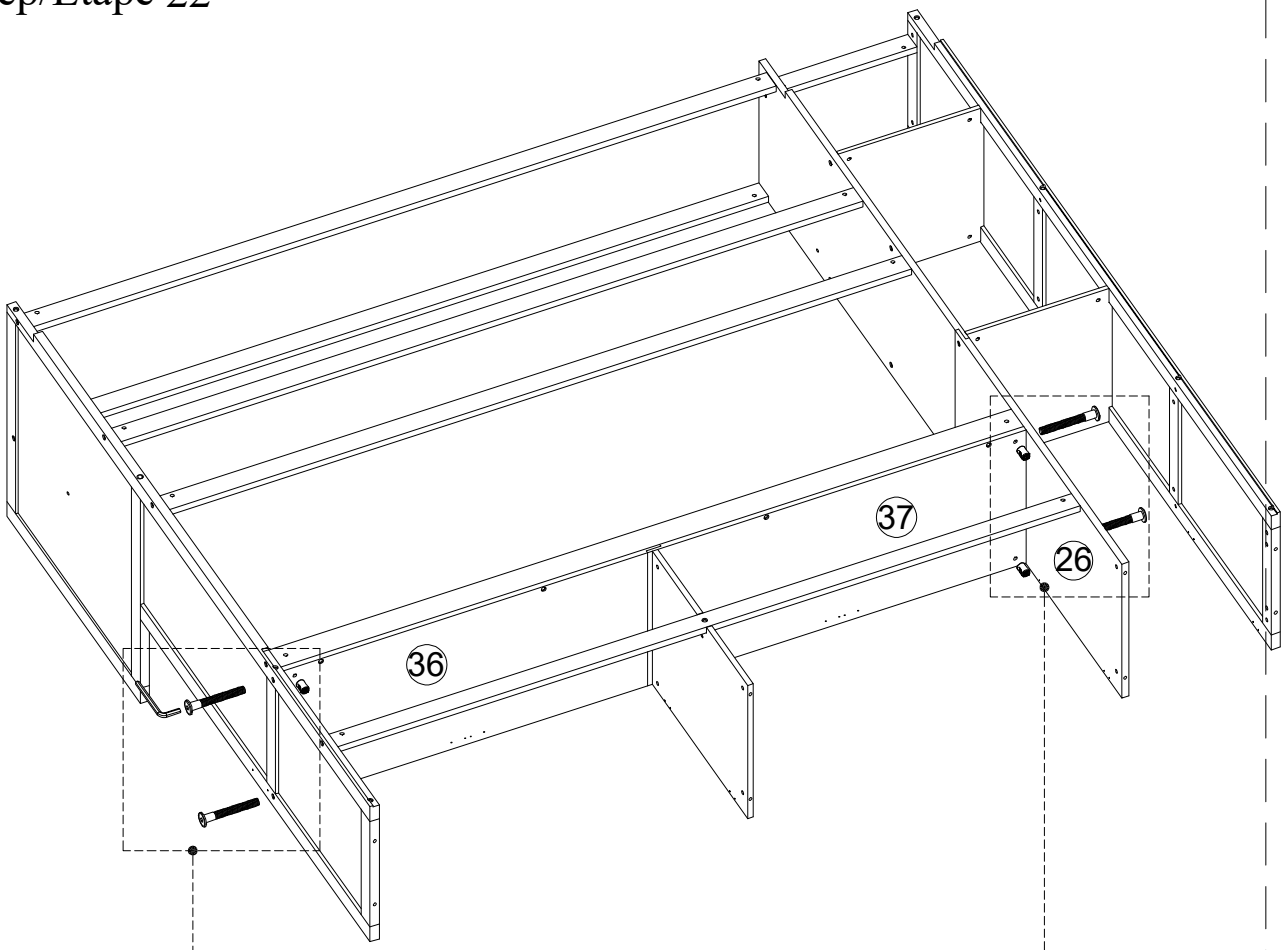

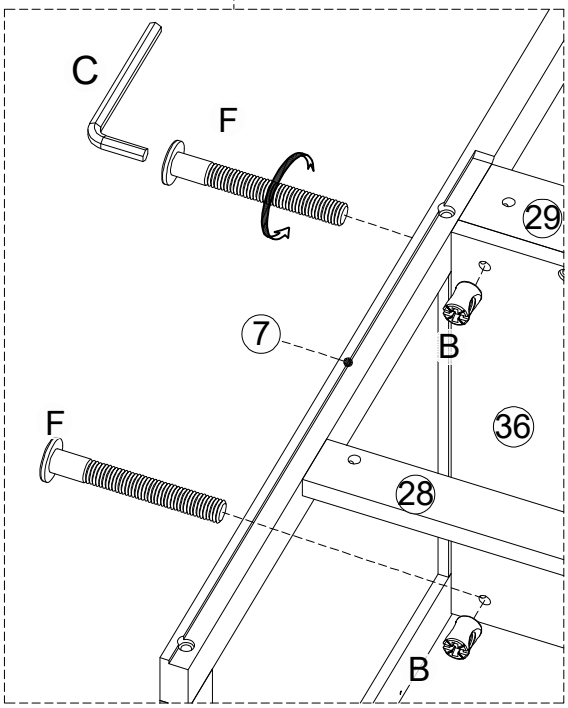

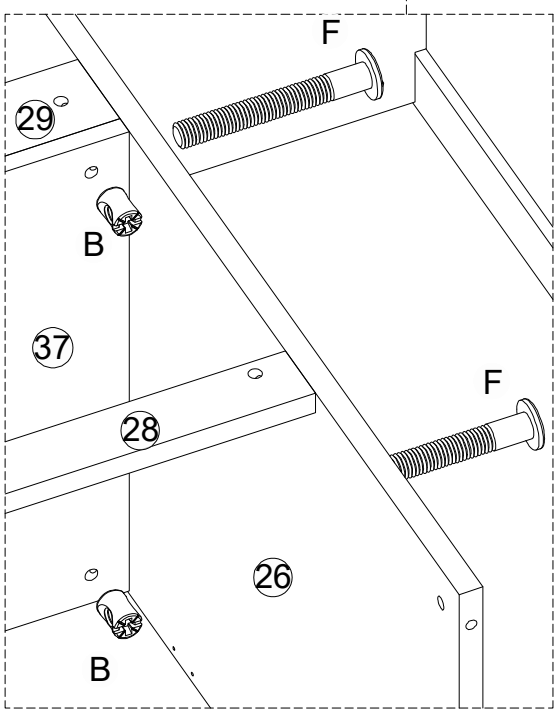

C	B	F
		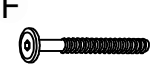
1 Pc/pièce	4 Pcs/pièces	4 Pcs/pièces

Step/Étape 23

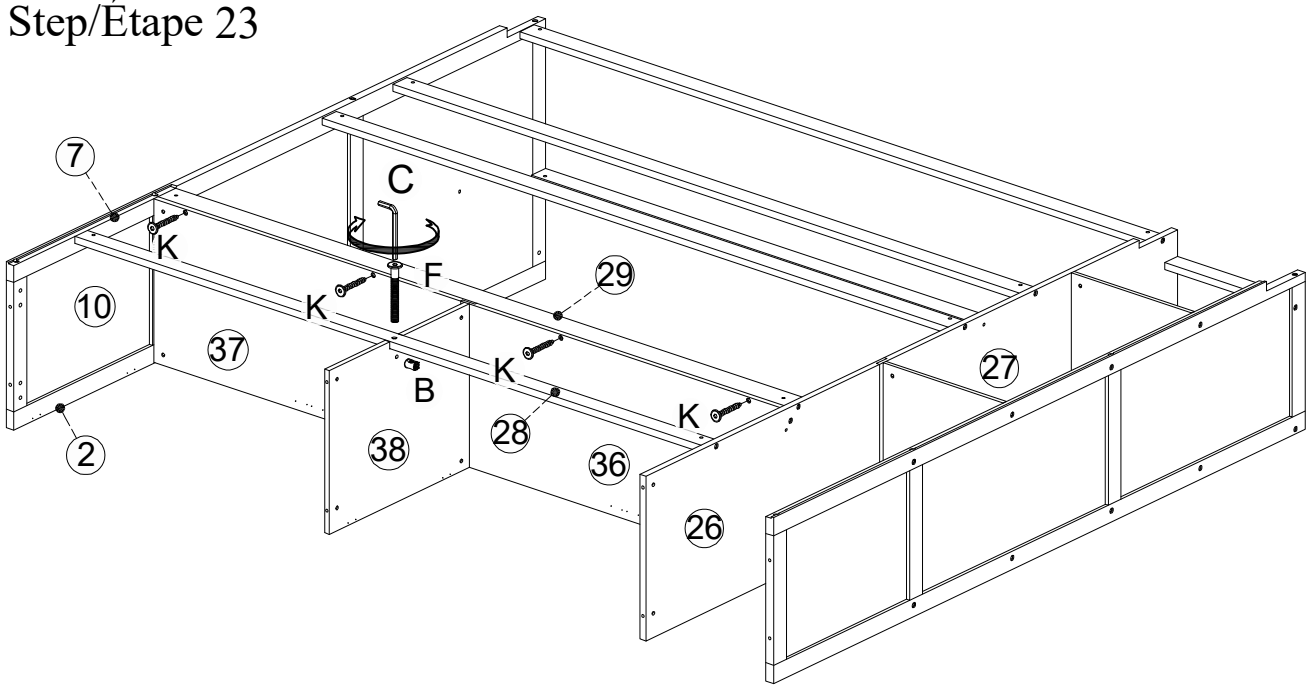

B	F	C	K
1 Pcs/pièces	1 Pcs/pièces	1 Pc/pièce	4 Pcs/pièces

Step/Étape 24

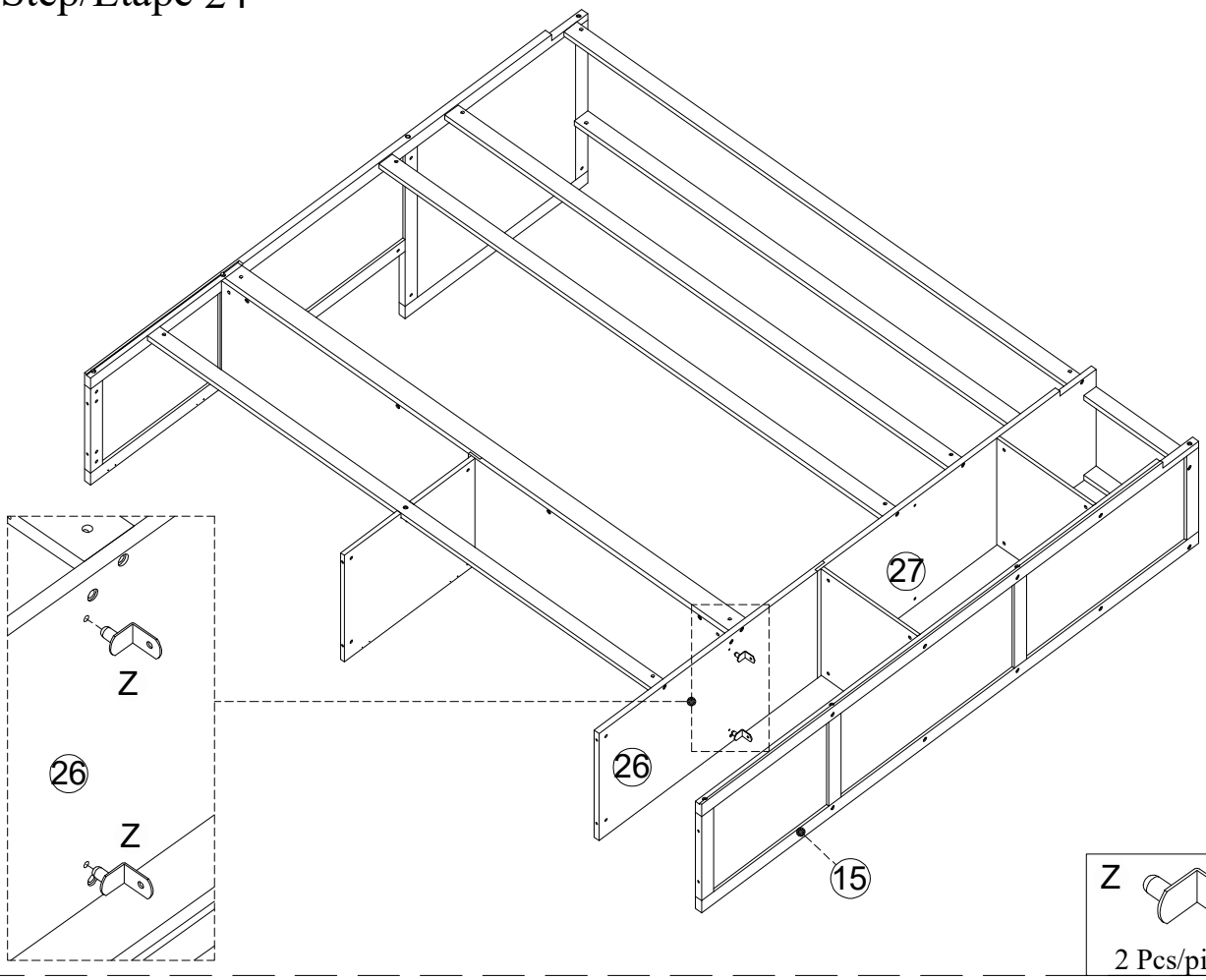

Z
2 Pcs/pièces

Step/Étape 25

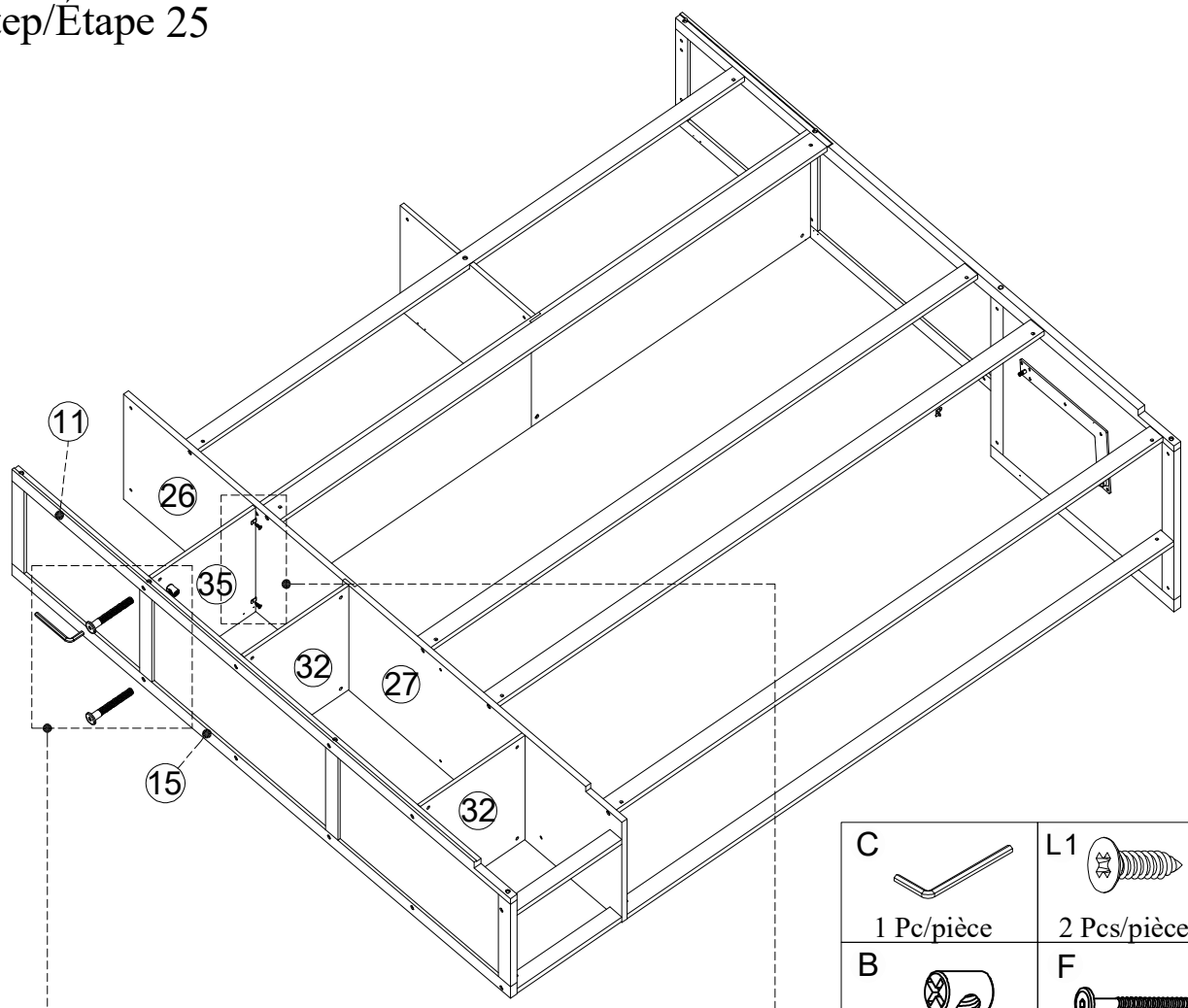

C 1 Pc/pièce	L1 2 Pcs/pièces
B 2 Pcs/pièces	F 2 Pcs/pièces

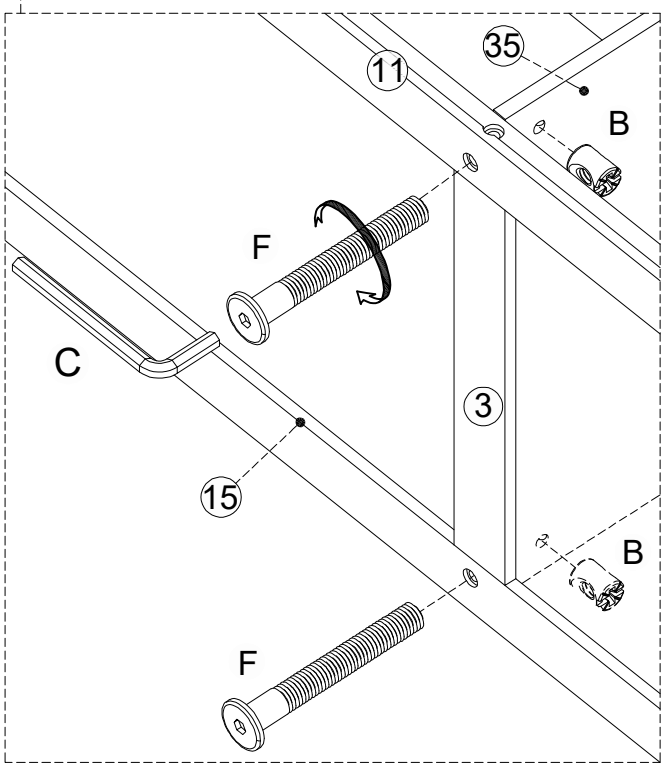

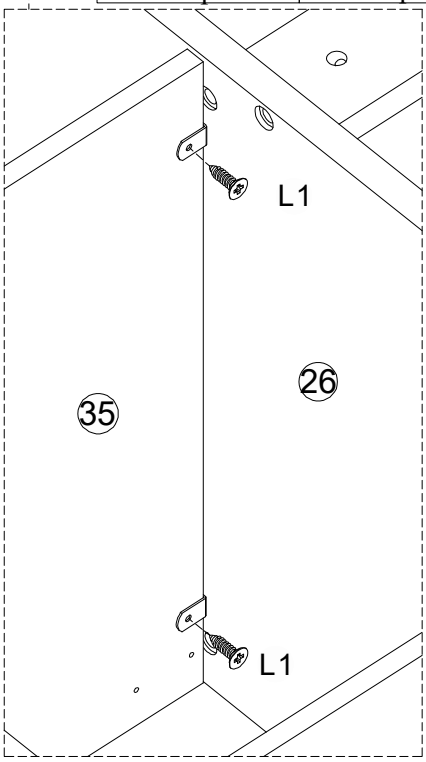

Step/Étape 26

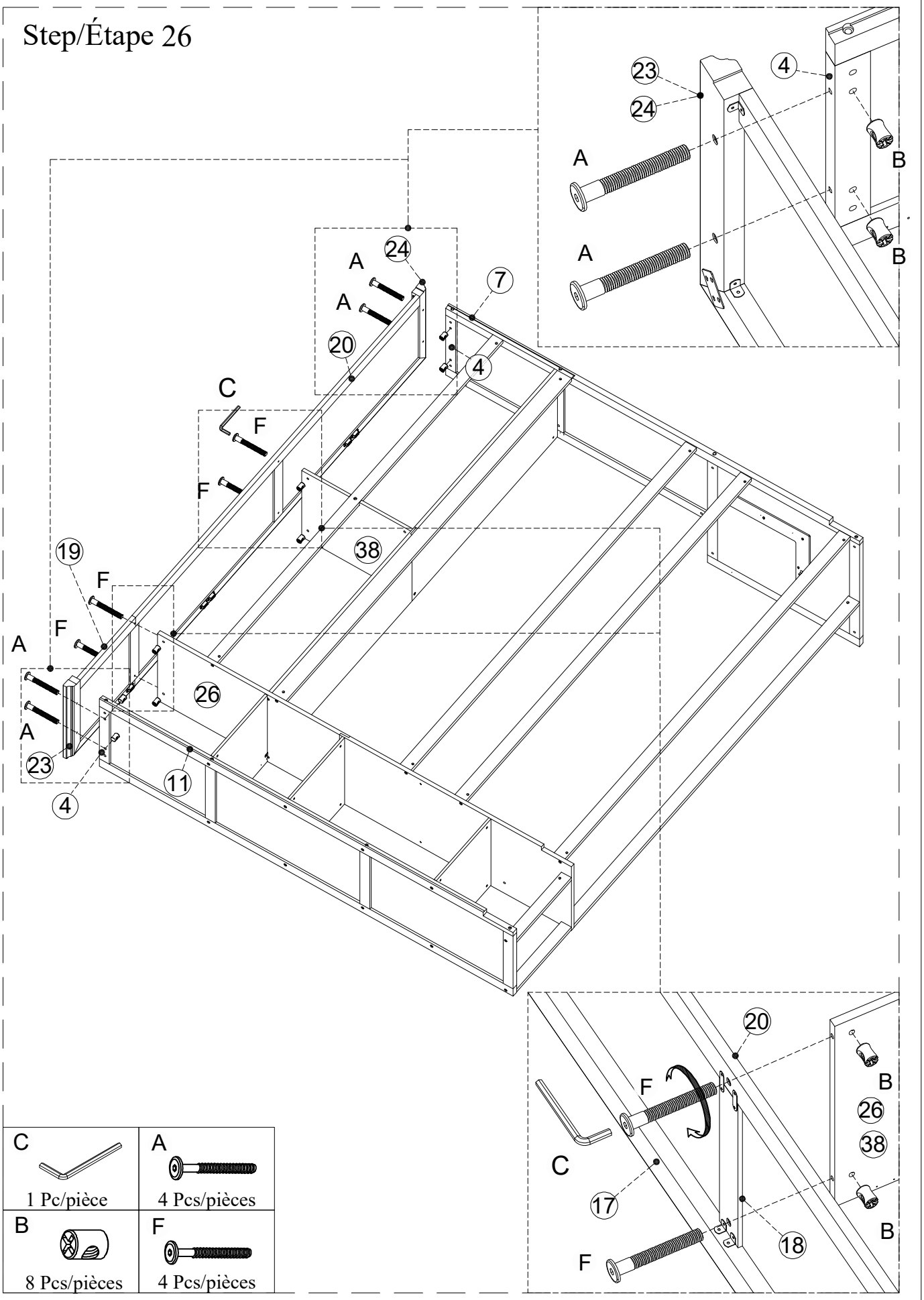

C 1 Pc/pièce	A 4 Pcs/pièces
B 8 Pcs/pièces	F 4 Pcs/pièces

Step/Étape 27

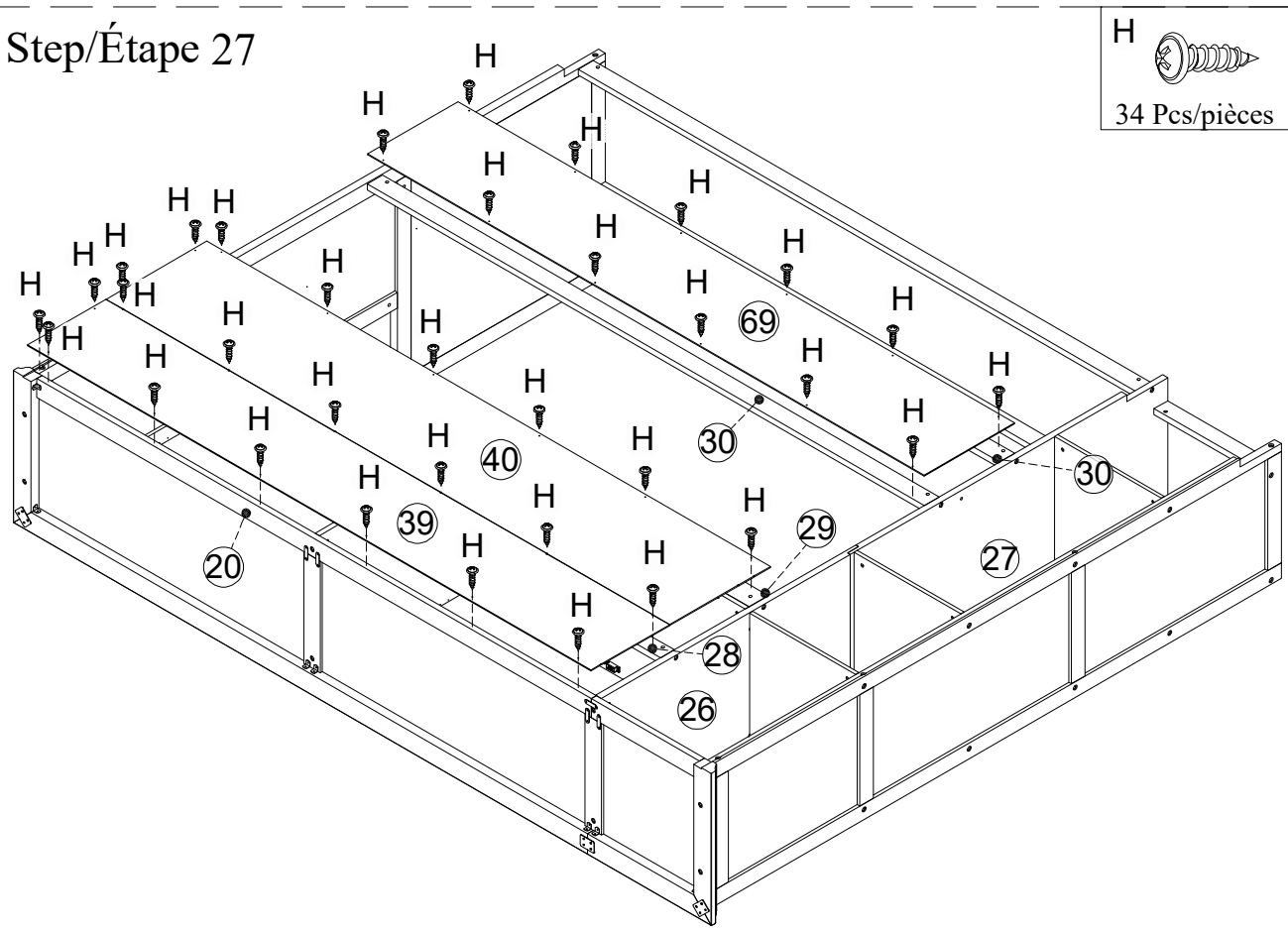

Step/Étape 28

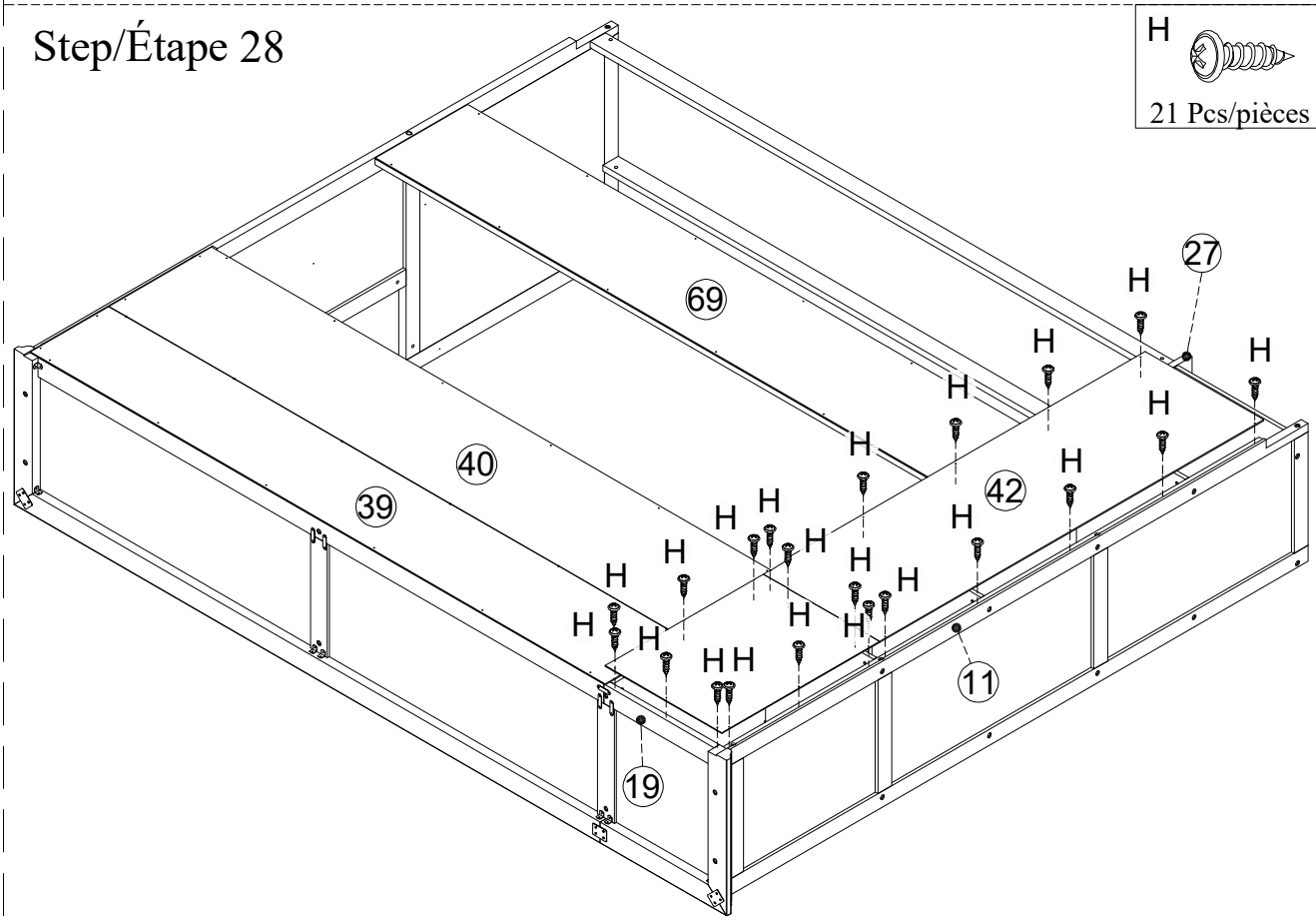

Step/Étape 29

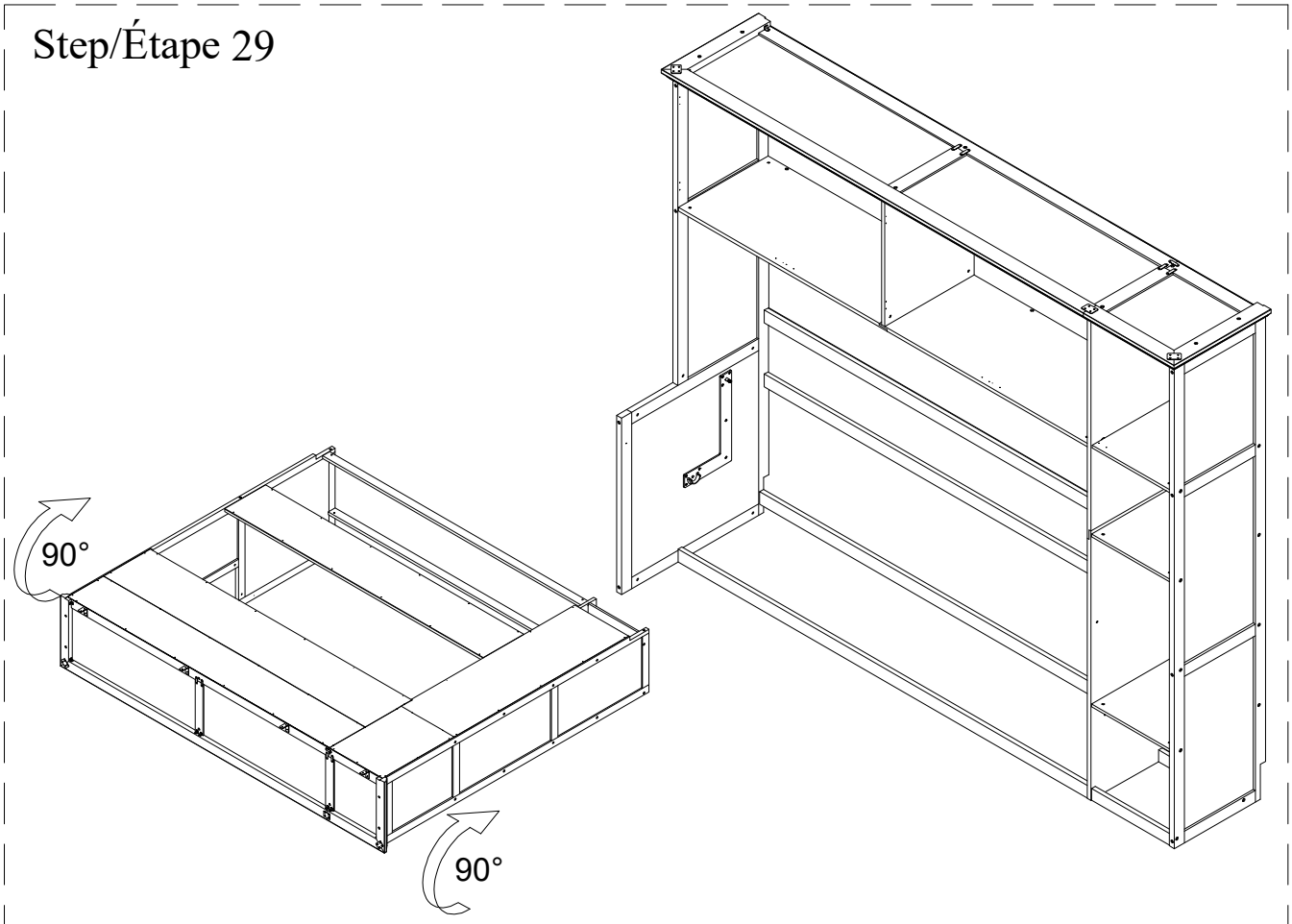

Step/Étape 30

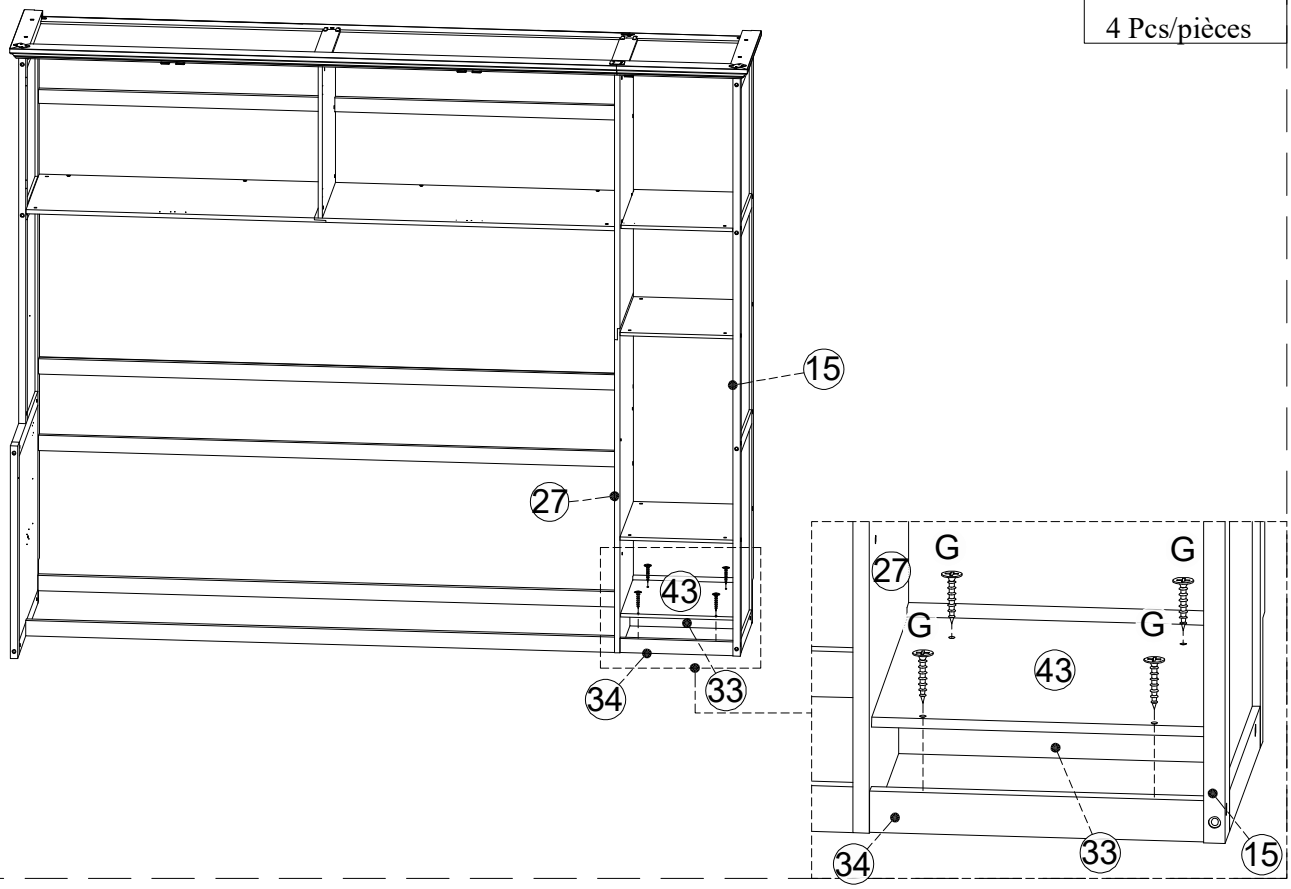

1- Determine the position of the bed in the room.

1- Déterminez la position du lit dans la pièce

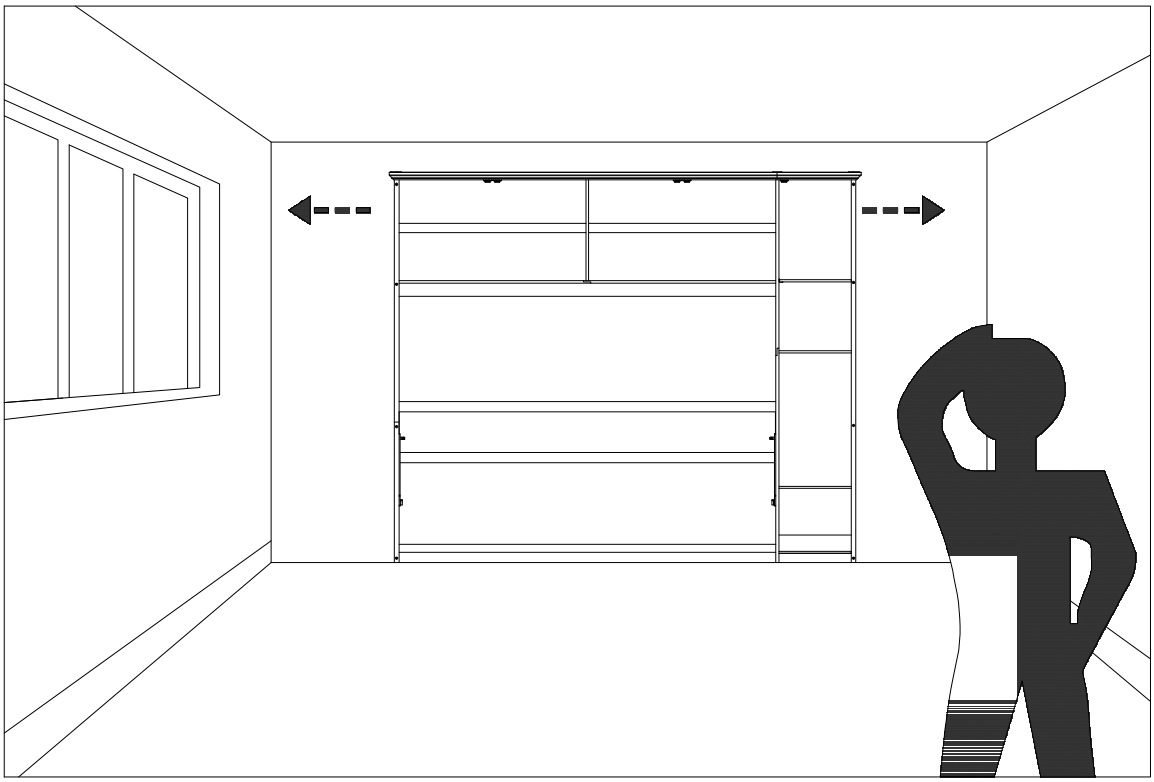

2- Put the bed back in its place. Please keep it vertical and horizontal.

2- Remettez le lit à sa place. Veuillez le garder vertical et horizontal.

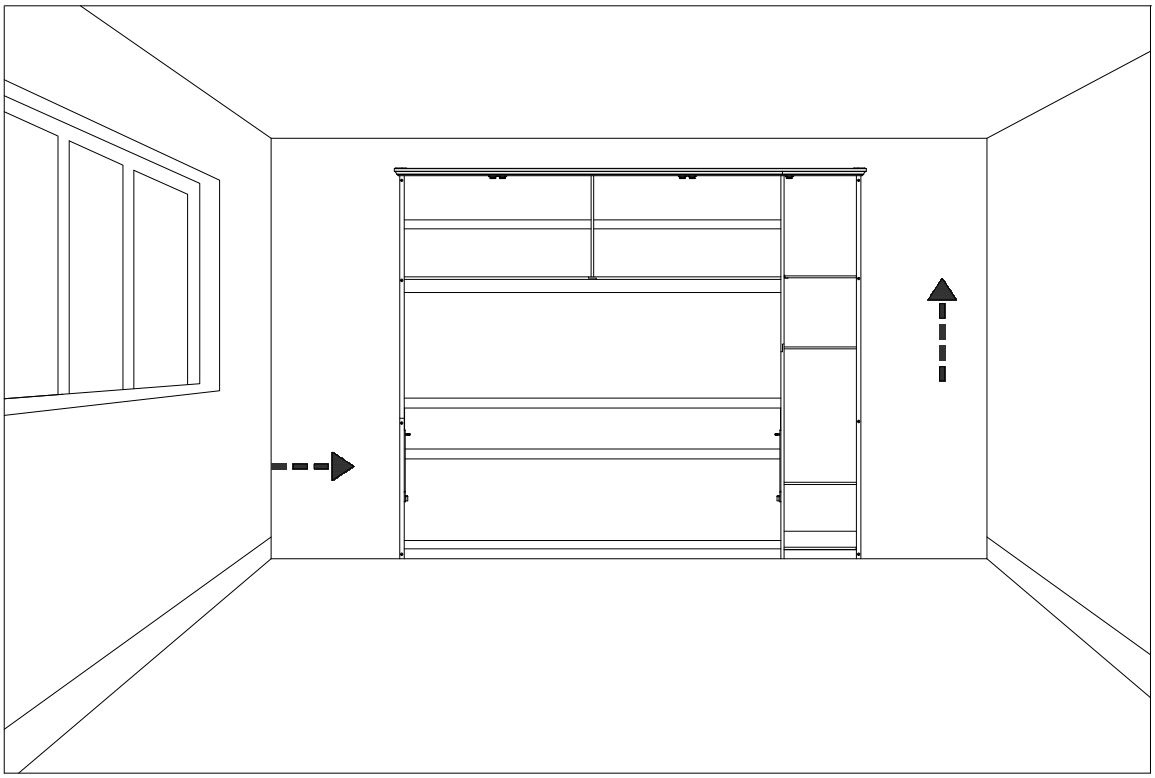

Wall attached item only:

A guide to wall mounting and fixings

Warning
Wall fixing screws are not included, since different wall materials require different types of screws / fixings. Please ensure you use the correct screws / fixings for your type of walls and seek professional advice if you are not sure.

Failure of the product due to incorrect fixings is the responsibility of the installer.

Important: When drilling into the walls always check that there are no hidden wires or pipes etc.

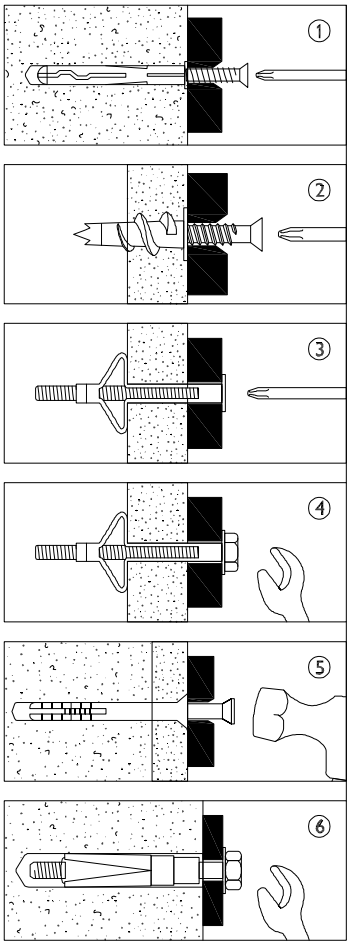

Types of walls
You can use one of the following types of wall plug if your walls are made of brick, breezeblock, concrete, stone or wood.

1. Genral Purpose wall plug
Generally aerated blocks should not be used to support heavy loads, use a specialist fitting in this case. For light loads, general - purpose wall plugs can be used.

2. Plasterboard wall plug
For use when attaching light loads on to plasterboard partitions.

3. Cavity Fixing wall plug
For use with plasterboard partitions or hollow wooden doors.

4. Cavity Fixing - Heavy Duty wall plug
For use when fitting or supporting heavy loads such as shelving, wall cabinets and coat racks.

5. Hammer Fixing wall plug
For use with walls stuck with plasterboard. The hammer fixing allows it to be fixed to the wall rather than the plasterboard. Always check the fixing is secure to the retaining wall.

6. Shield Anchor wall plug - Heavy loads
For use with heavier load such as TV and HI-Fi speskers and satellite dishes etc.

Care and maintenance
Safety: Periodically check all fittings and wall fixings to ensure they have not come loose and retighten as necessary.

Article à fixer au mur uniquement :

Guide de montage mural et de fixation

Attention
Les vis de fixation murale ne sont pas incluses, car différents matériaux de mur nécessitent différents types de vis / fixations.
Veuillez vous assurer d'utiliser les vis / fixations correctes pour votre type de murs et demander conseil à un professionnel si vous n'êtes pas sûr.

L'échec du produit en raison de fixations incorrectes est de la responsabilité de l'installateur.

Important : Lorsque vous percez dans les murs, vérifiez toujours s'il n'y a pas de fils électriques ou de tuyaux cachés, etc

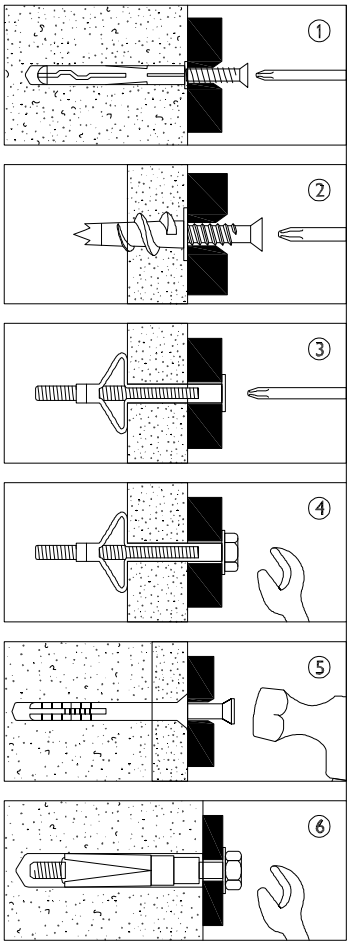

Types de murs
Vous pouvez utiliser l'un des types de cheville murale suivants si vos murs sont en brique, parpaing, béton, pierre ou bois.

1. Cheville murale polyvalente
En général, les blocs aérés ne devraient pas être utilisés pour supporter des charges lourdes. Dans ce cas, utilisez un dispositif de fixation spécialisé. Pour les charges légères, des chevilles murales polyvalentes peuvent être utilisées.

2. Cheville pour plaque de plâtre
Pour une utilisation lors de la fixation de charges légères sur des cloisons en placoplâtre

3. Cheville de fixation pour cavité
À utiliser avec des cloisons en placoplâtre ou des portes en bois creuses.

4. Cheville de fixation pour cavité - à usage intensif
À utiliser lors de l'installation ou du support de charges lourdes telles que des étagères, des armoires murales et des porte-manteaux.

5. Cheville de fixation à marteau
À utiliser avec des murs recouverts de placoplâtre. La fixation à marteau permet de la fixer au mur plutôt qu'au placoplâtre. Vérifiez toujours que la fixation est bien sécurisée au mur porteur.

6. Cheville à ancre de protection - Charges lourdes
À utiliser avec des charges plus lourdes telles que des téléviseurs, des enceintes hi-fi et des antennes satellites, etc.

Entretien et maintenance
Sécurité: Périodiquement, vérifiez tous les raccords et fixations murales pour vous assurer qu'ils ne se sont pas desserrés et resserrez-les si nécessaire.

WOOD STUD WALL / MUR À OSSATURE BOIS

OPTION 1:

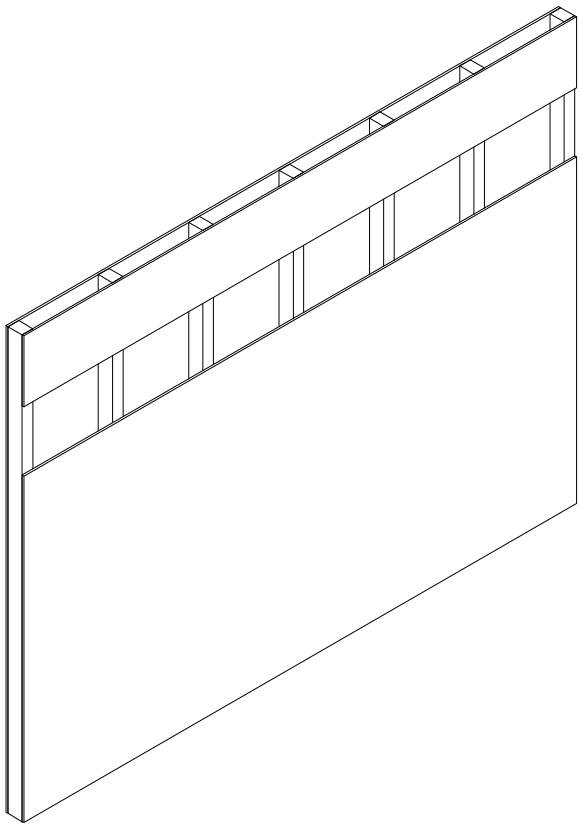

OPTION 1:

H2	O	L2
6 Pcs/pièces	3 Pcs/pièces	#5*70mm 6 Pcs/pièces

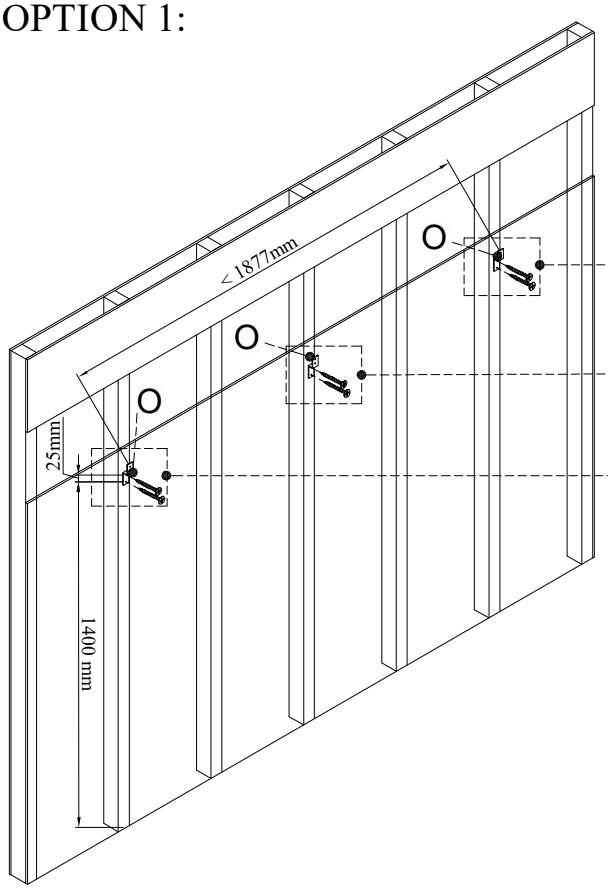

WOOD STUD WALL
MUR À OSSATURE BOIS

The Z bracket must be secured to the wall stud to increase stability.

Le support en Z doit être fixé sur le montant du mur pour une meilleure stabilité.

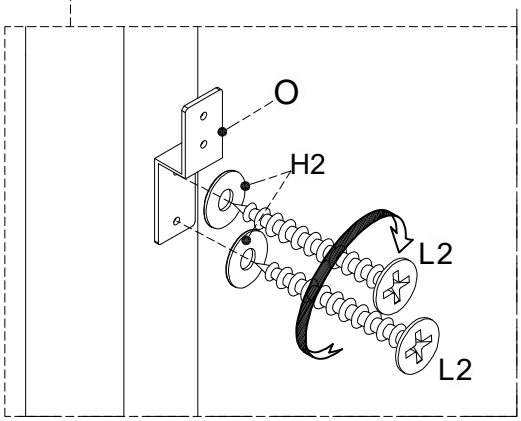

OPTION 1:

H2	H1
6 Pcs/pièces	6 Pcs/pièces

WOOD STUD WALL / MUR À OSSATURE BOIS

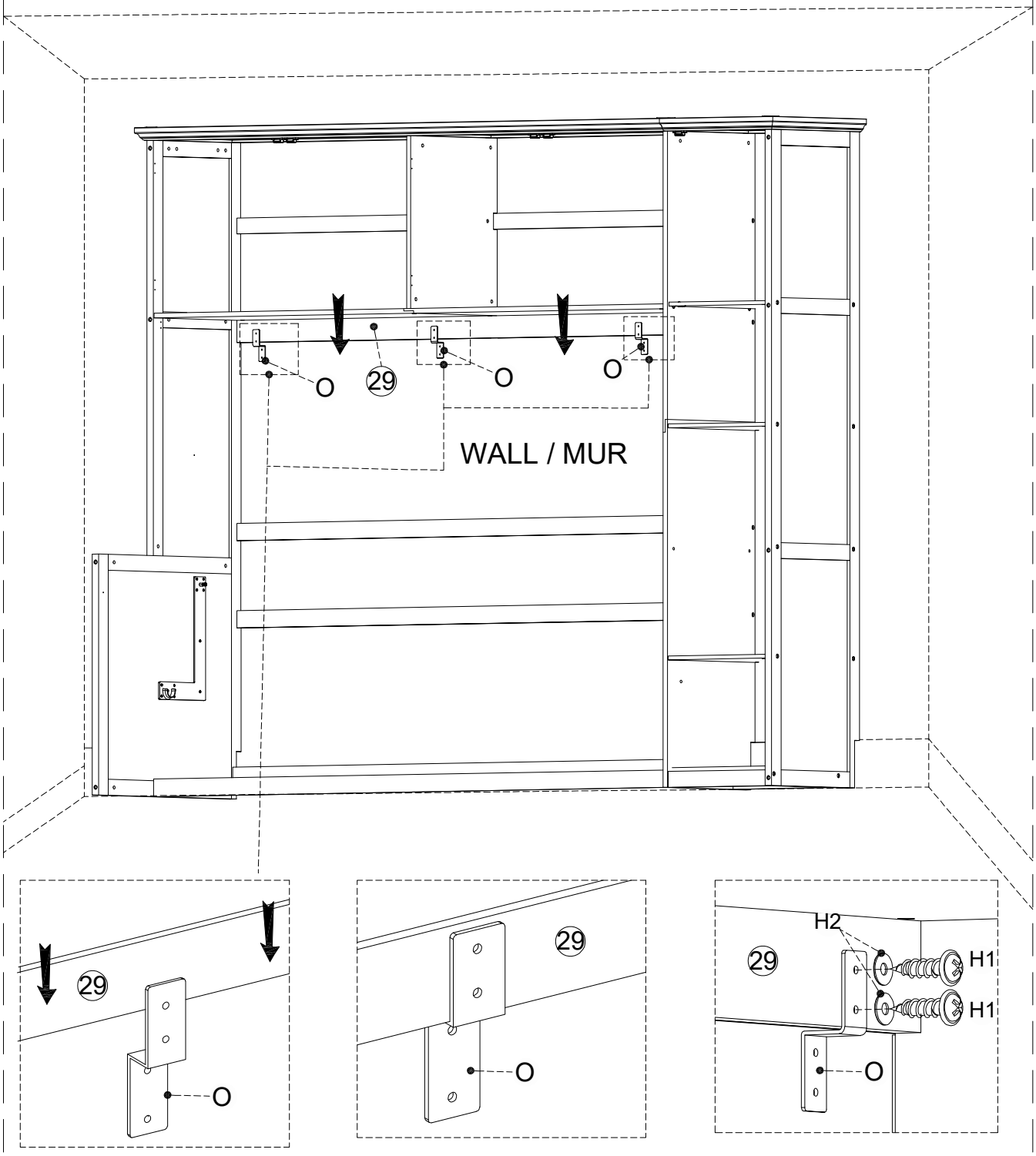

Raise the bed from its previously fixed position, press it against the wall and lower it (as shown).

Soulevez le lit de sa position précédemment fixée, appuyez-le contre le mur et abaissez-le (comme indiqué).

Two people
Deux personnes

Step/Étape 31

WOOD STUD WALL / MUR À OSSATURE BOIS

Note: Align with the solid wall structure (internal stud/beam) so Part L is secured more firmly
Alignez-vous avec la structure solide du mur (montant/poutre interne) pour que la pièce L soit fixée plus solidement

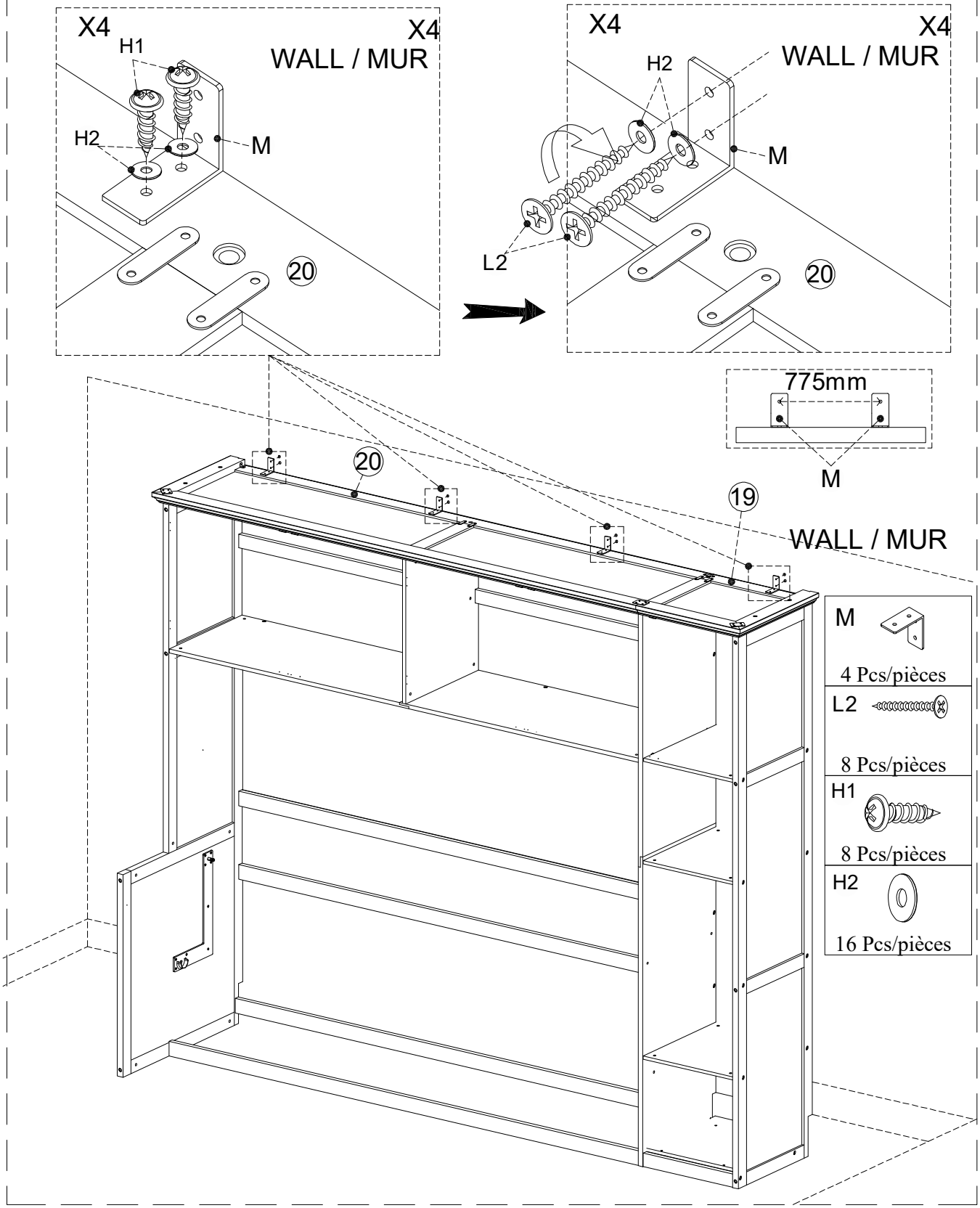

OPTION 2: CONCRETE WALL/MUR EN BÉTON

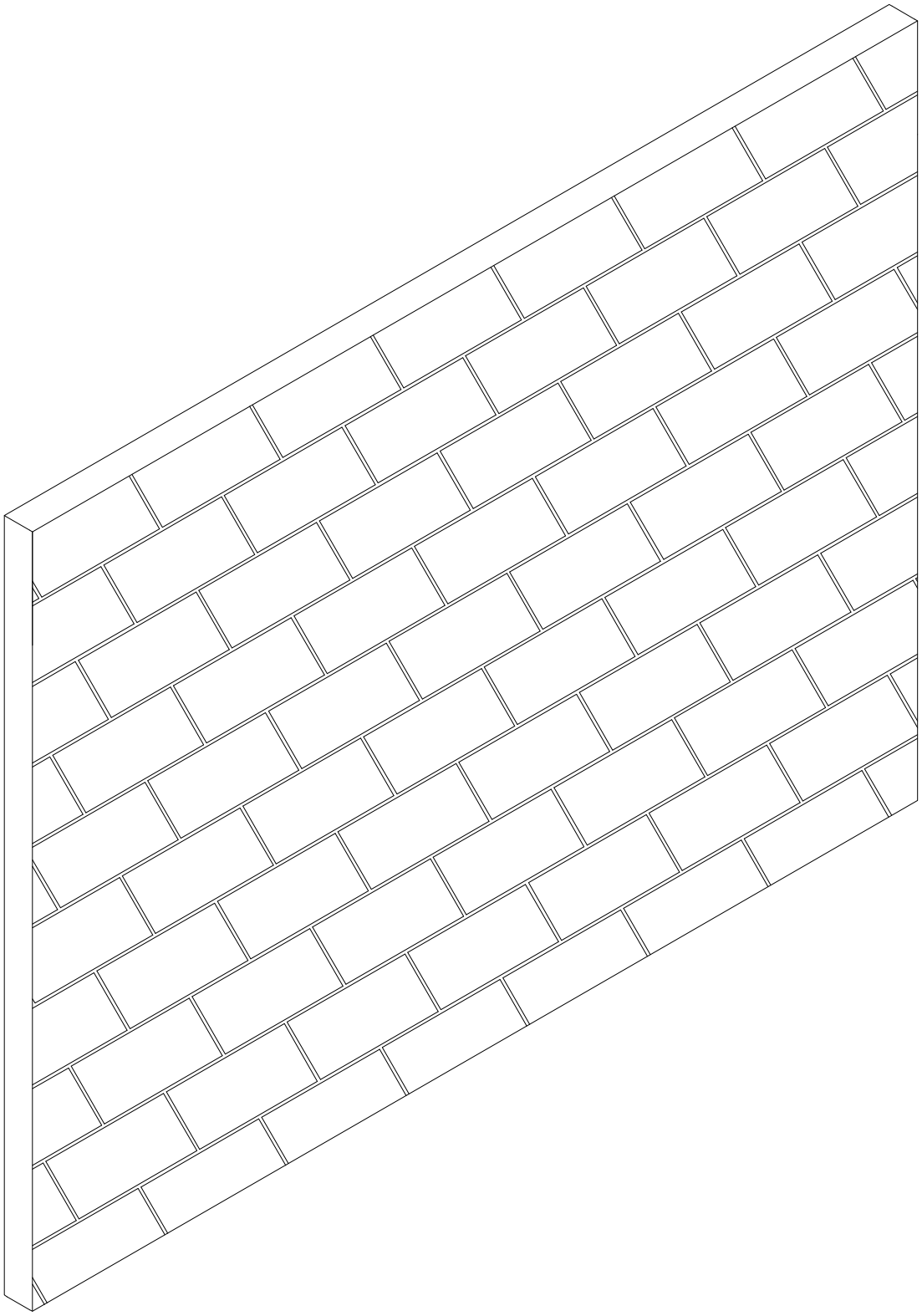

Your house wall is concrete, you should choose this option 2

Le mur de votre maison est en béton, vous devriez choisir cette option 2

3- Mark the points drill holes according to actual products
3- Marquez les points de perçage en fonction des produits réels.

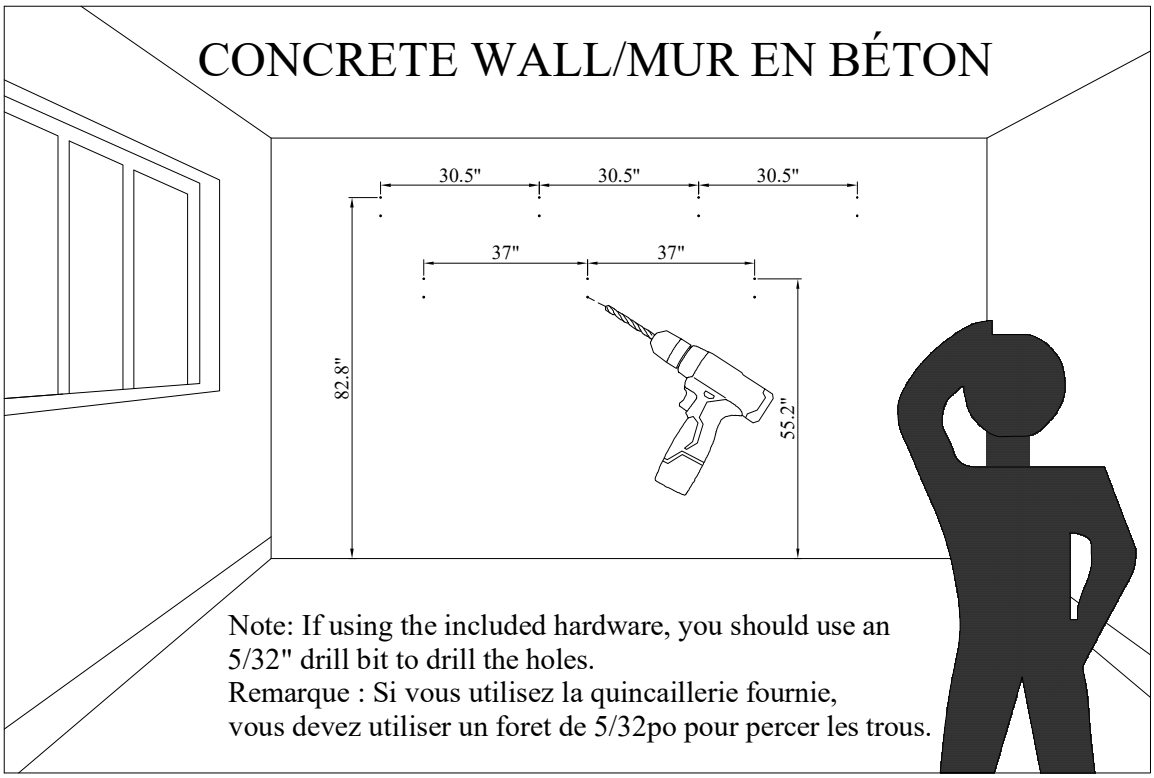

Note: If using the included hardware, you should use an 5/32" drill bit to drill the holes.
Remarque : Si vous utilisez la quincaillerie fournie, vous devez utiliser un foret de 5/32po pour percer les trous.

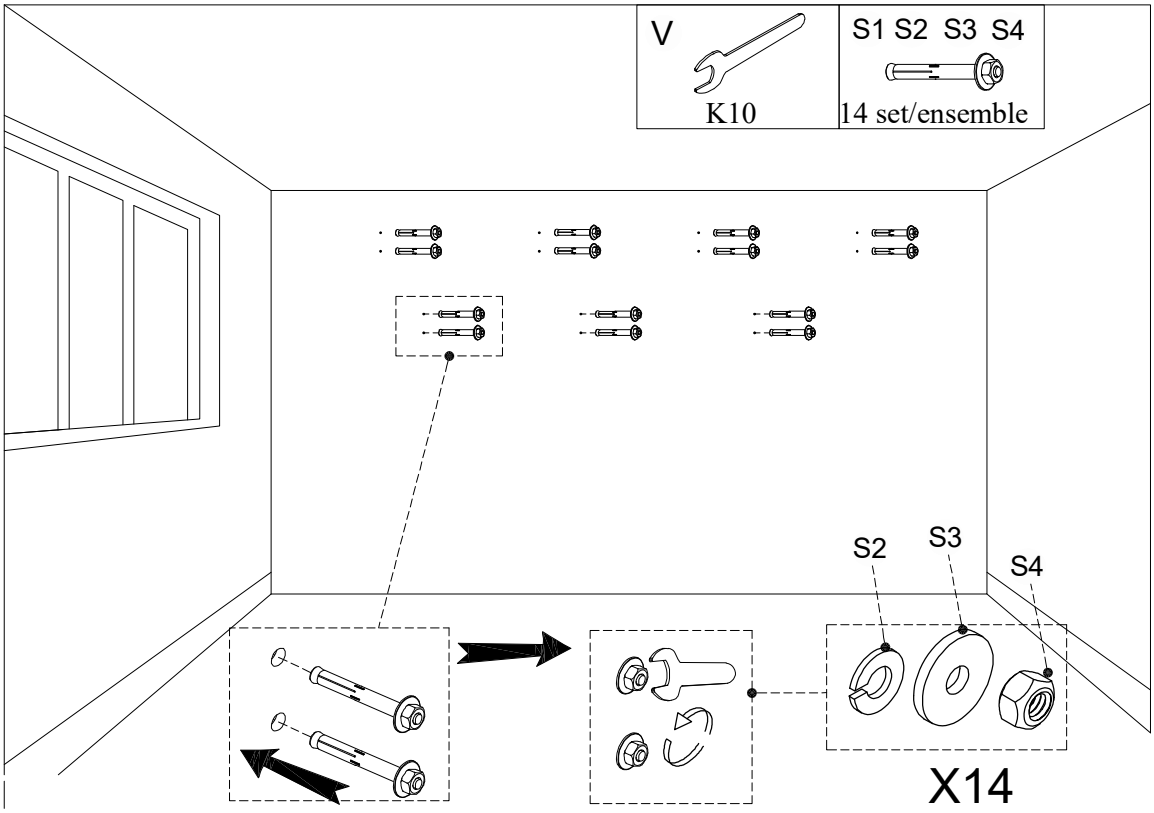

Store carefully for later assembly.
Conservez soigneusement pour un assemblage ultérieur.

Step/Étape 32

CONCRETE WALL/MUR EN BÉTON

5 - Lift the bed into the marked position at the front, then secure it using the nut set.
5 - Soulevez le lit à la position marquée à l'avant, puis fixez-le à l'aide du jeu d'écrous.

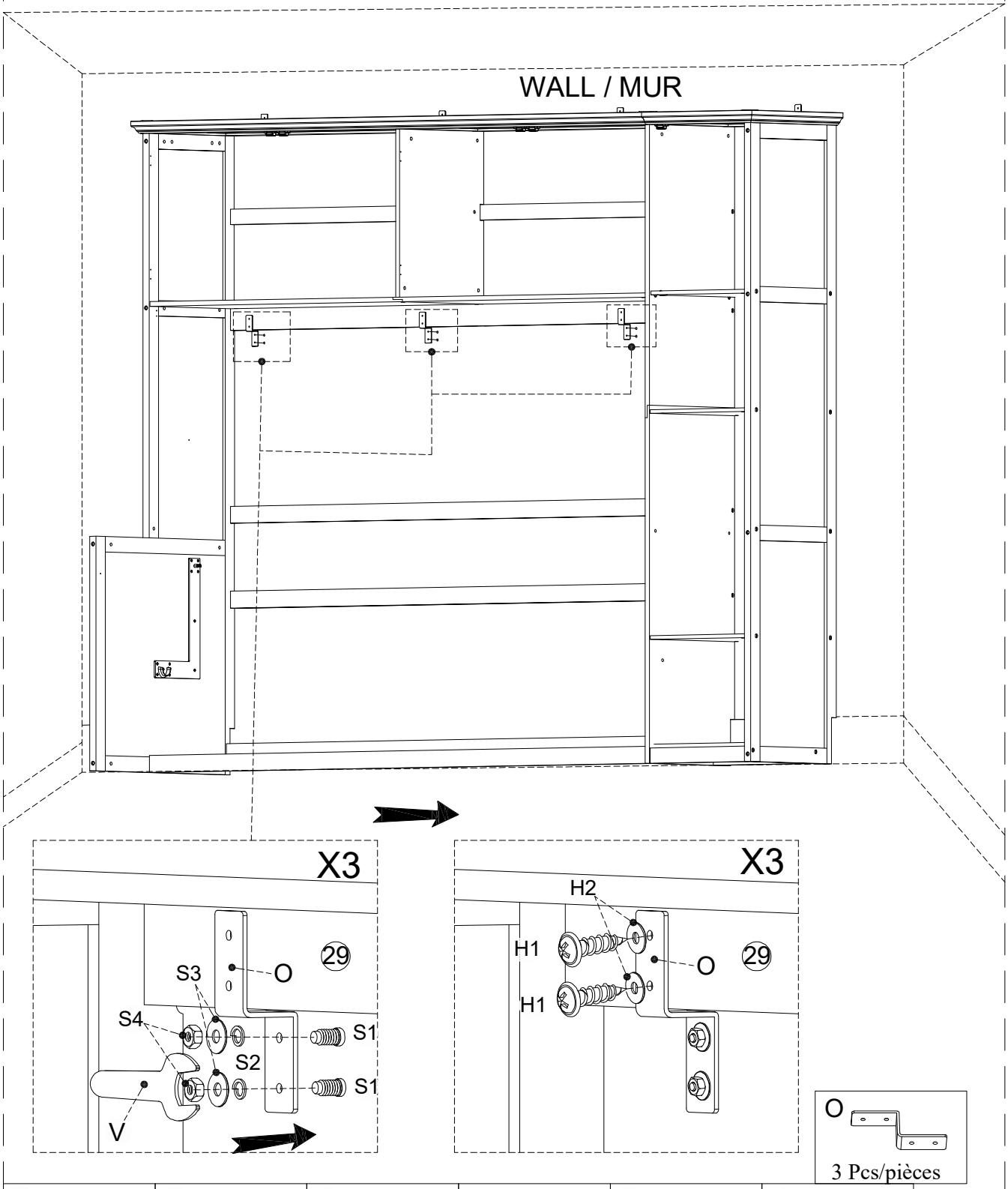

S2	S3	S4	V	H1	H2
6 Pcs/pièces	6 Pcs/pièces	6 Pcs/pièces	K10	6 Pcs/pièces	6 Pcs/pièces

Step/Étape 33 CONCRETE WALL/MUR EN BÉTON

6 - Continue securing the bed to the wall using the L-shaped metal bracket on the top.
6 - Continuez à fixer le lit au mur à l'aide de l'équerre métallique en L située sur le dessus.

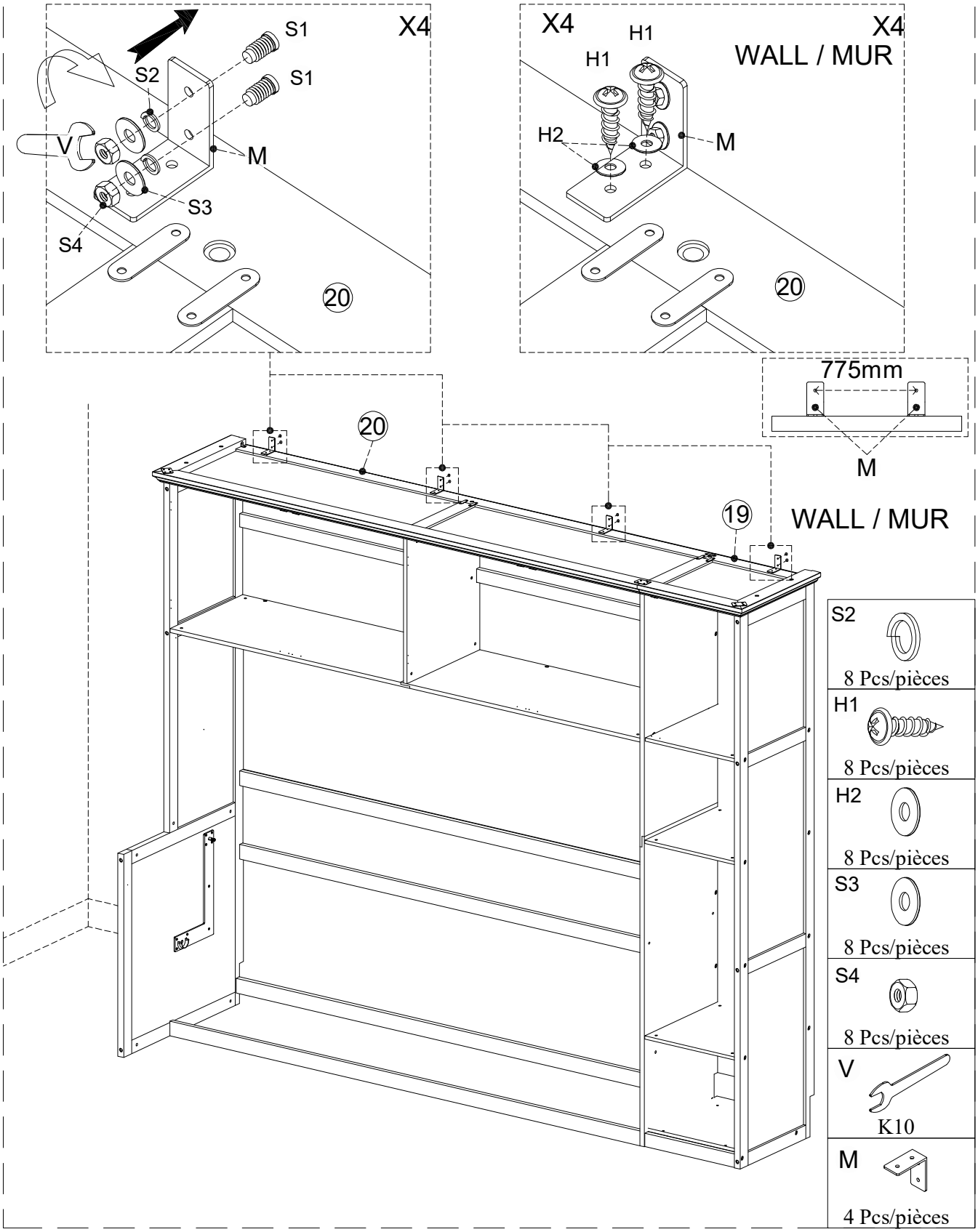

Step/Étape 34

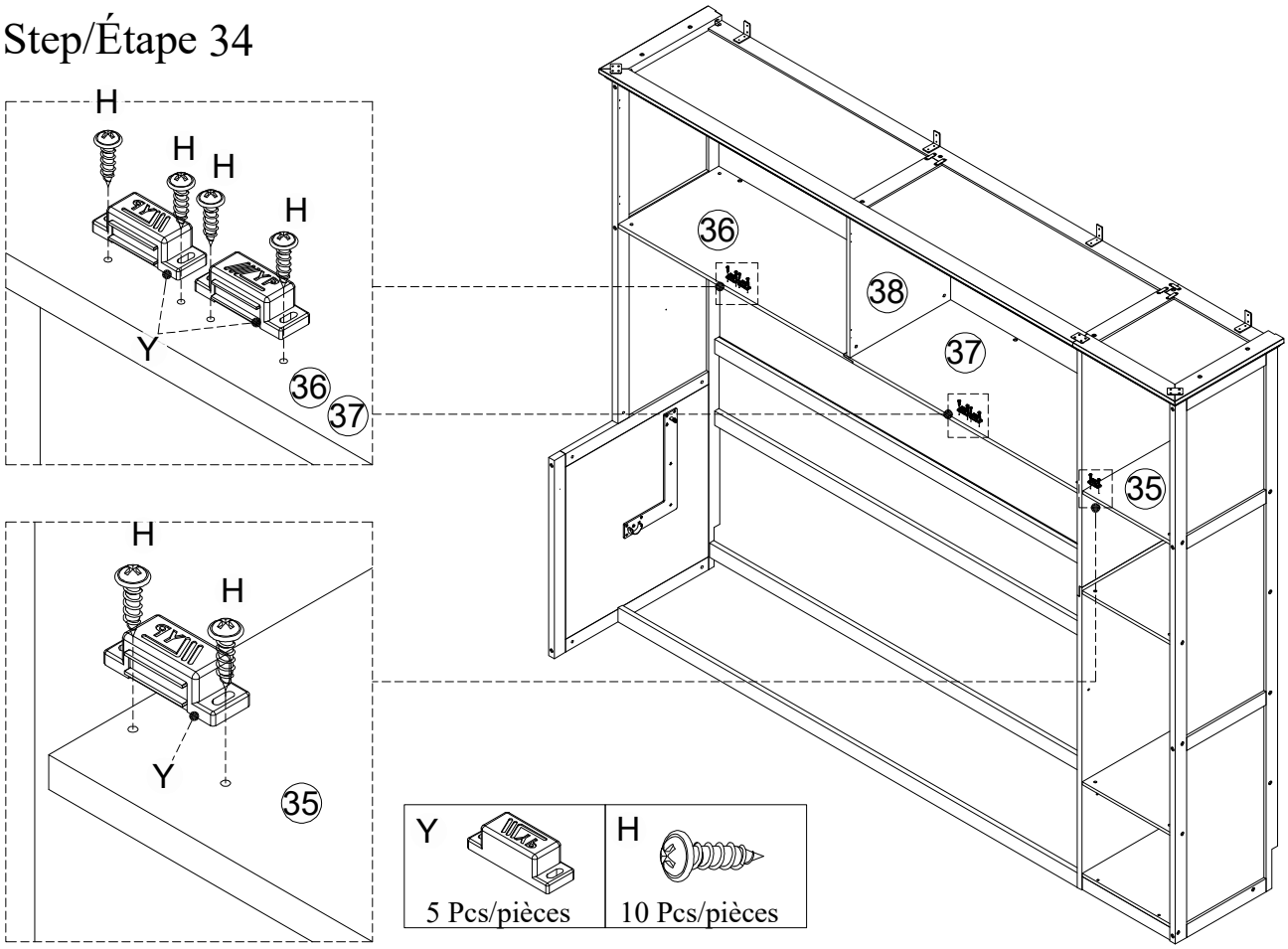

Step/Étape 35

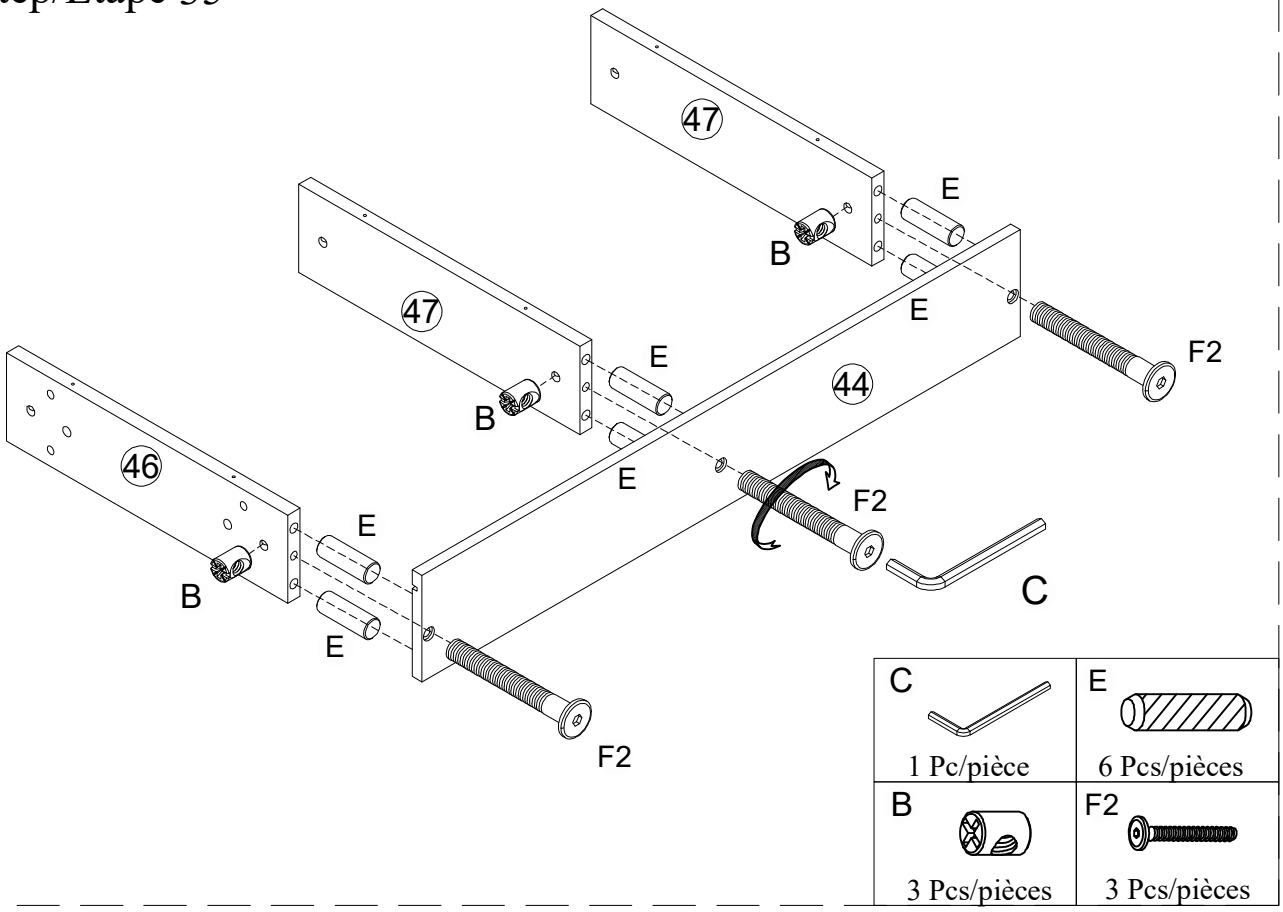

Step/Étape 36

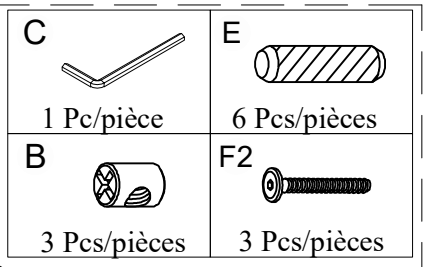

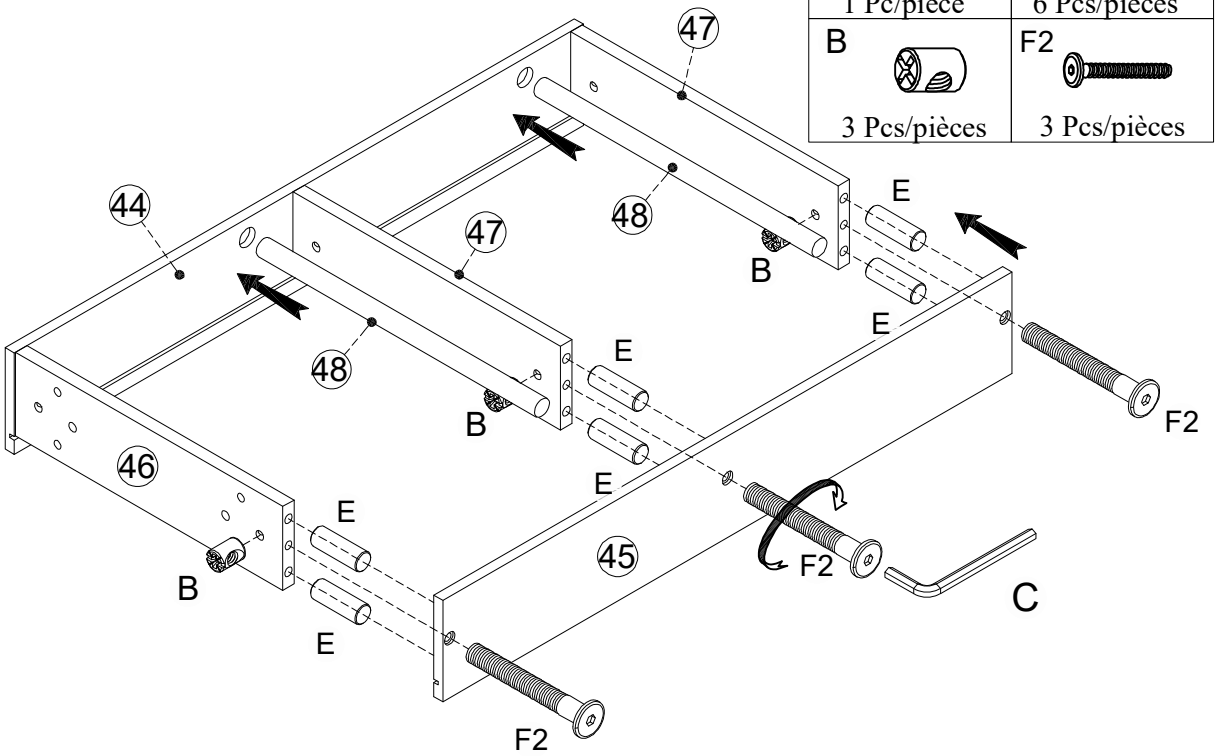

Step/Étape 37

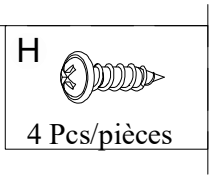

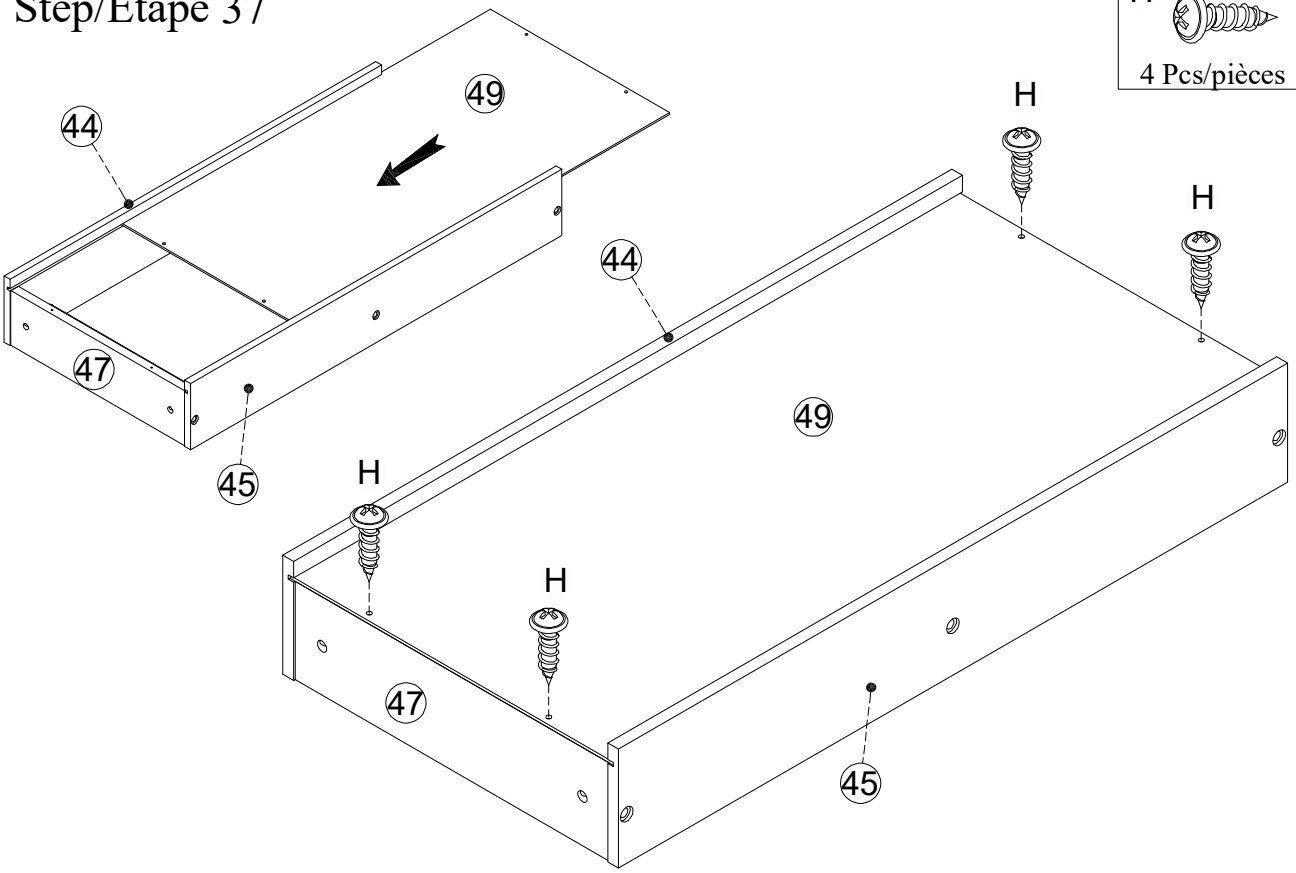

Step/Étape 38

D1	E1
4 Pcs/pièces	2 Pcs/pièces

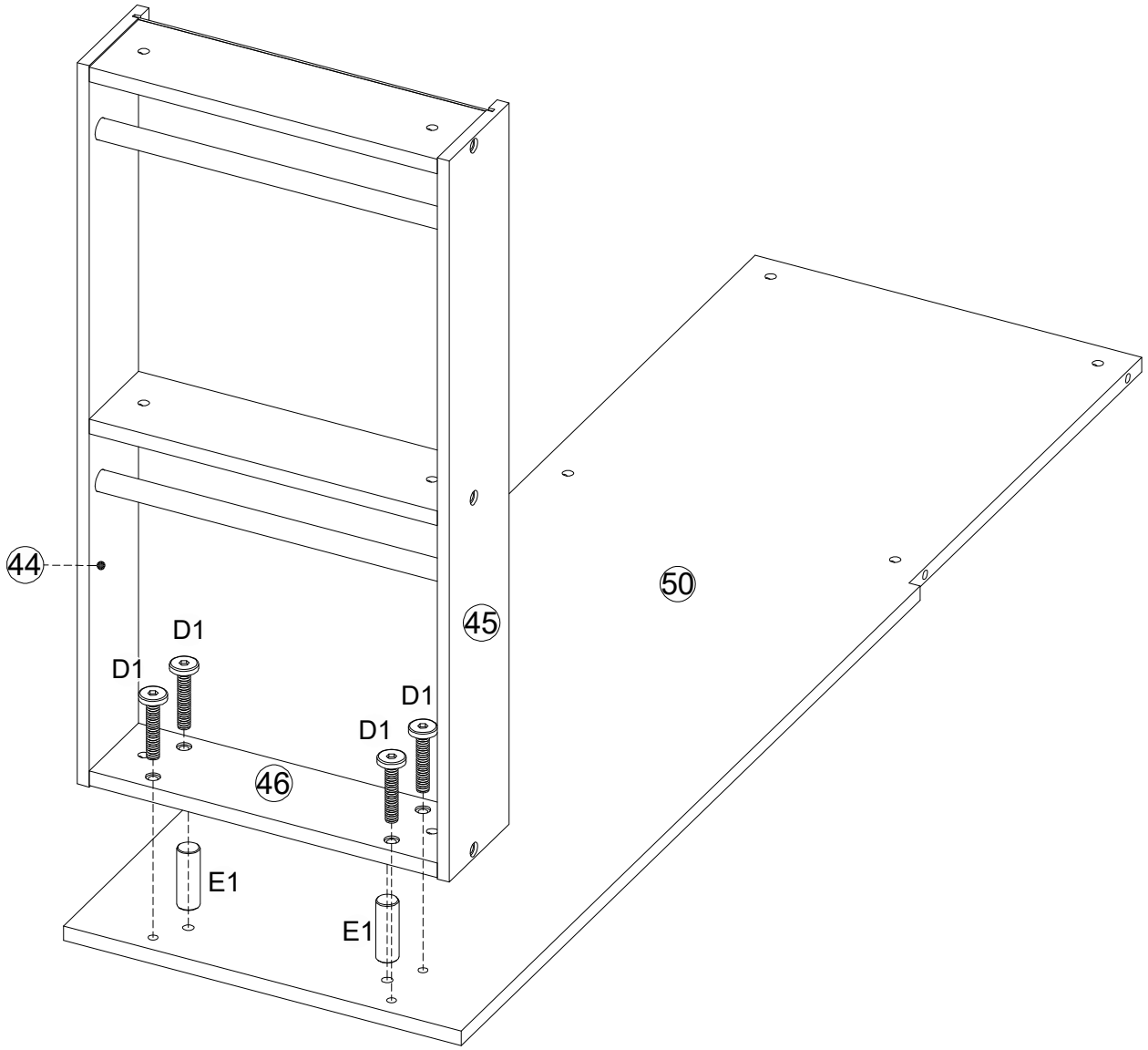

Step/Étape 39

C	B	F
1 Pc/pièce	4 Pcs/pièces	4 Pcs/pièces

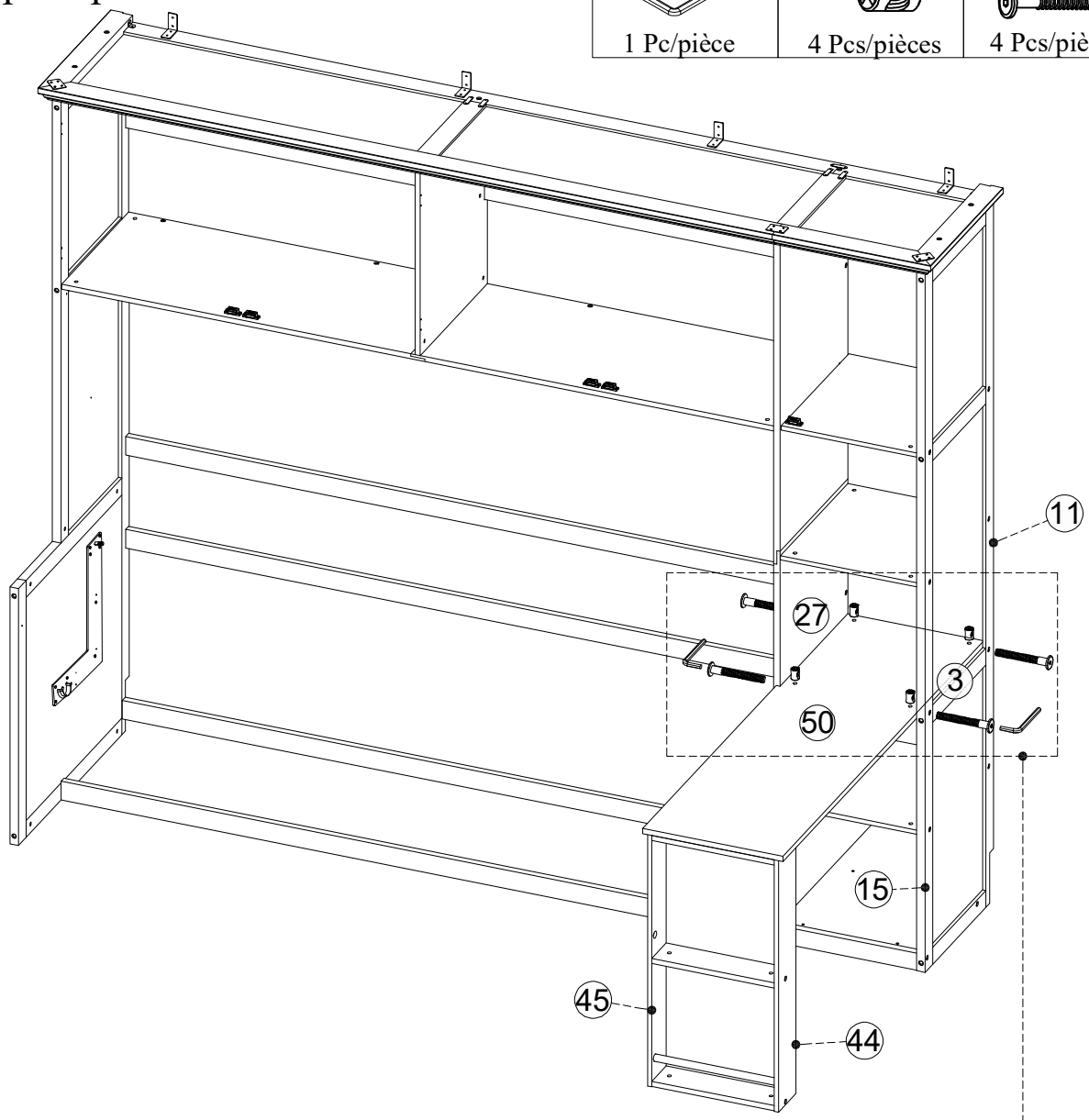

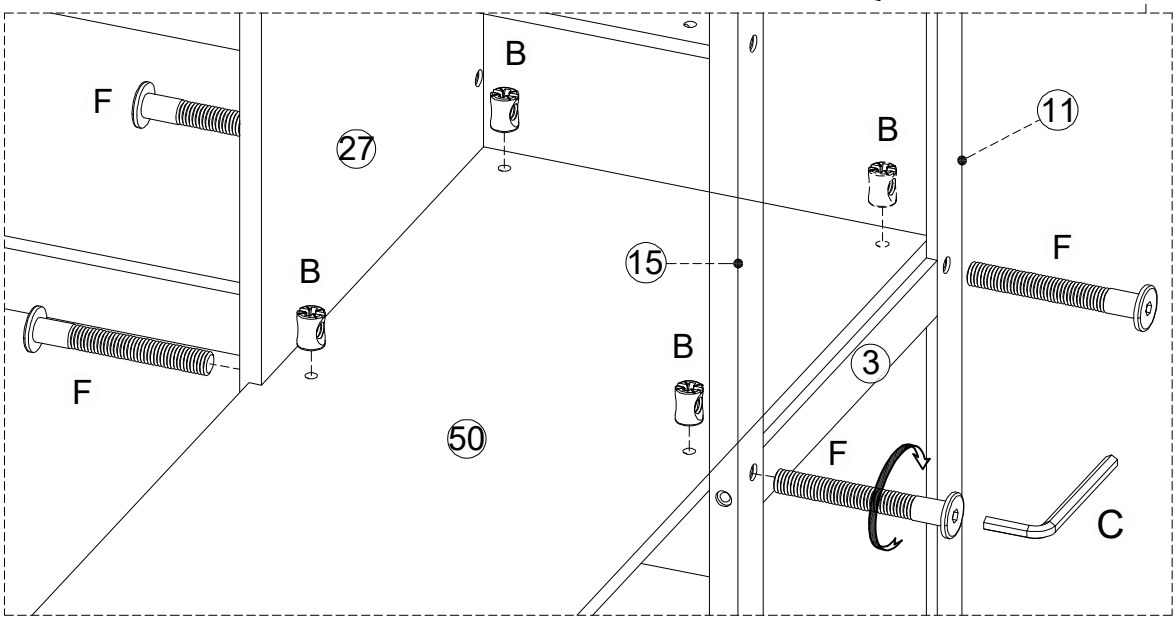

Step/Étape 40

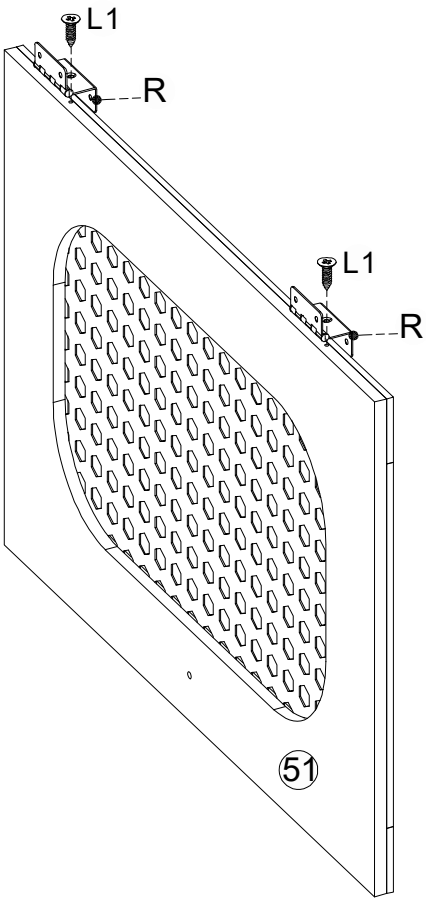

L1	R
2 Pcs/pièces	2 Pcs/pièces

Step/Étape 41

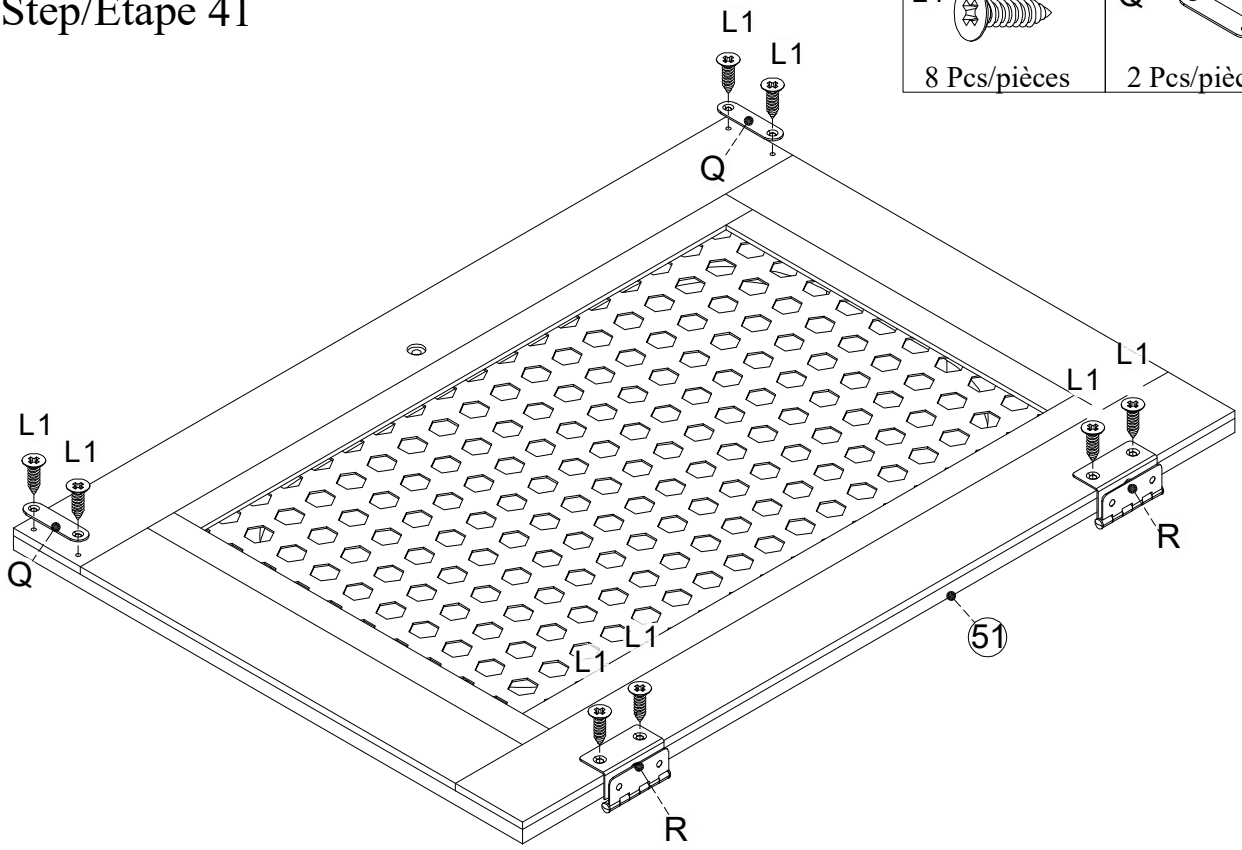

L1	Q
8 Pcs/pièces	2 Pcs/pièces

Step/Étape 42

L1	R
8 Pcs/pièces	8 Pcs/pièces

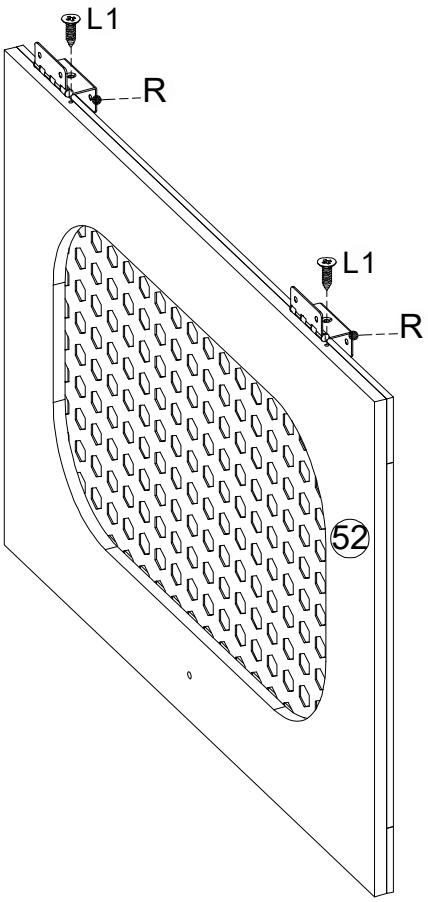

X4

Step/Étape 43

L1	Q
32 Pcs/pièces	8 Pcs/pièces

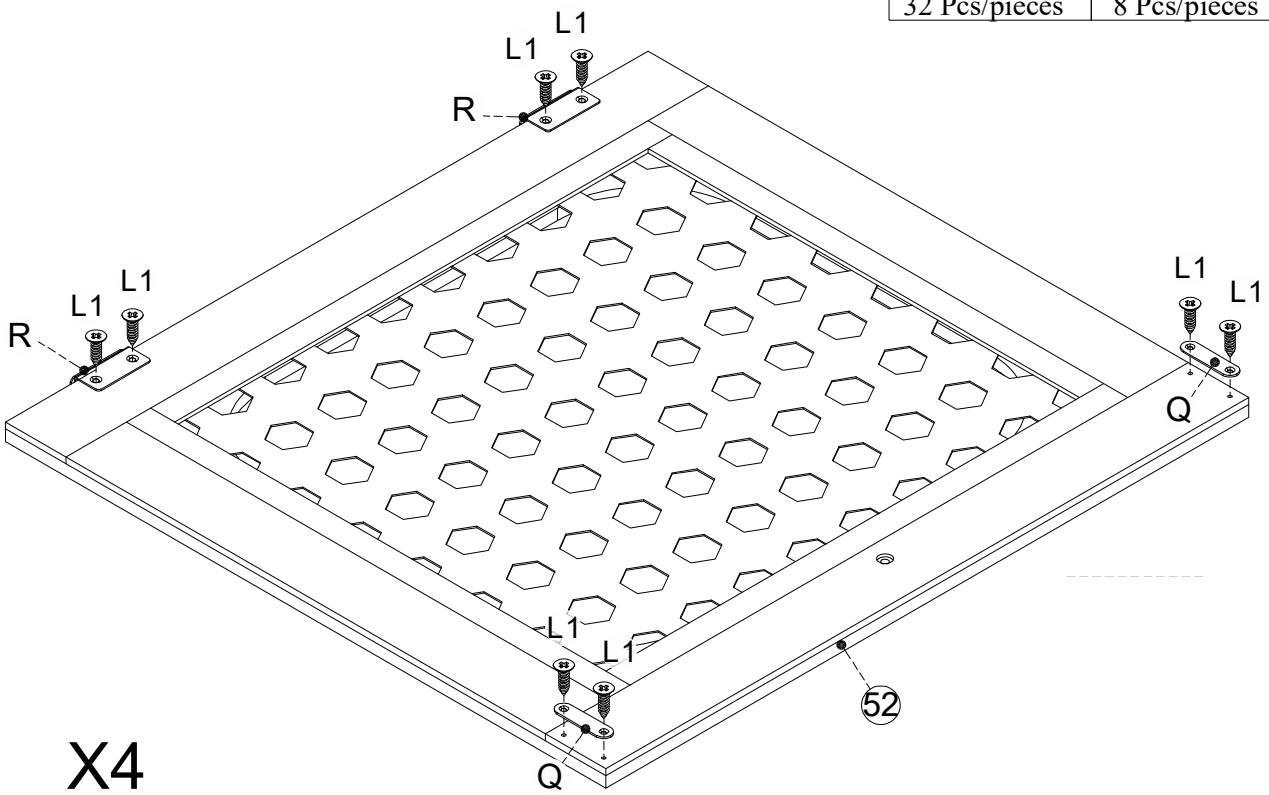

X4

Step/Étape 44

I	J	L
2 Pcs/pièces	2 Pcs/pièces	8 Pcs/pièces

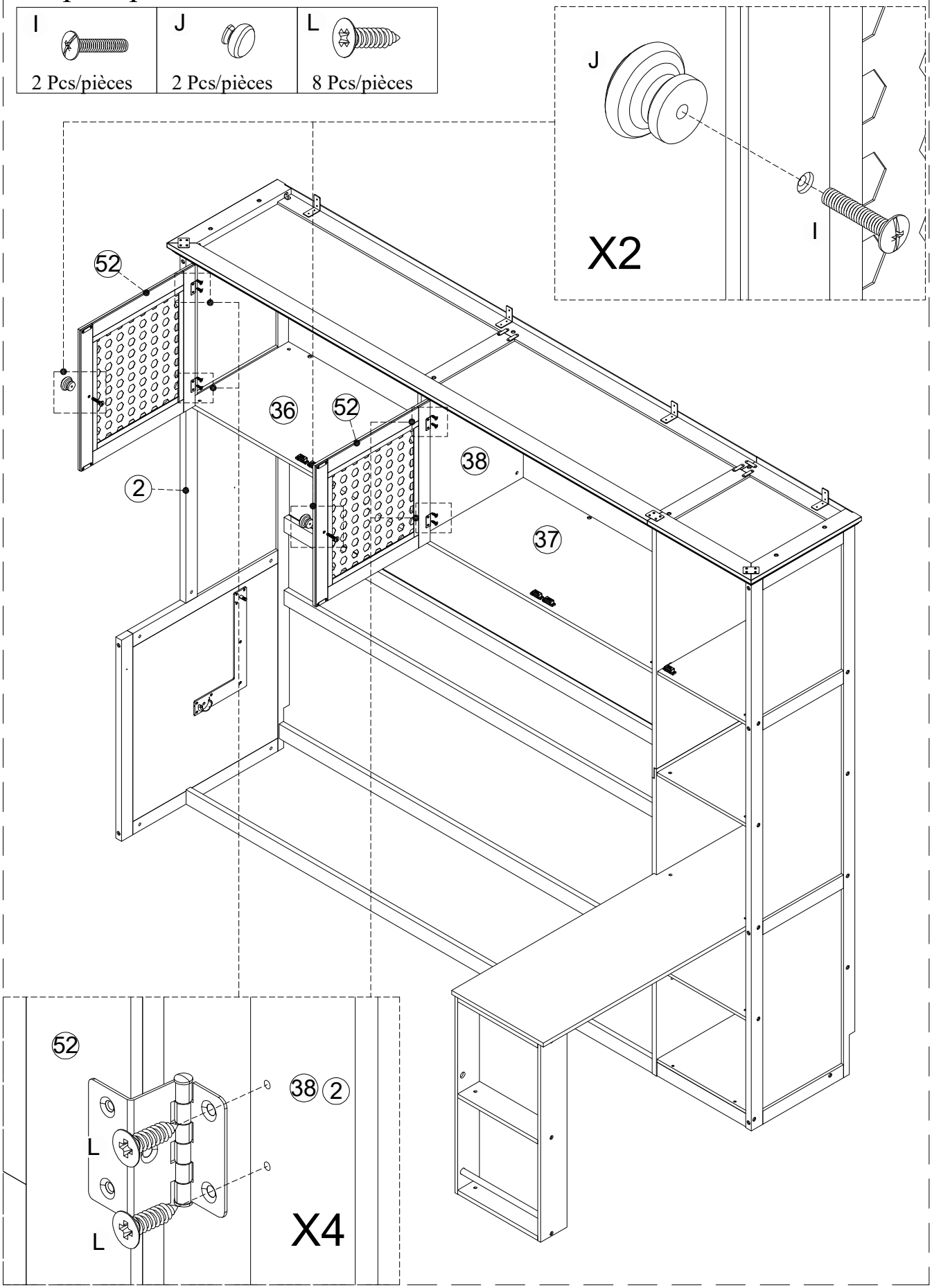

Step/Étape 45

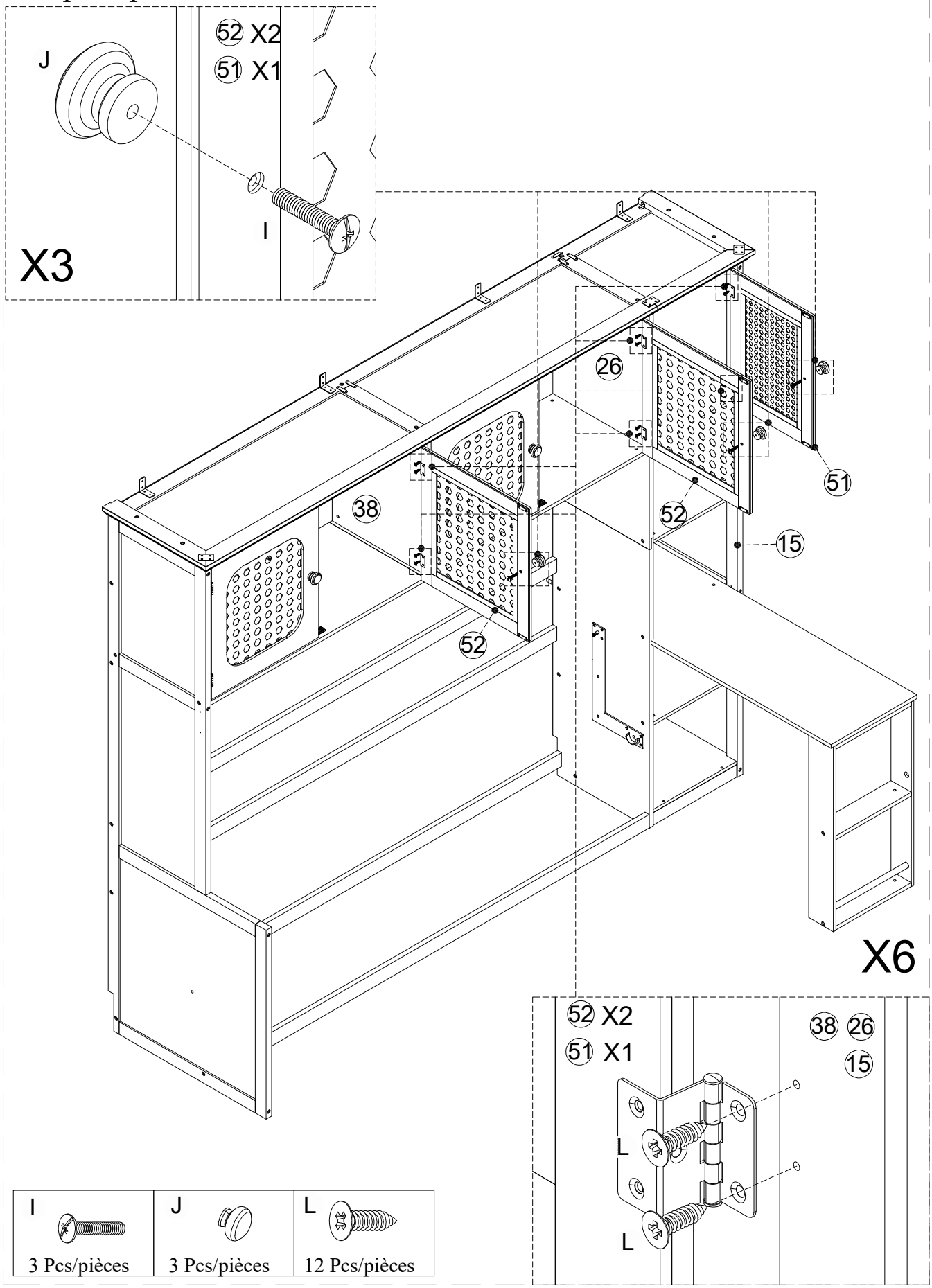

I	J	L
3 Pcs/pièces	3 Pcs/pièces	12 Pcs/pièces

Step/Étape 46

C	T	S
2 Pcs/pièces	3 Pcs/pièces	3 Pcs/pièces

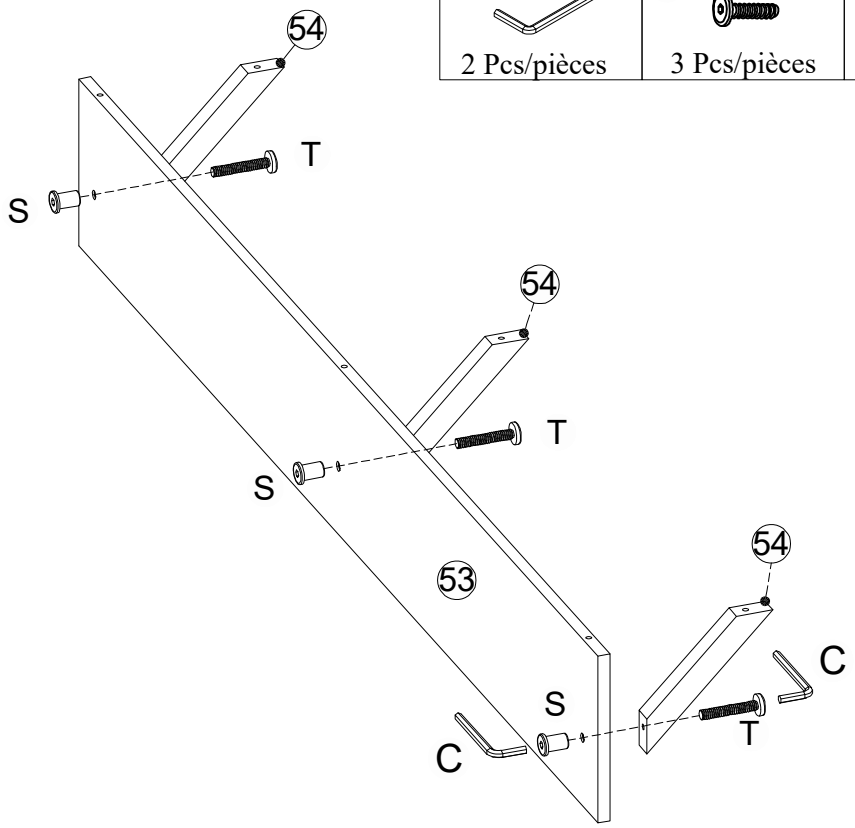

Step/Étape 47

C	T	S
2 Pcs/pièces	1 Pcs/pièces	1 Pcs/pièces
	B	F
	1 Pcs/pièces	1 Pcs/pièces

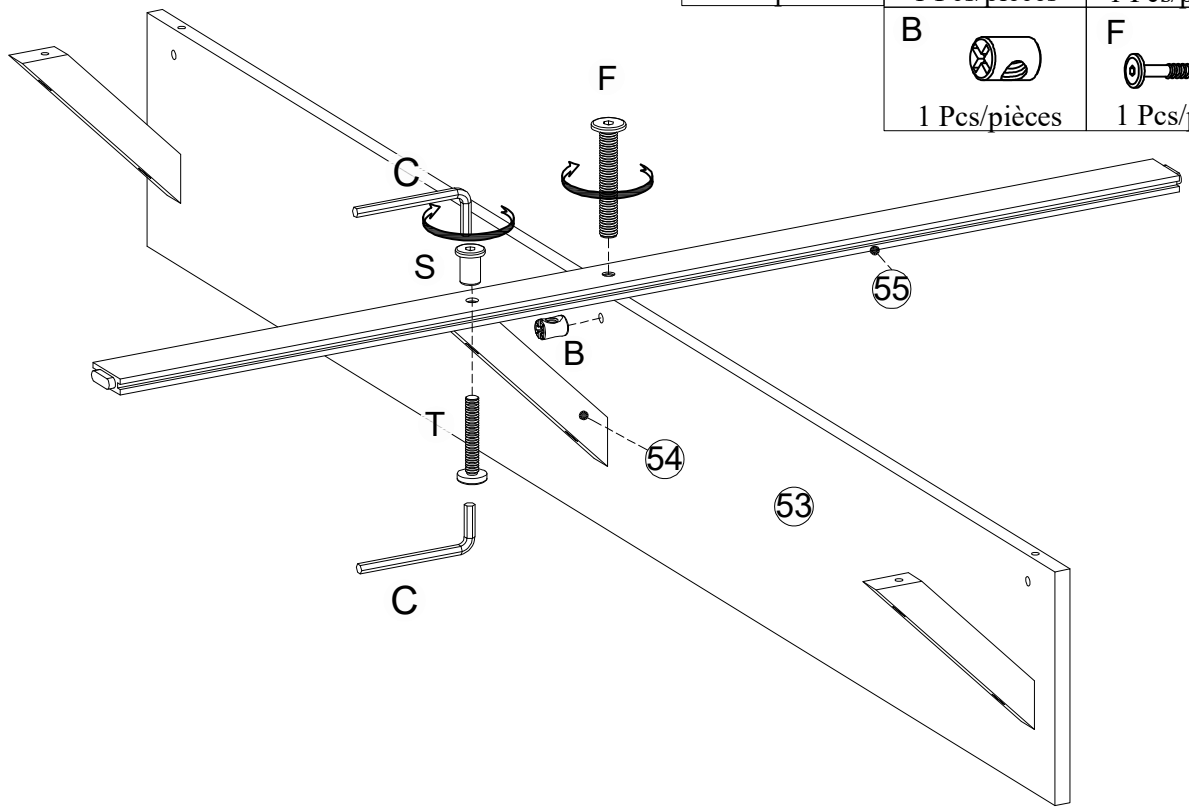

Step/Étape 48

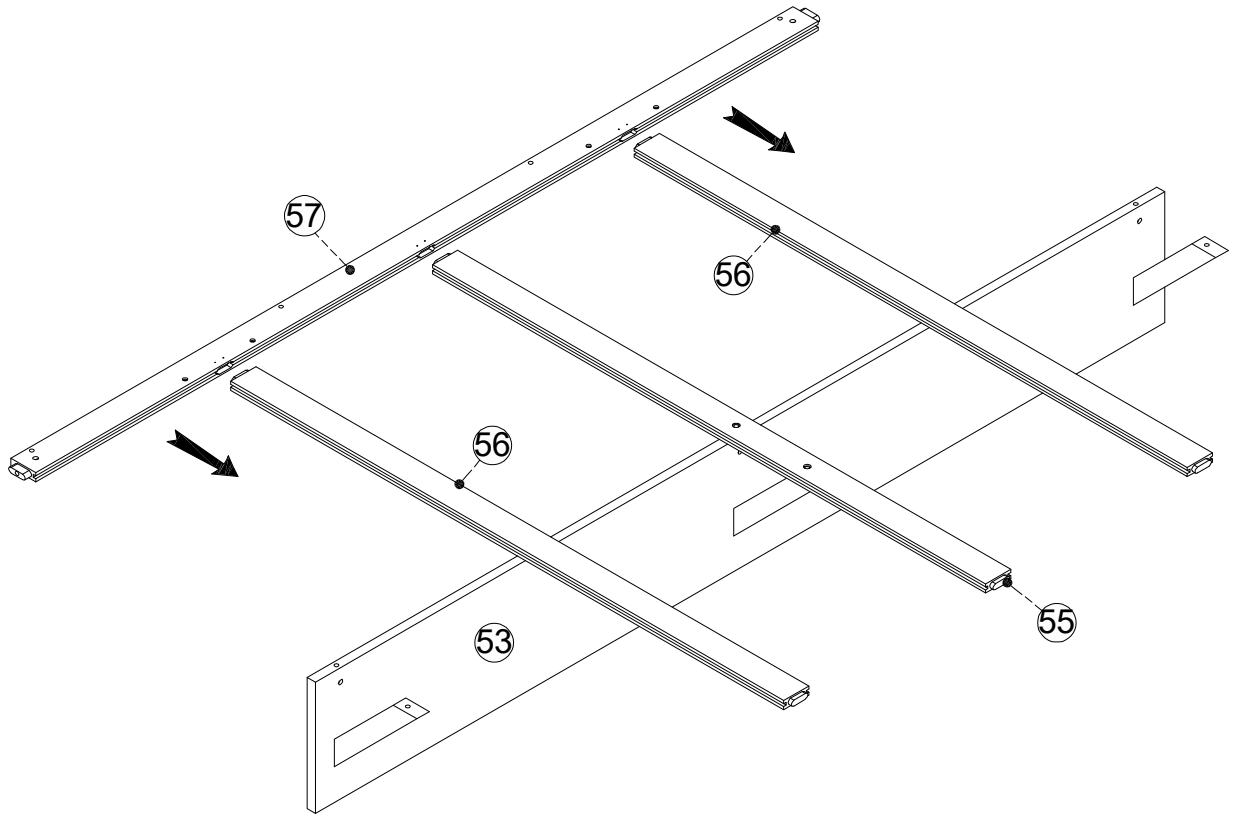

Step/Étape 49

X	L
3 Pcs/pièces	12 Pcs/pièces

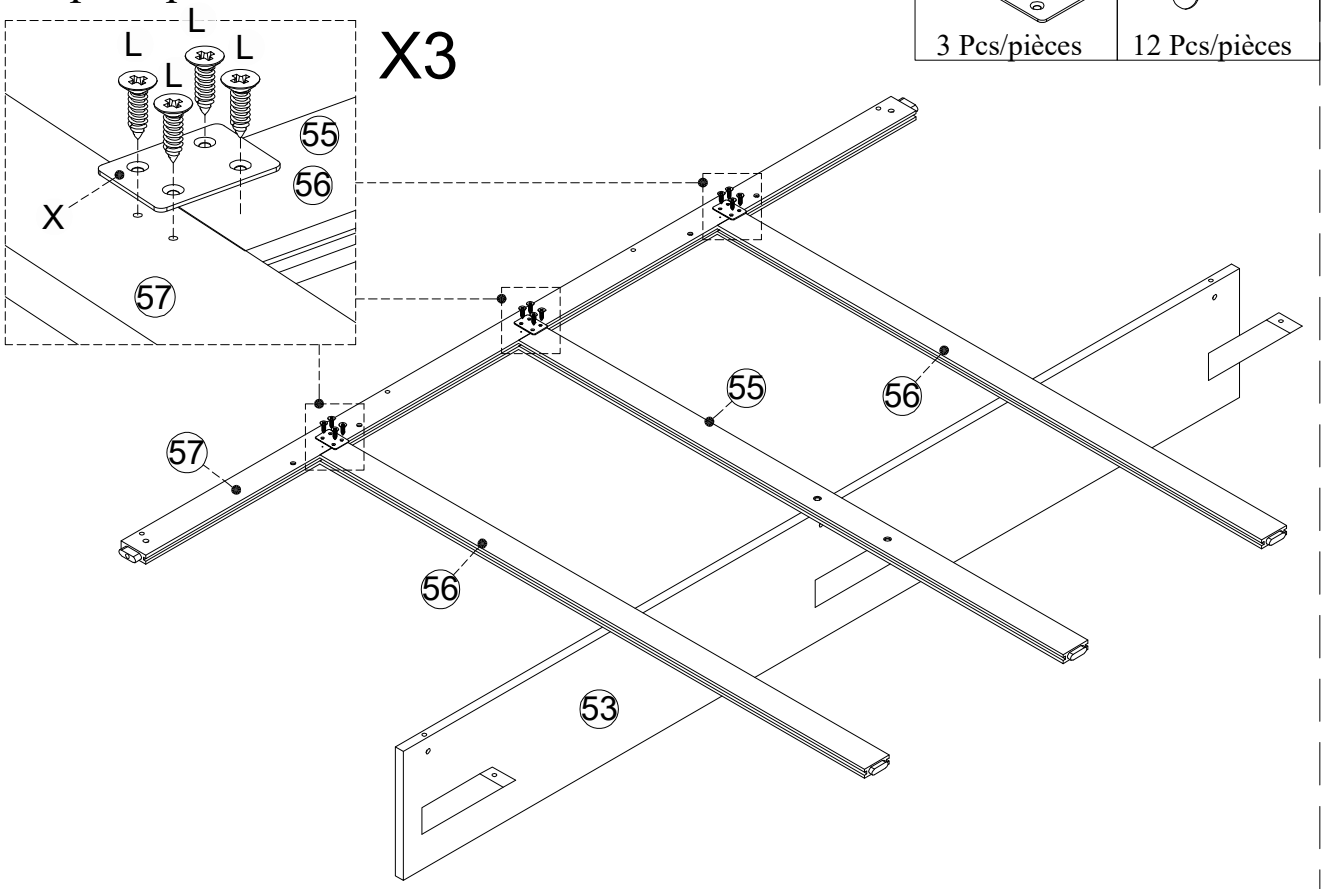

Step/Étape 50

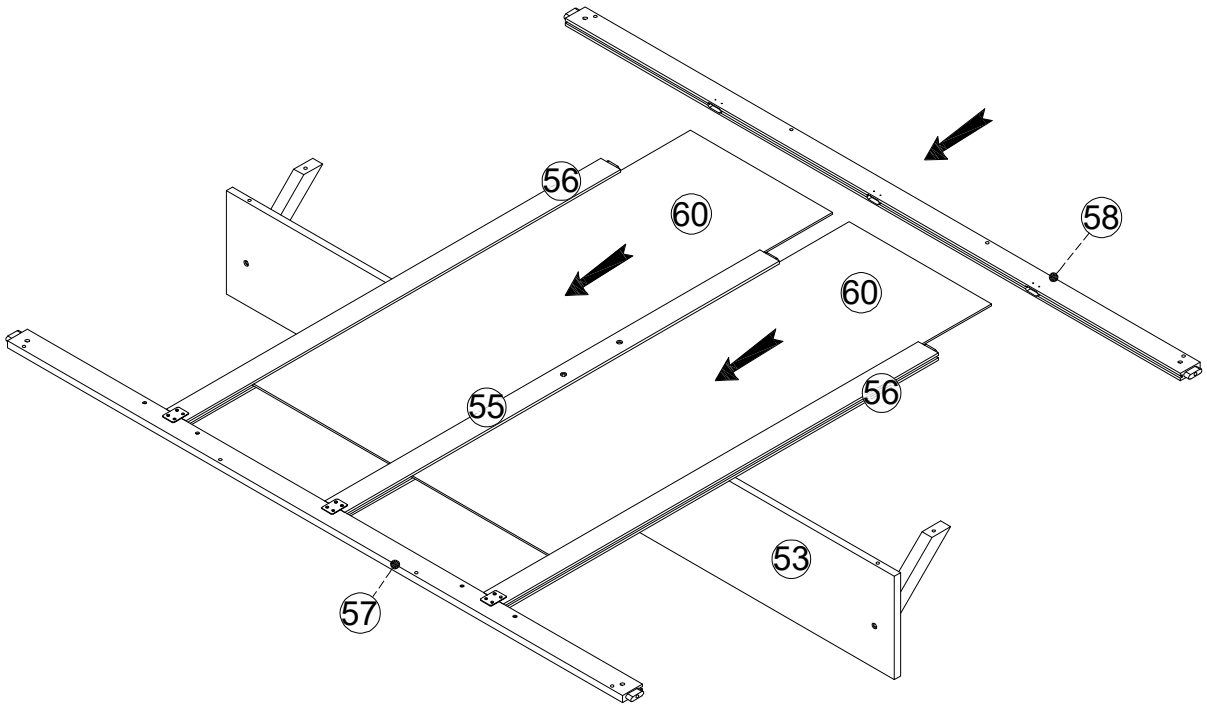

Step/Étape 51

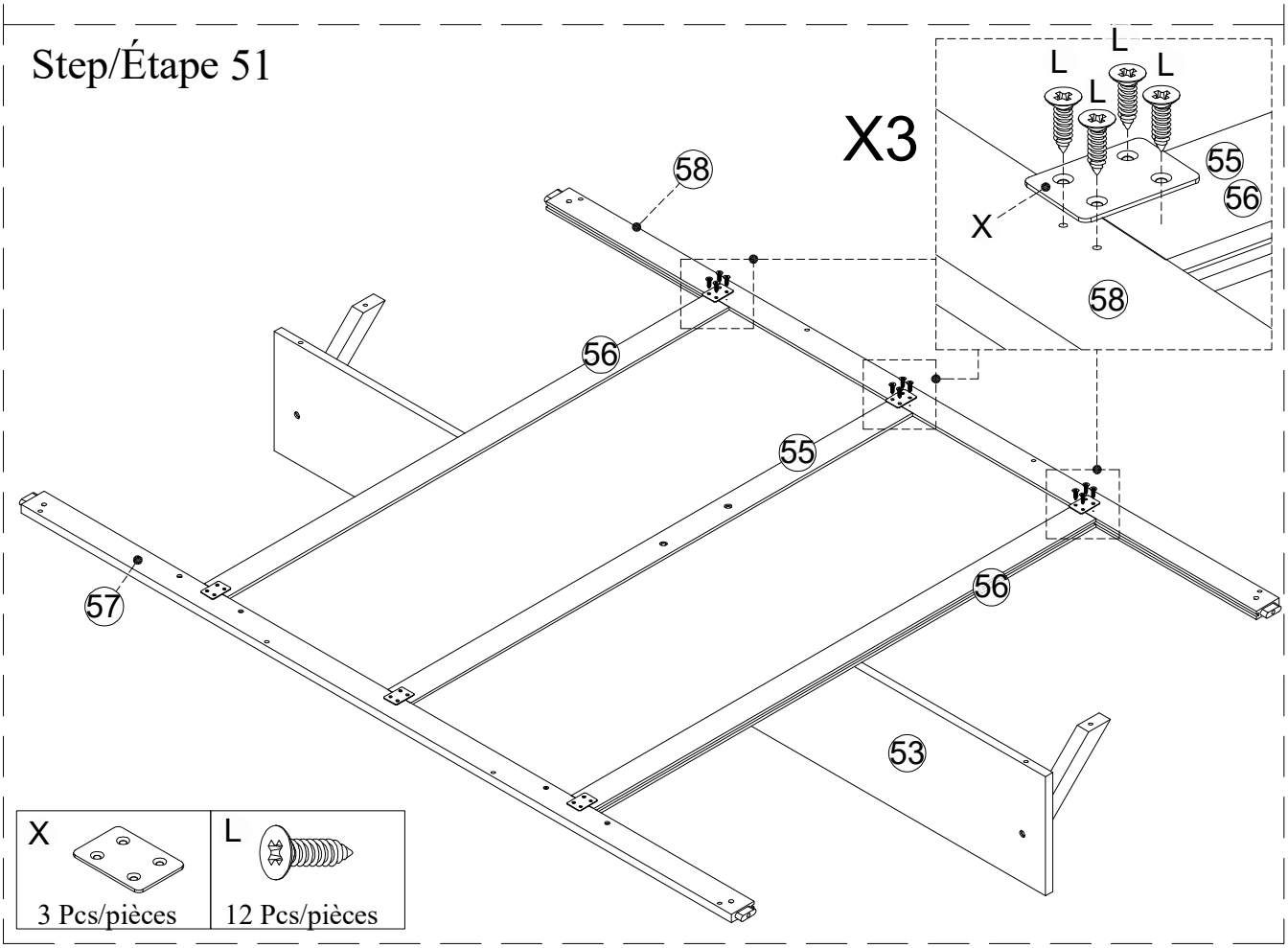

Step/Étape 52

C	A1
1 Pcs/pièces	4 Pcs/pièces
B	
4 Pcs/pièces	

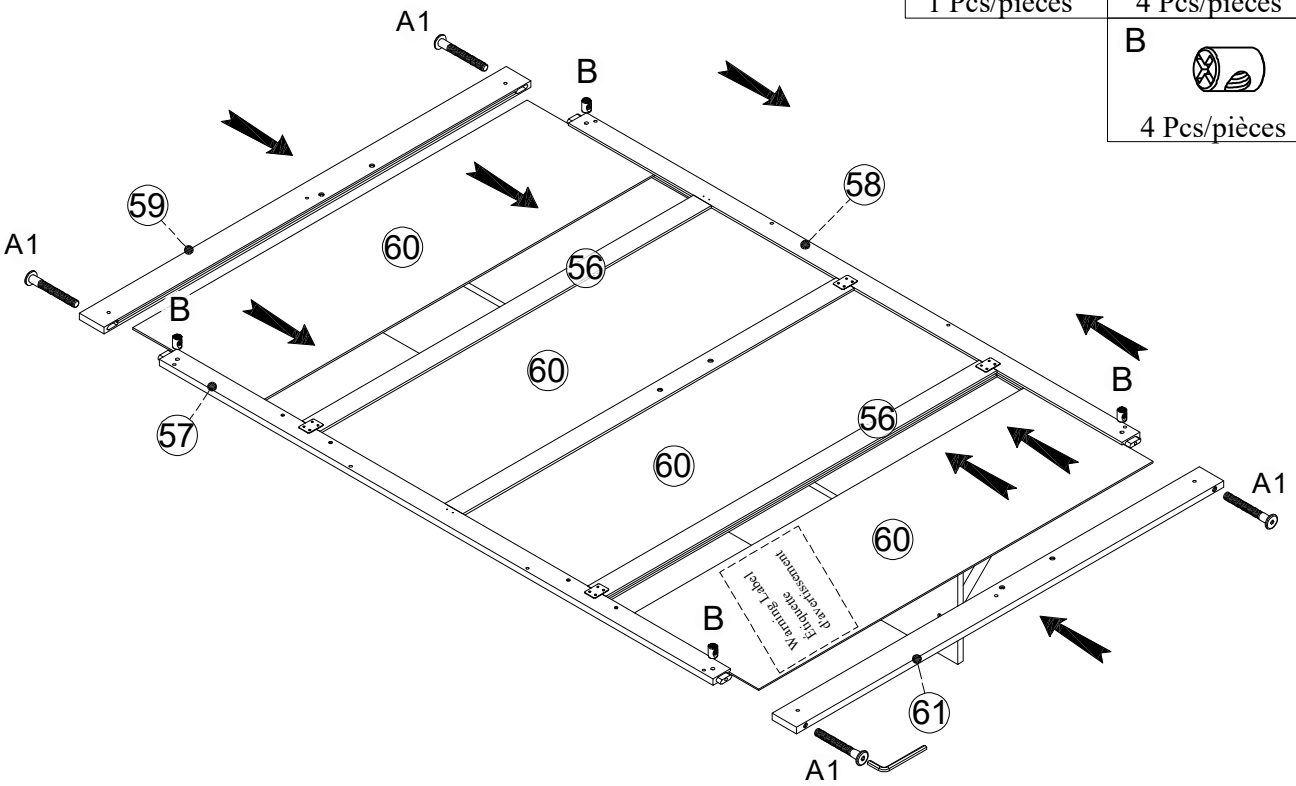

Step/Étape 53

C	T	S
2 Pcs/pièces	1 Pcs/pièces	1 Pcs/pièces
B	F	
1 Pcs/pièces	1 Pcs/pièces	

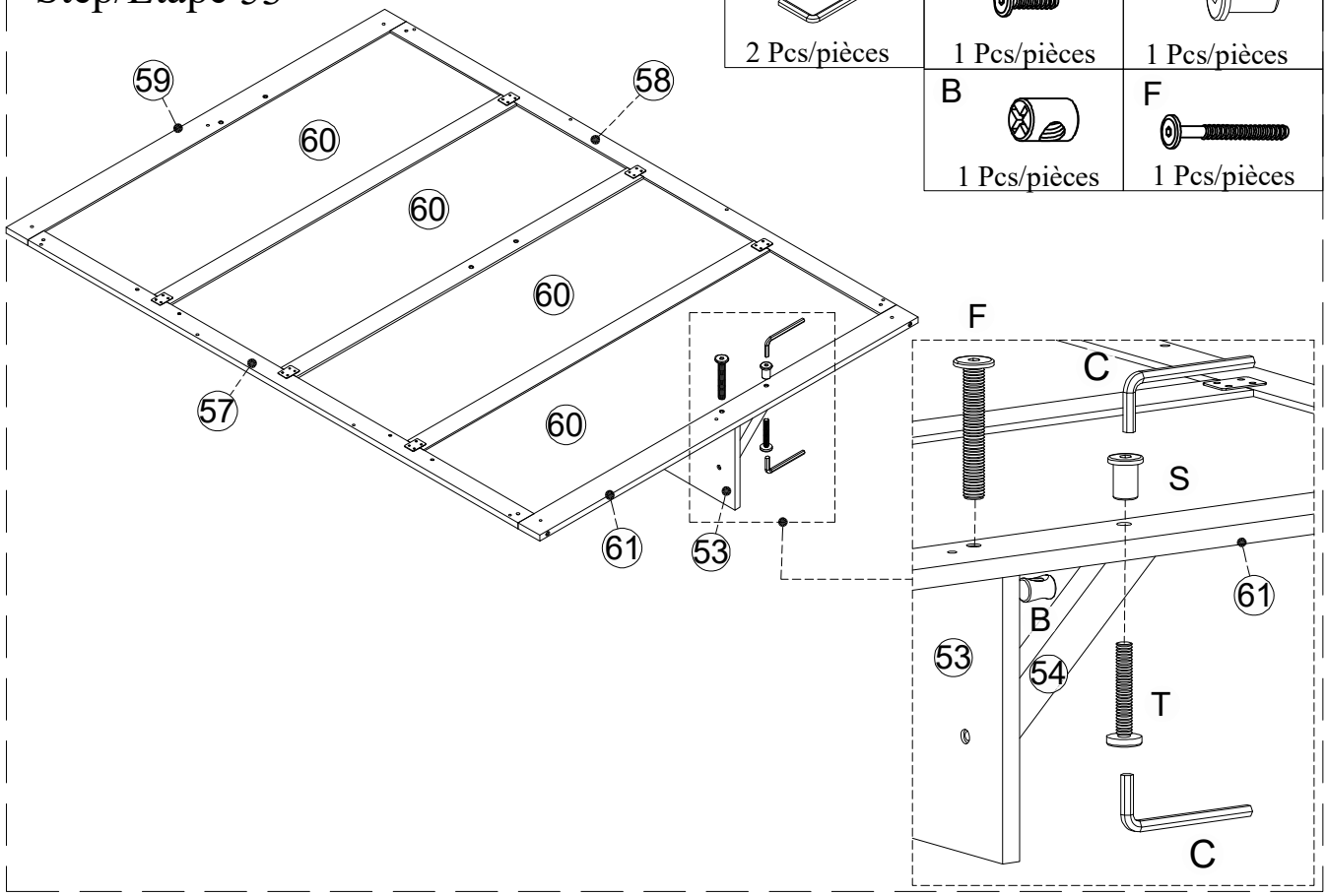

Step/Étape 54

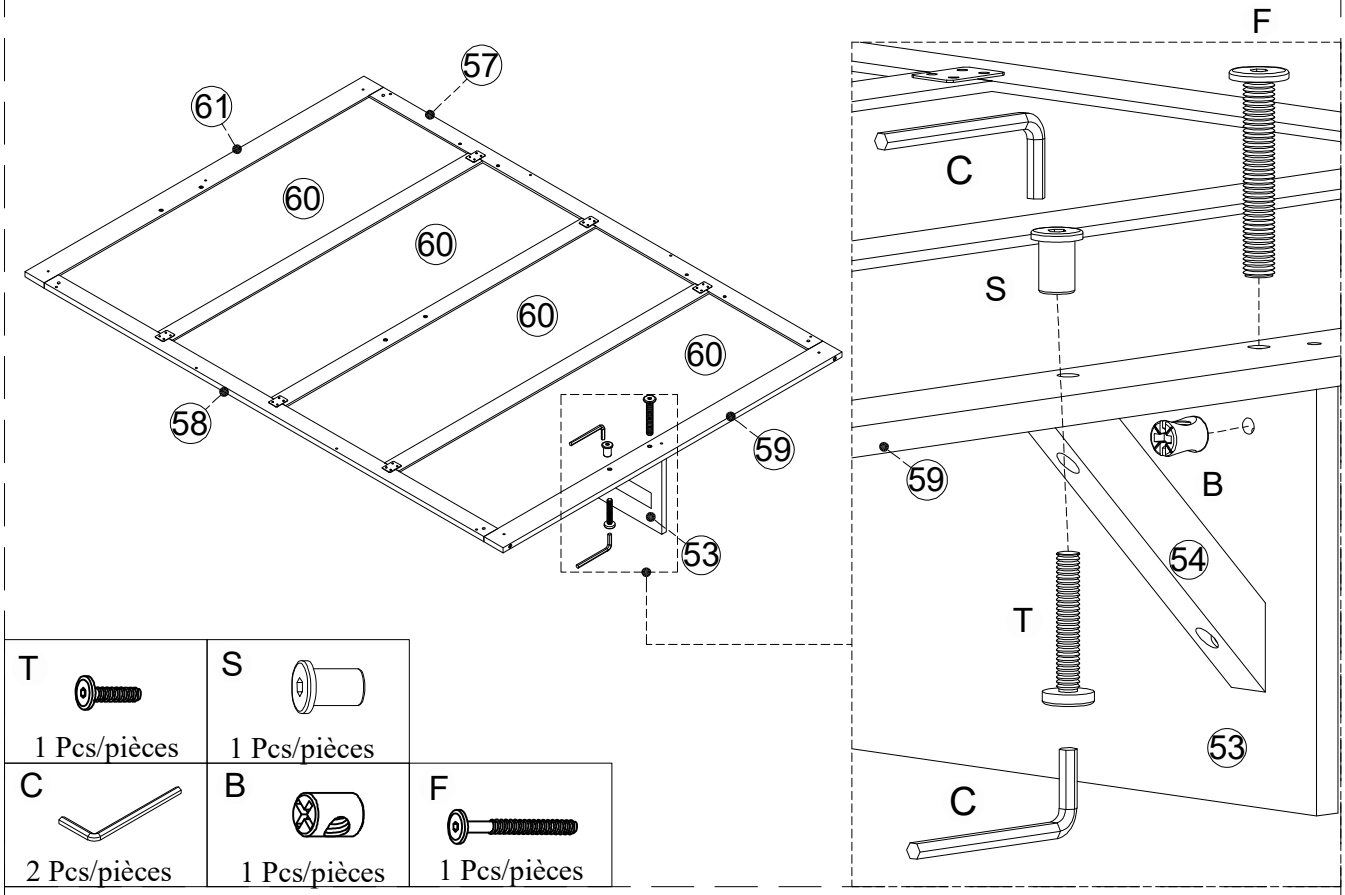

T 1 Pcs/pièces	S 1 Pcs/pièces	
C 2 Pcs/pièces	B 1 Pcs/pièces	F 1 Pcs/pièces

Step/Étape 55

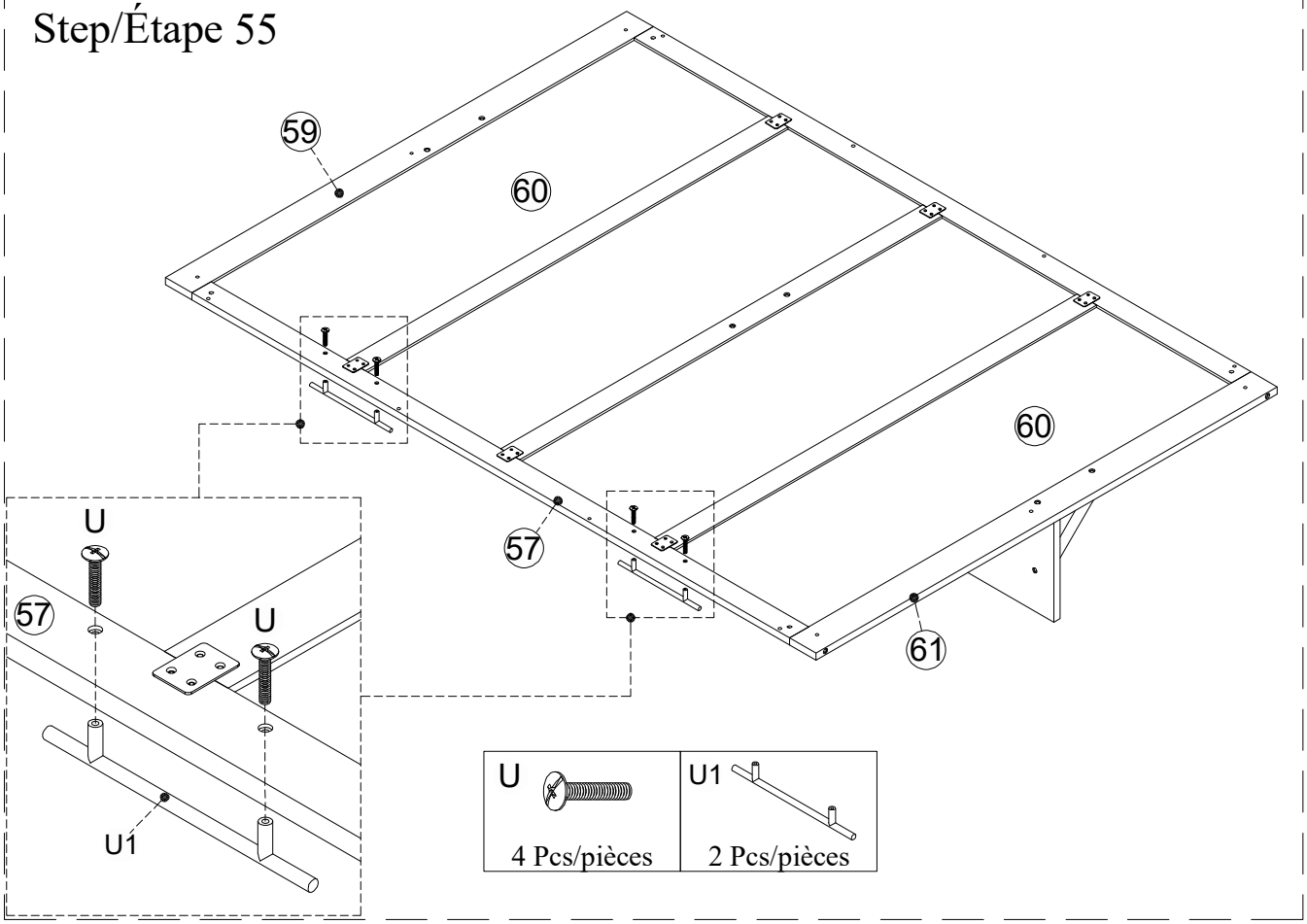

U 4 Pcs/pièces	U1 2 Pcs/pièces

Step/Étape 56

B	C	F	E
4 Pcs/pièces	1 Pc/pièce	4 Pcs/pièces	8 Pcs/pièces

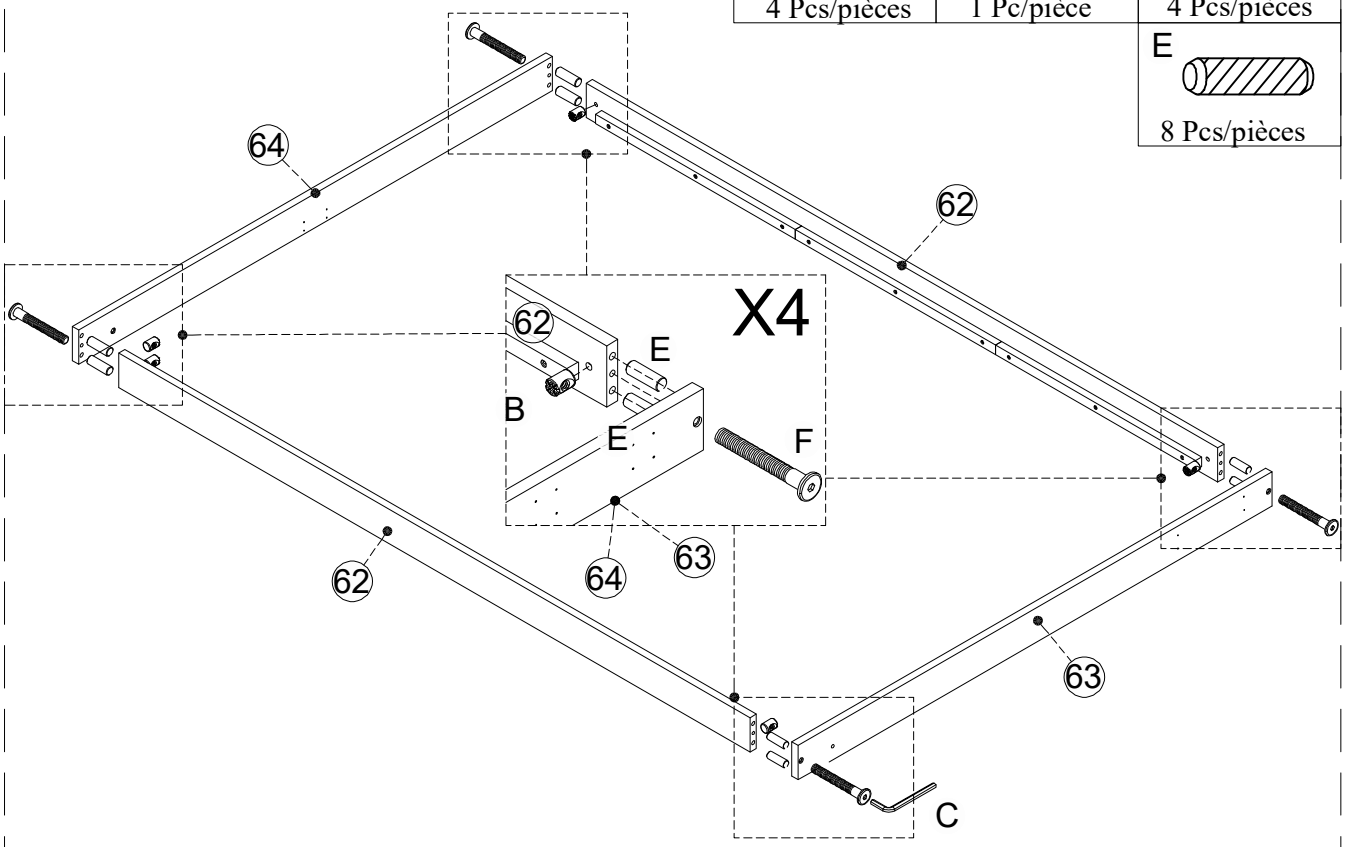

Step/Étape 57

L	P
8 Pcs/pièces	2 Pcs/pièces

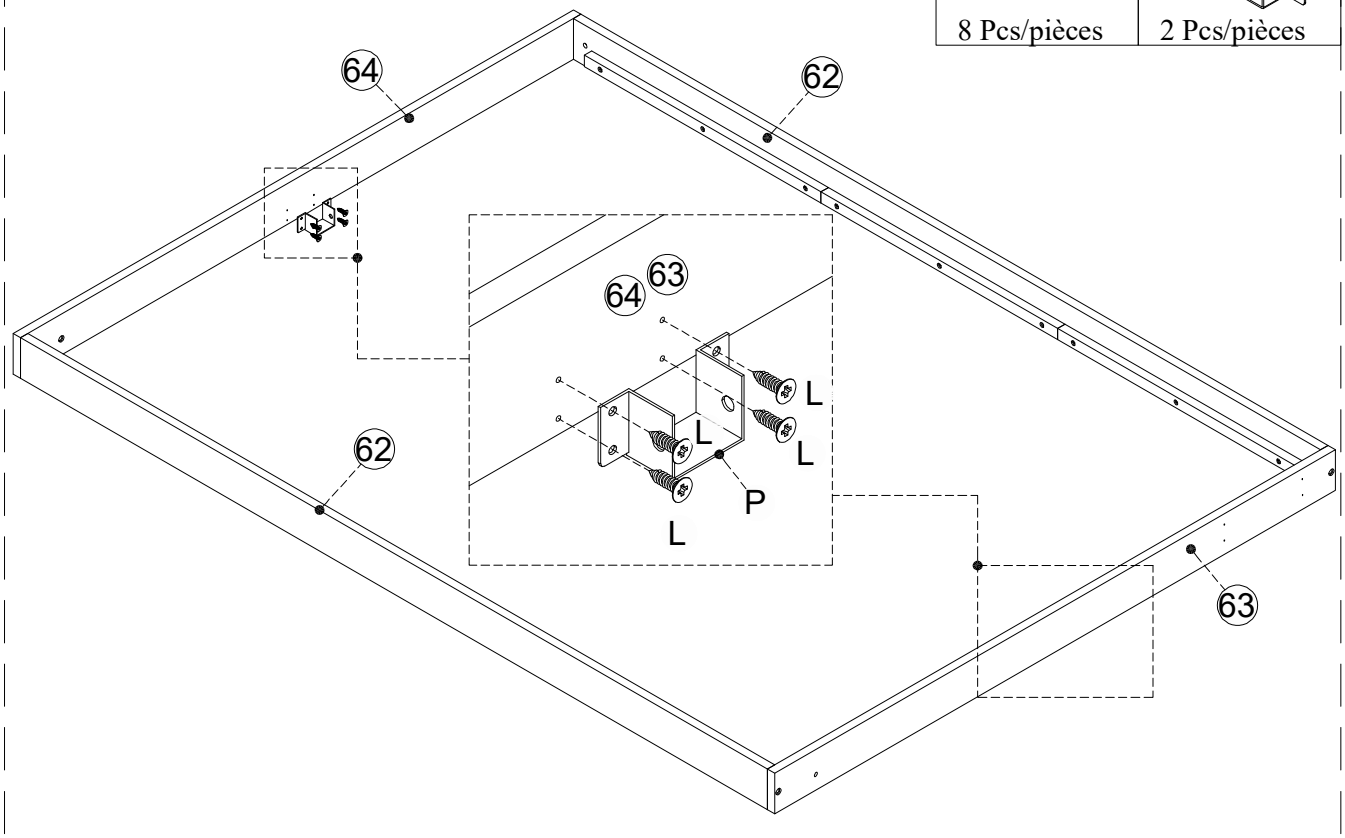

Step/Étape 58

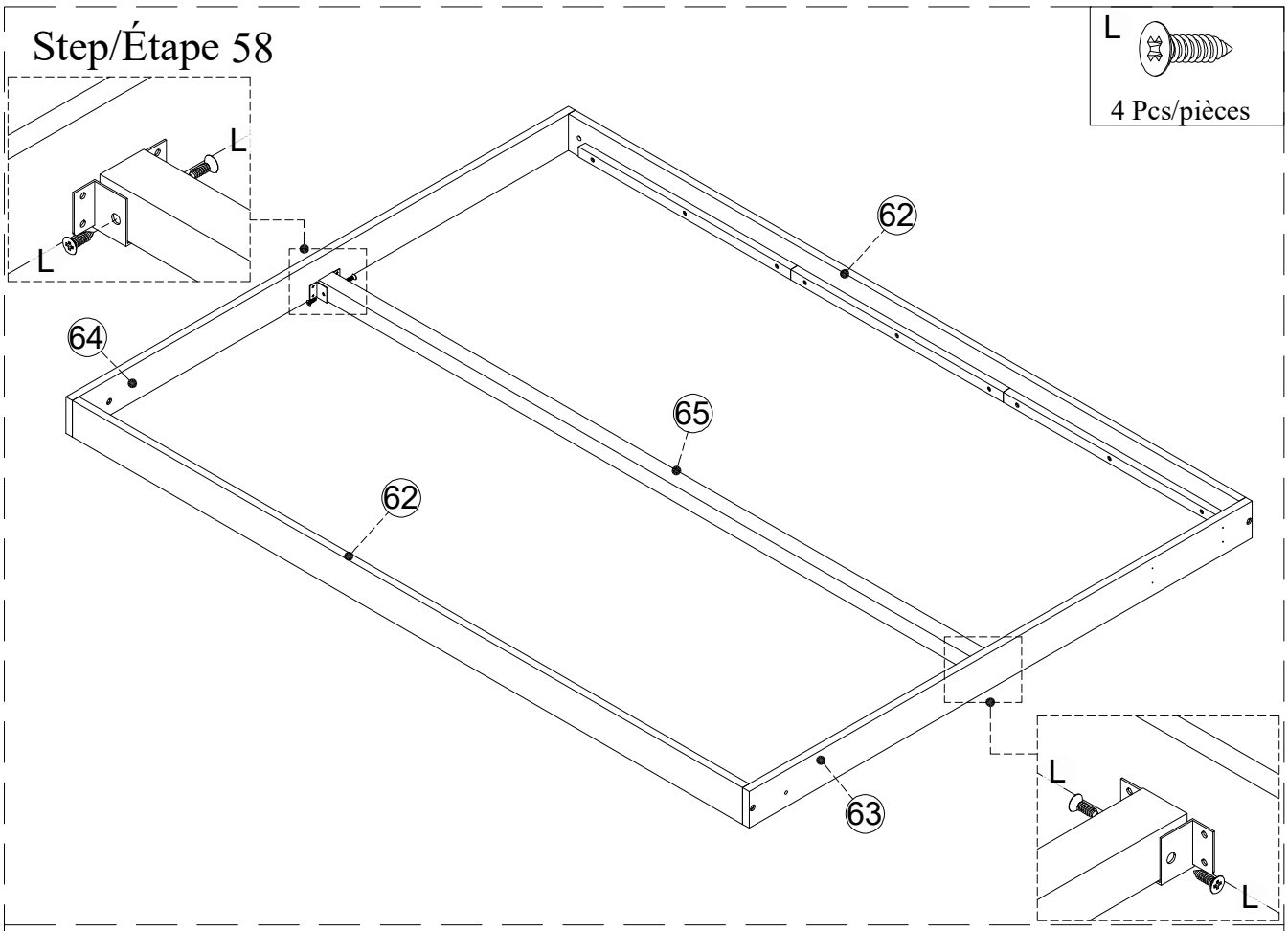

Step/Étape 59

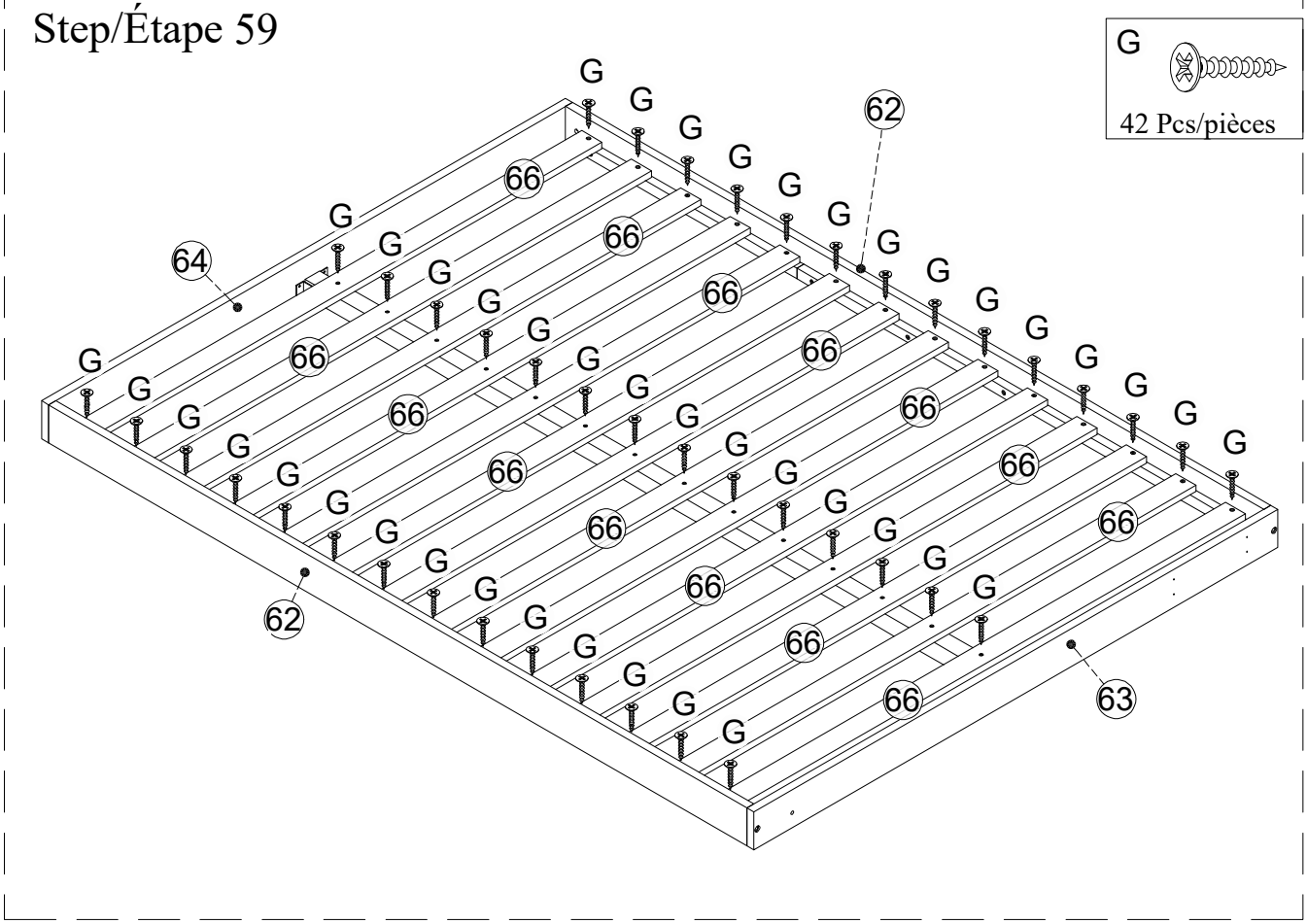

Step/Étape 60

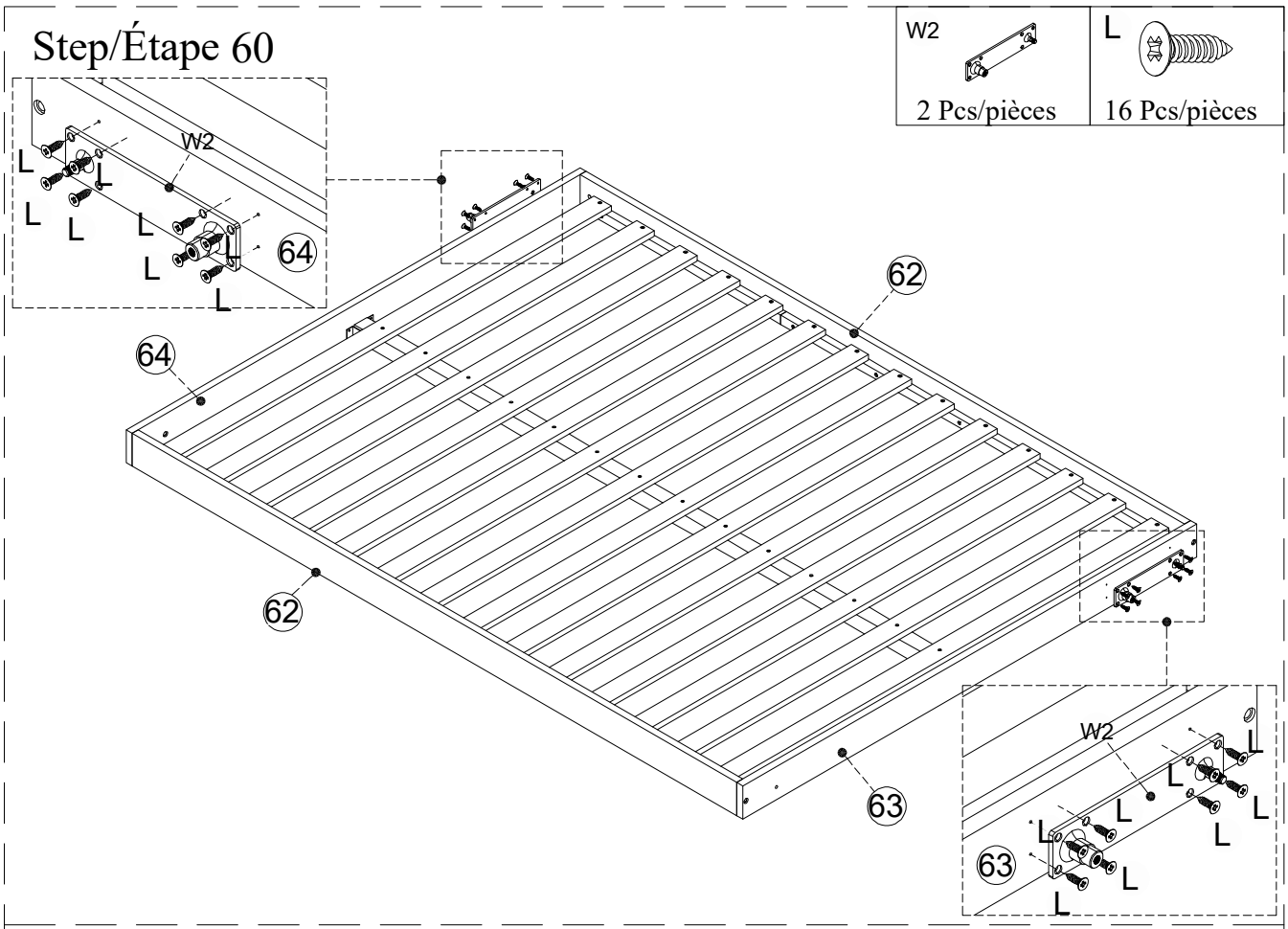

Step/Étape 61

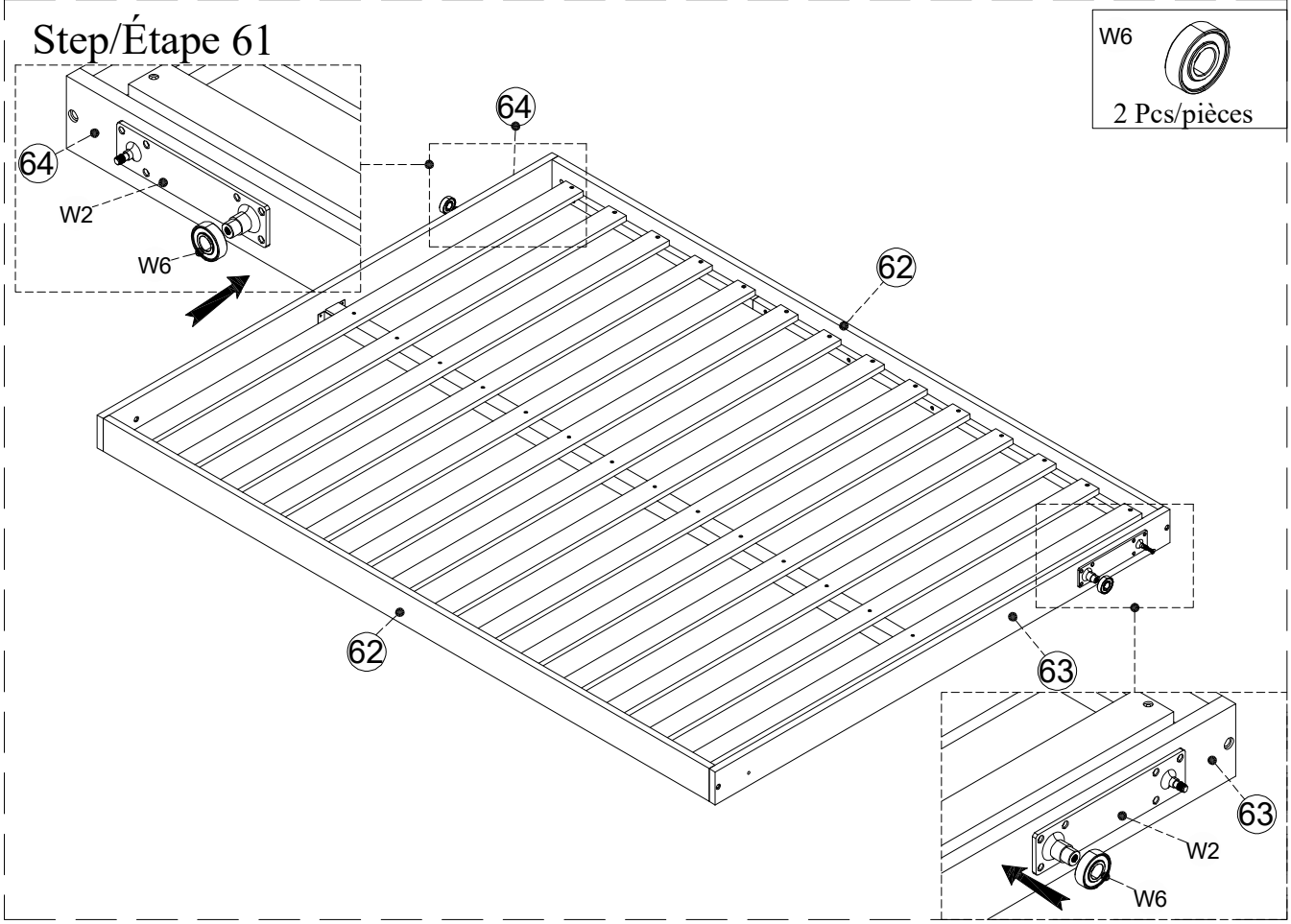

Step/Étape 62

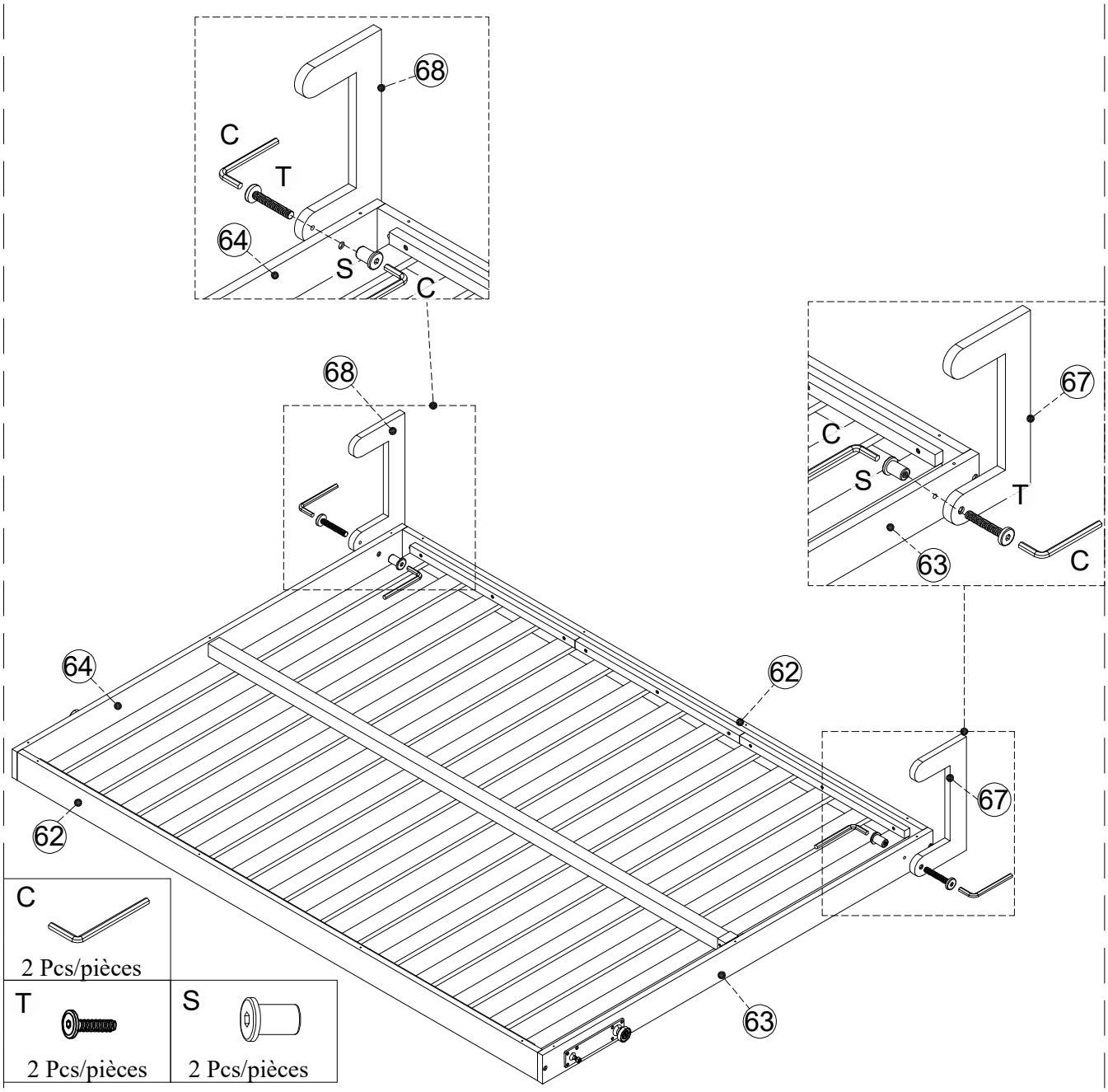

Step/Étape 63

K

14 Pcs/pièces

K K K

Step/Étape 65

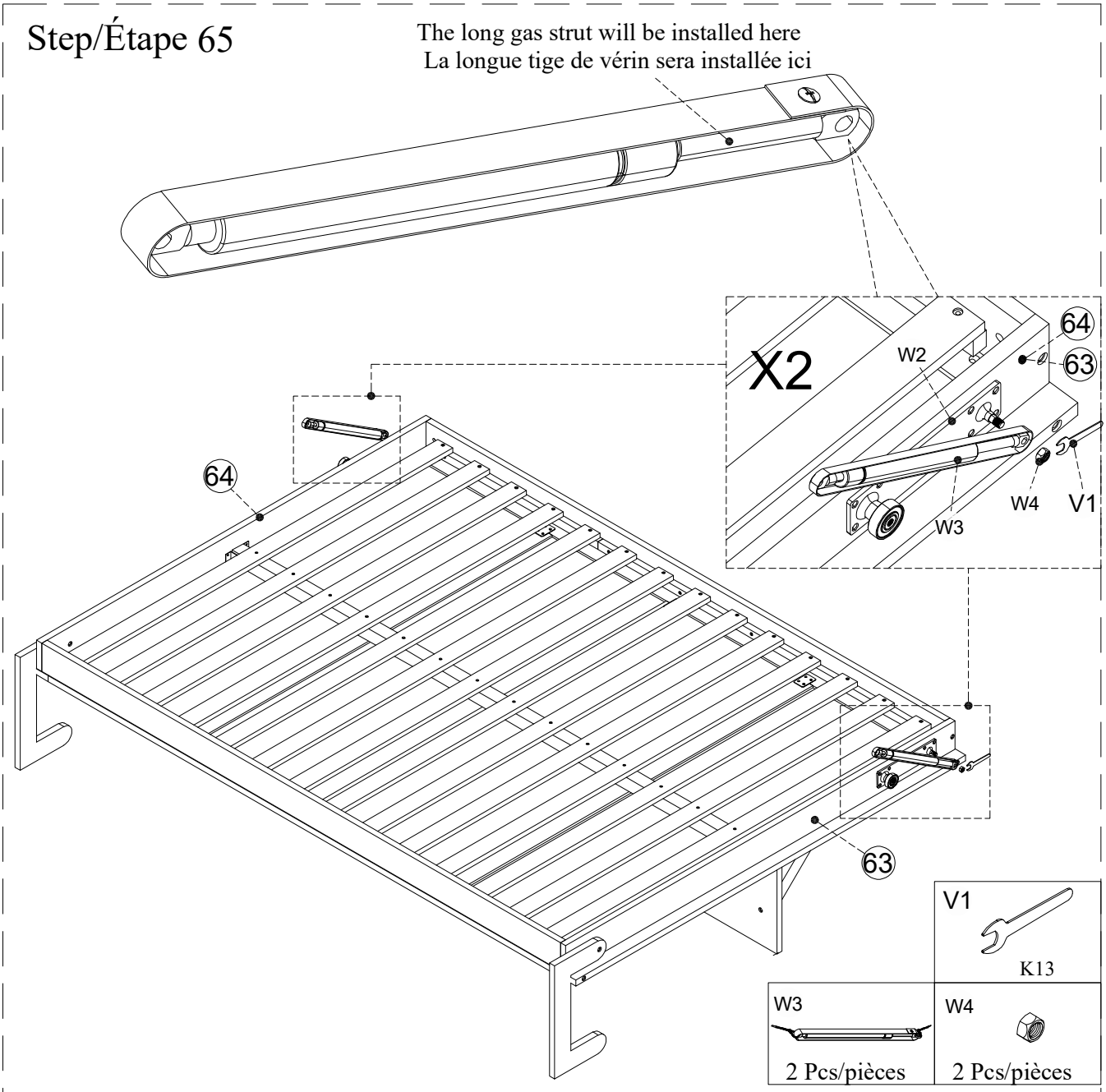

Step/Étape 66

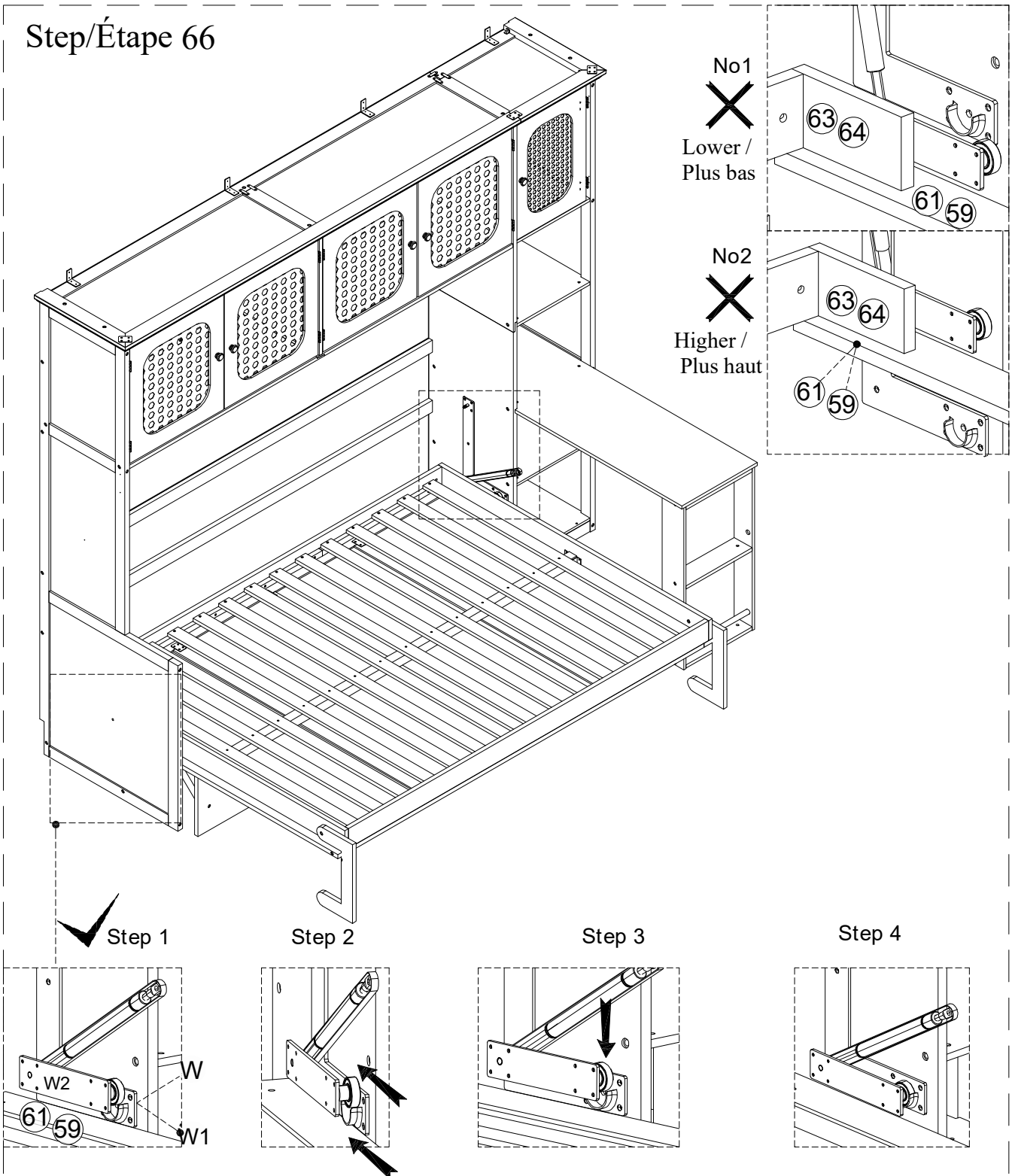

Step 1 Slide the bed unit into the frame / Faites glisser le lit dans le cadre

Step 2 The roller housing of (W and W1) must be positioned between the roller of (W2) and the front vertical bar of the bed assembly(59,61) / Le logement du rouleau de (W et W1) doit être placé entre le rouleau de (W2) et le montant vertical avant du lit (59,61)

Step 3 Slide in slowly from both sides, align until the roller of (W2) is directly above the housing (W, W1), then lower the bed assembly gently, keeping both sides aligned / Faites glisser lentement des deux côtés, alignez jusqu'à ce que le rouleau de (W2) soit directement au-dessus du logement (W, W1), puis abaissez doucement l'ensemble du lit en gardant les deux côtés alignés

Important note / Remarque importante :Do not insert the bed unit into the frame as shown in illustrations No1 and No2 / Ne pas insérer le module lit dans la structure comme indiqué sur les illustrations No1 et No2

Step/Étape 67

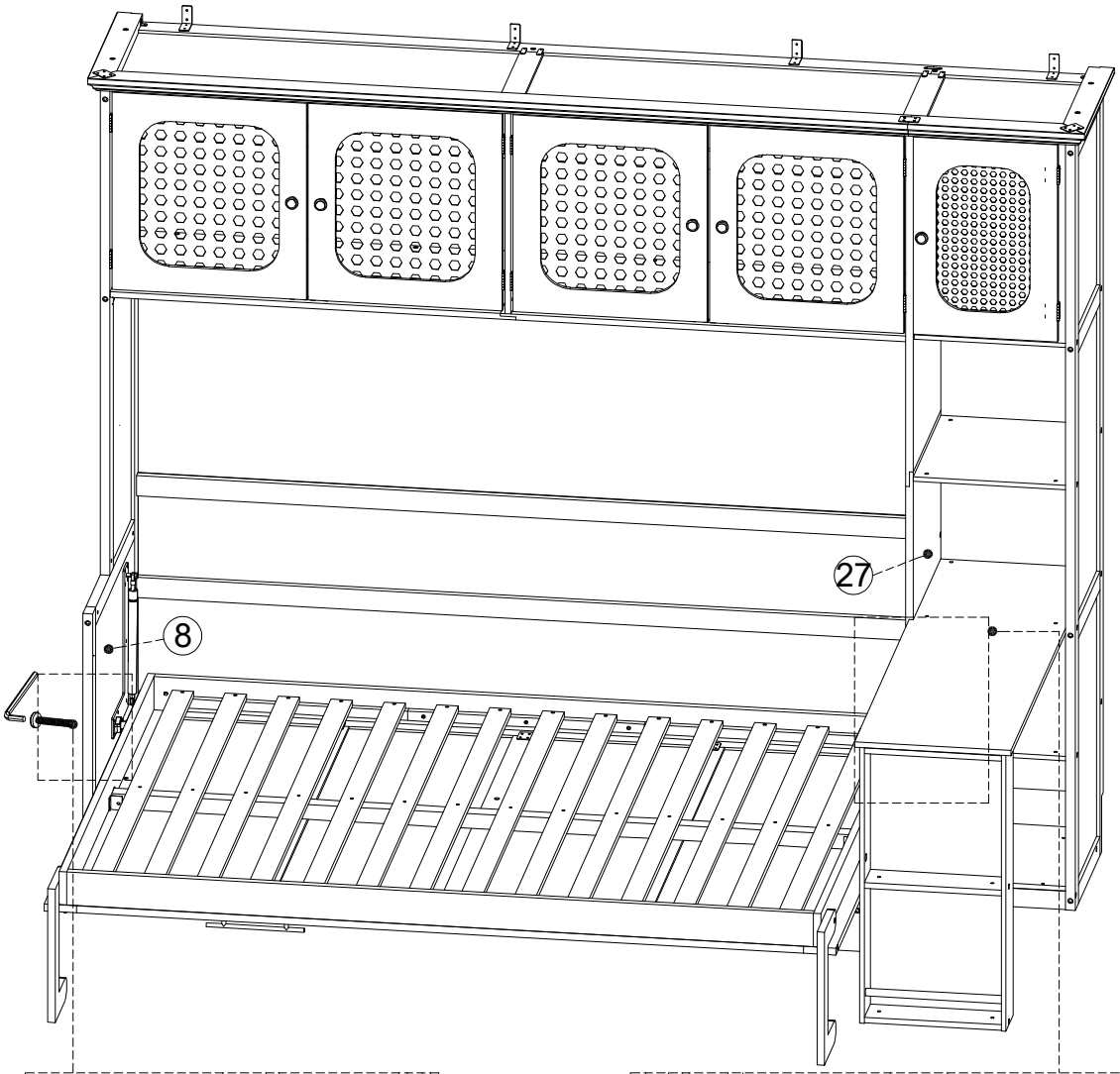

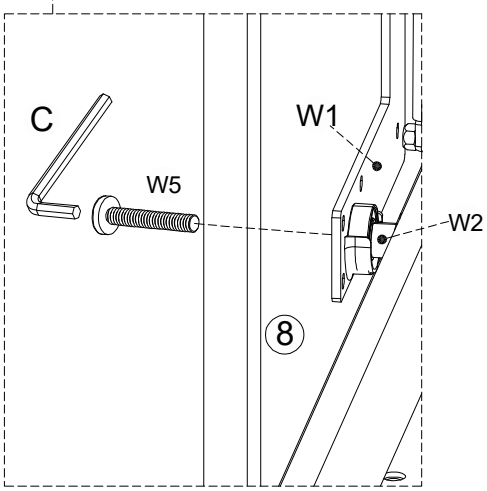

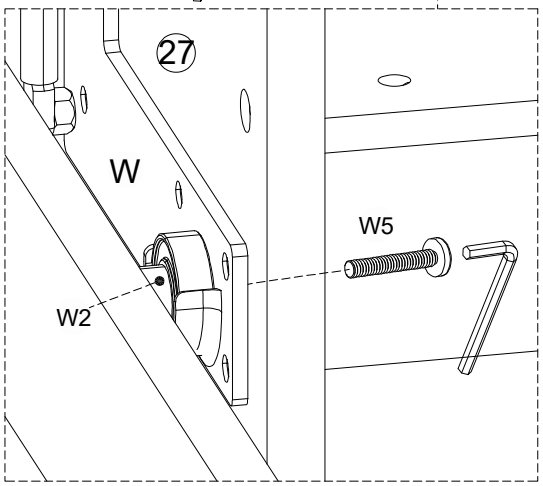

W5	C
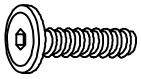	
2 Pcs/pièces	1 Pc/pièce

Step/Étape 68

Step 1

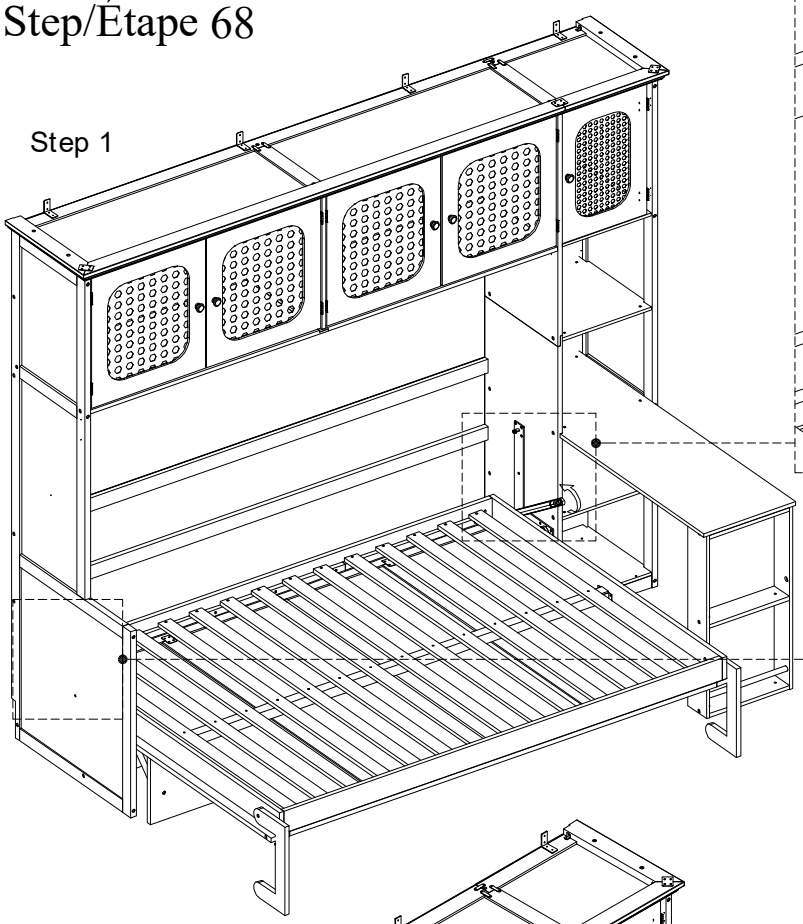

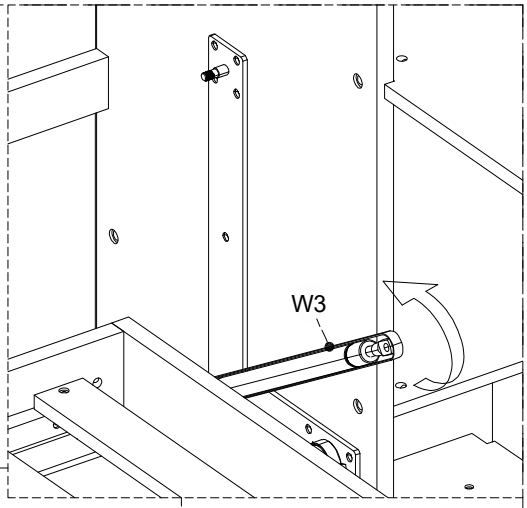

Left and right

W4	V1
2 Pcs/pièces	K13

Step 2

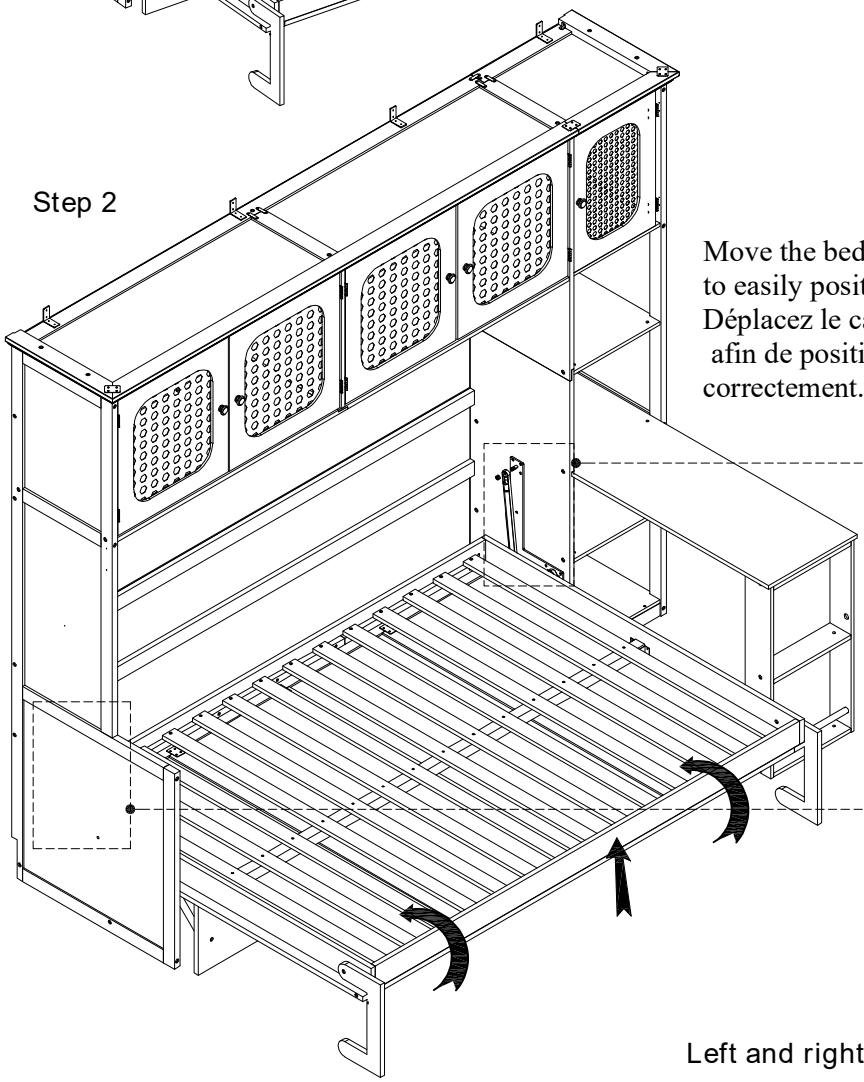

Move the bed frame in the direction of the arrow to easily position W3 correctly.
Déplacez le cadre du lit dans le sens de la flèche afin de positionner facilement la pièce W3 correctement.

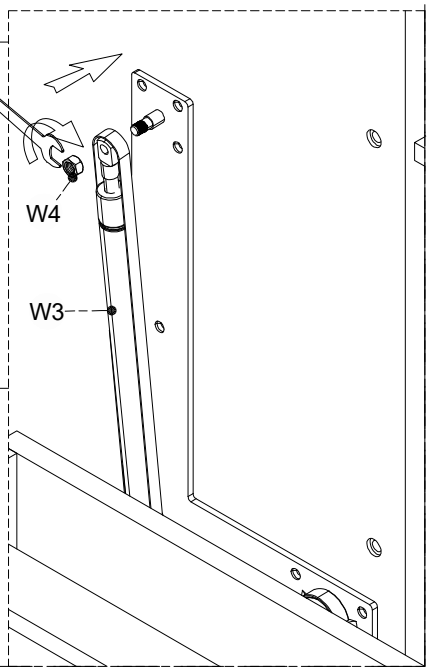

Left and right

Step/Étape 69

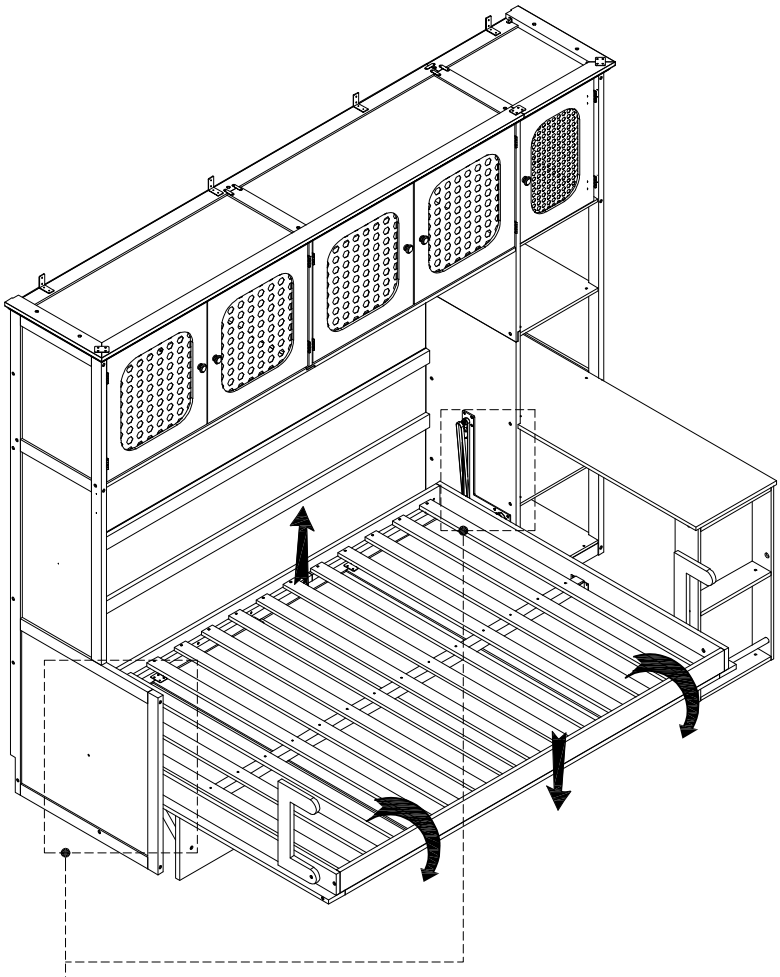

Left and right
Step 1

Left and right
Step 2

Left and right
Step 3

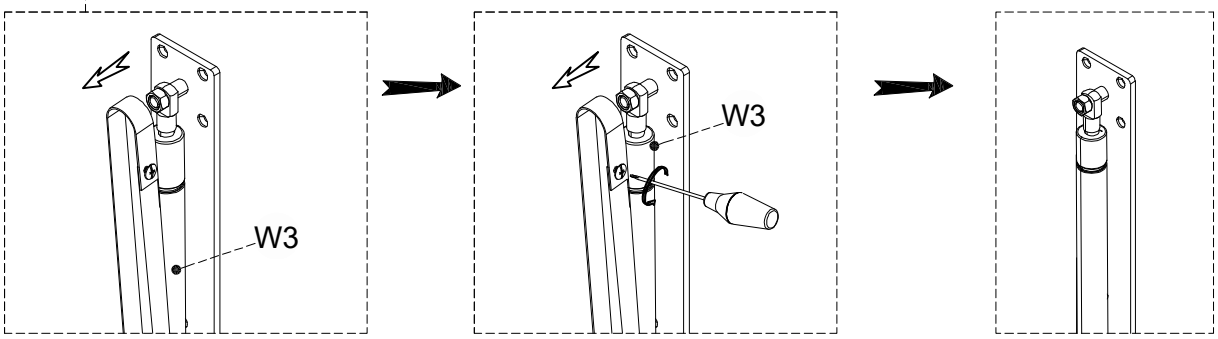

Completed/Complété

Move the bed frame in the direction of the arrow, pull the straps to the side, then use a screwdriver to open and remove the straps.

Déplacez le cadre de lit dans le sens de la flèche, tirez les sangles sur le côté, puis utilisez un tournevis pour ouvrir et retirer les sangles.

Step/Étape 70

L	N1
4 Pcs/pièces	2 Pcs/pièces

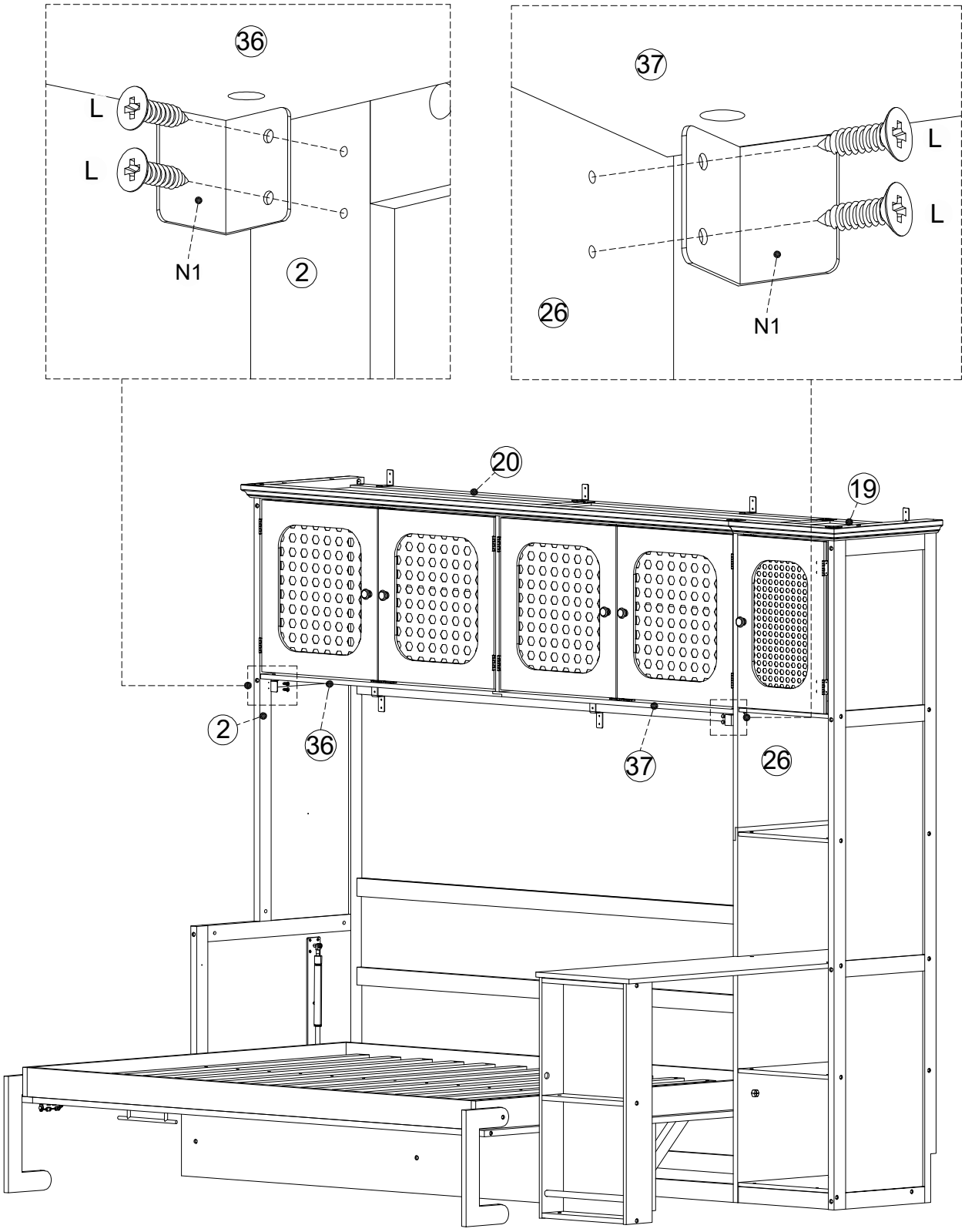

Step/Étape 71

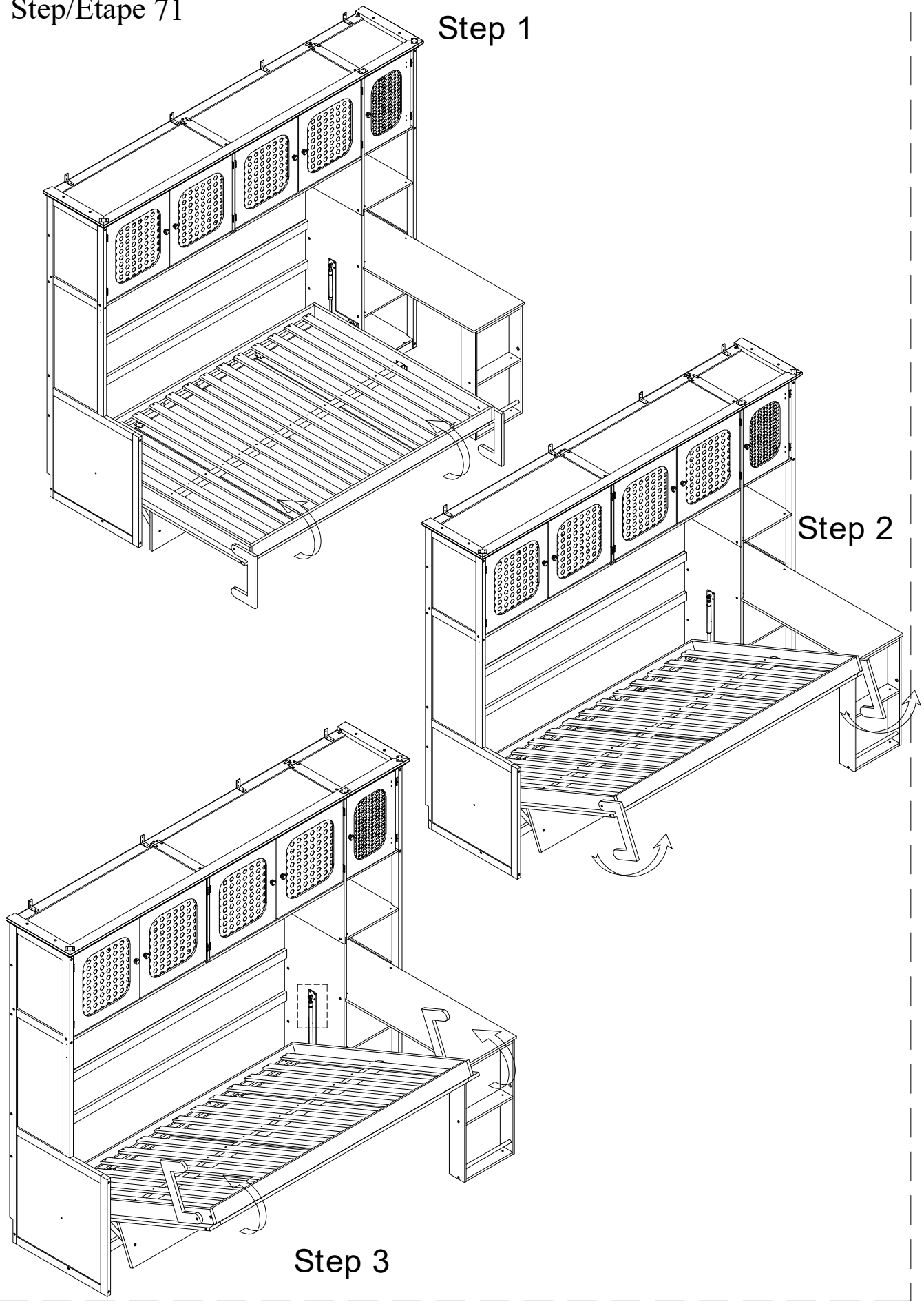

Step/Étape 72

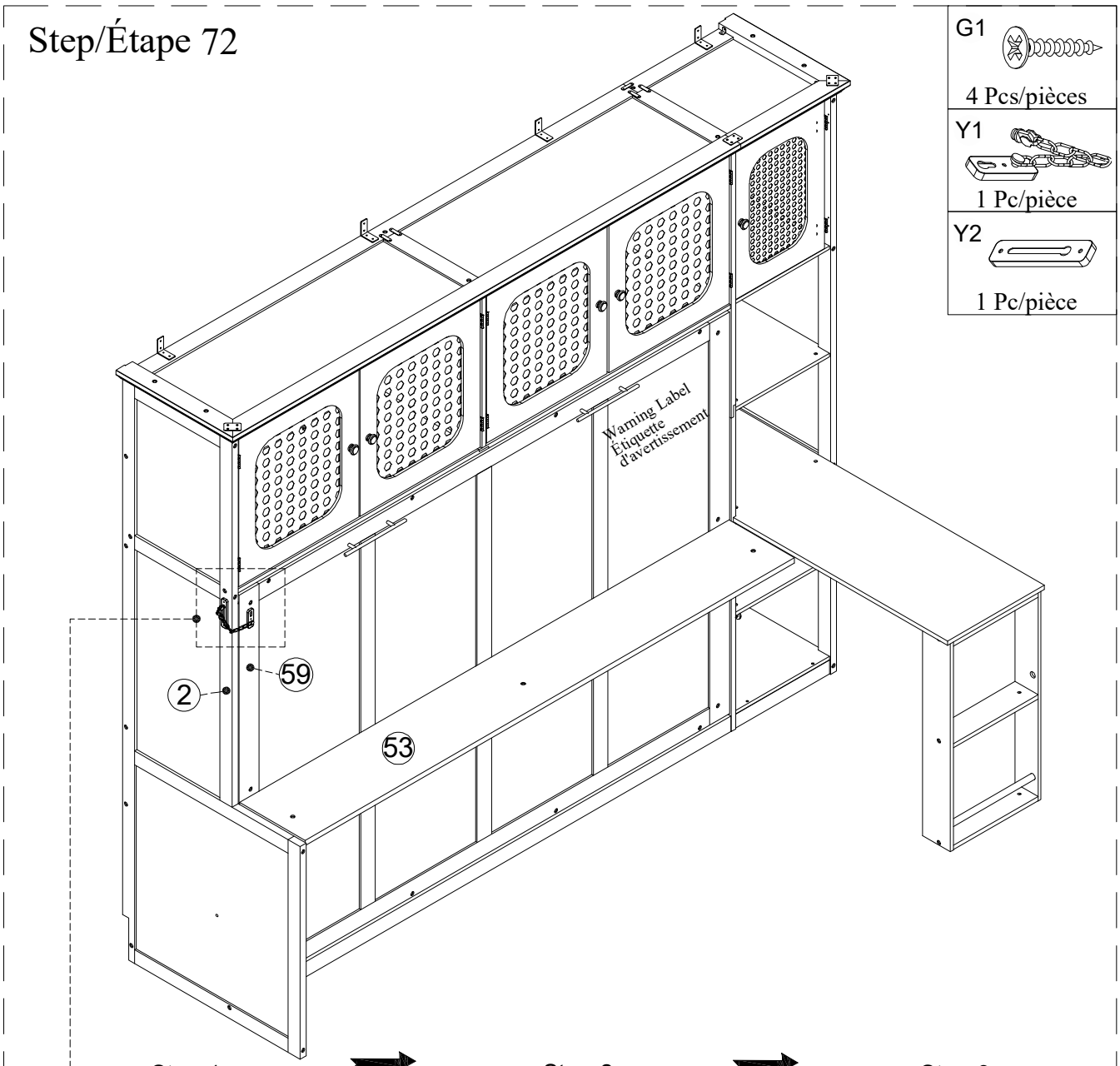

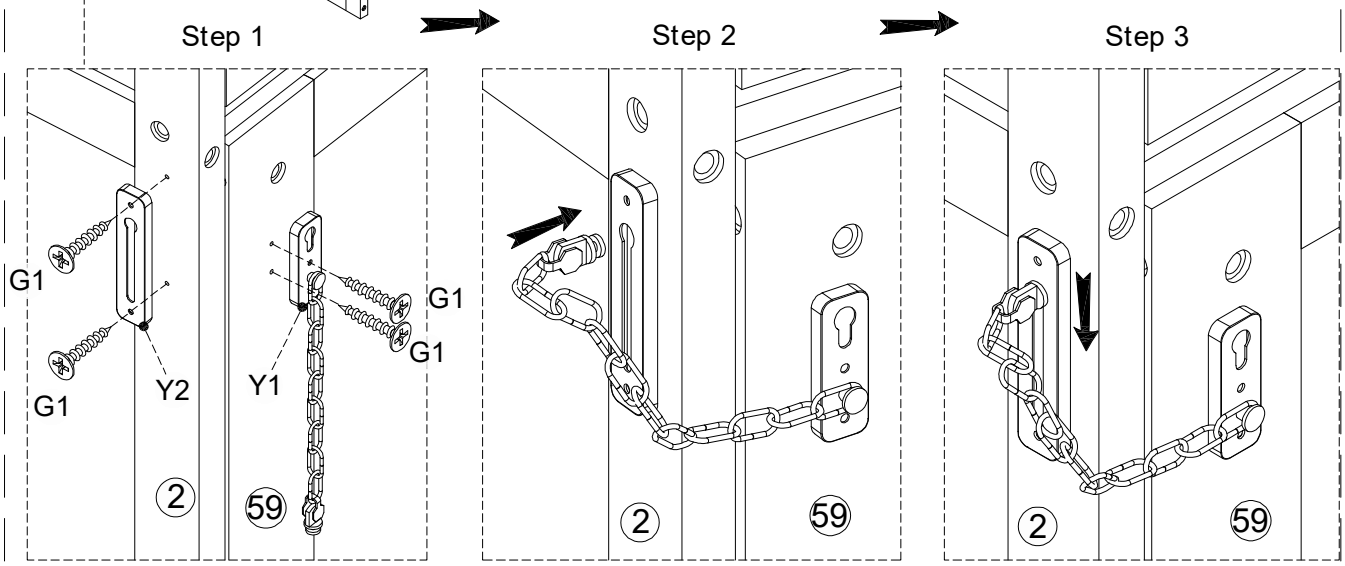

Lock / Verrouiller

Step/Étape 73

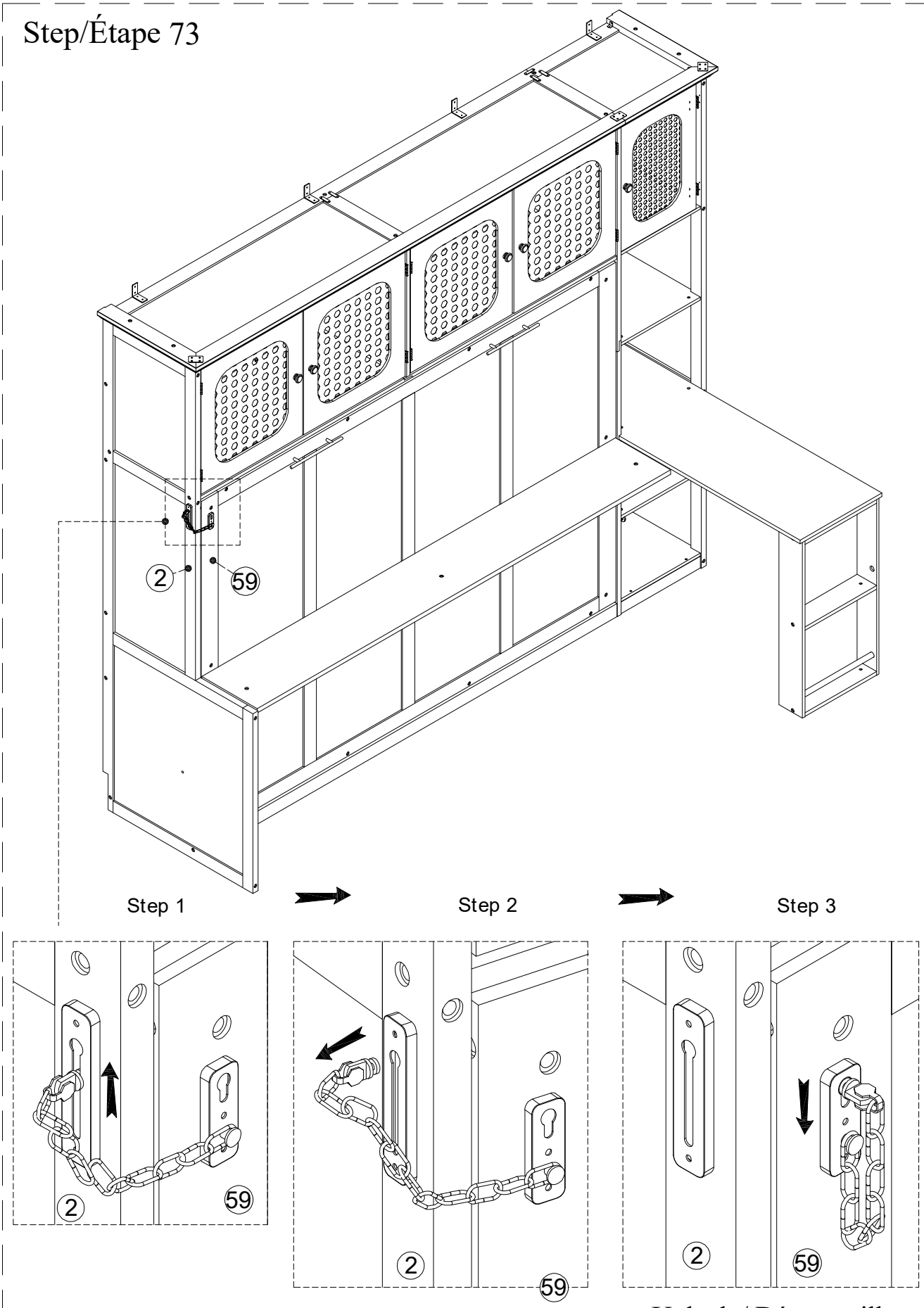

Unlock / Déverrouiller

Step/Étape 74

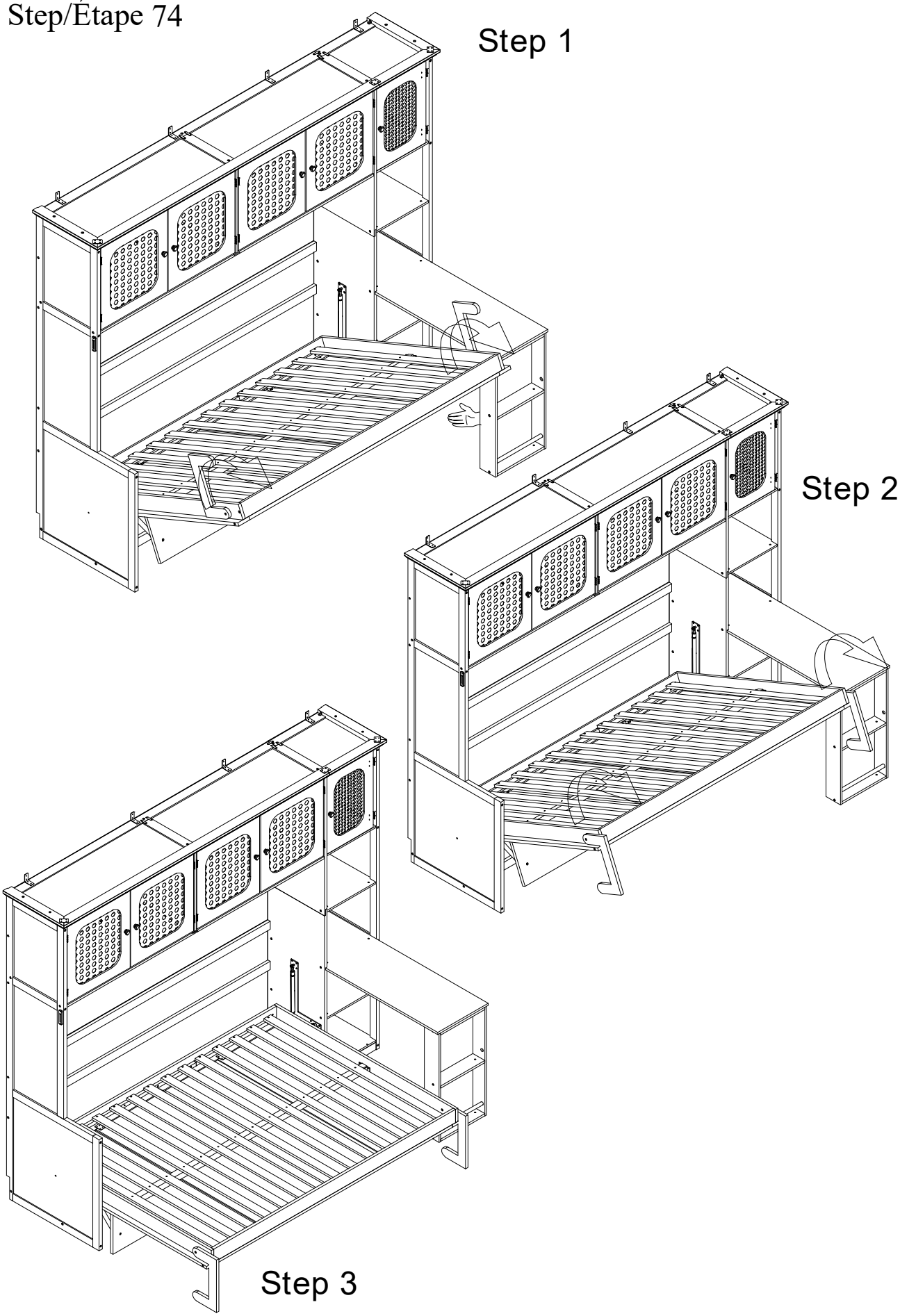
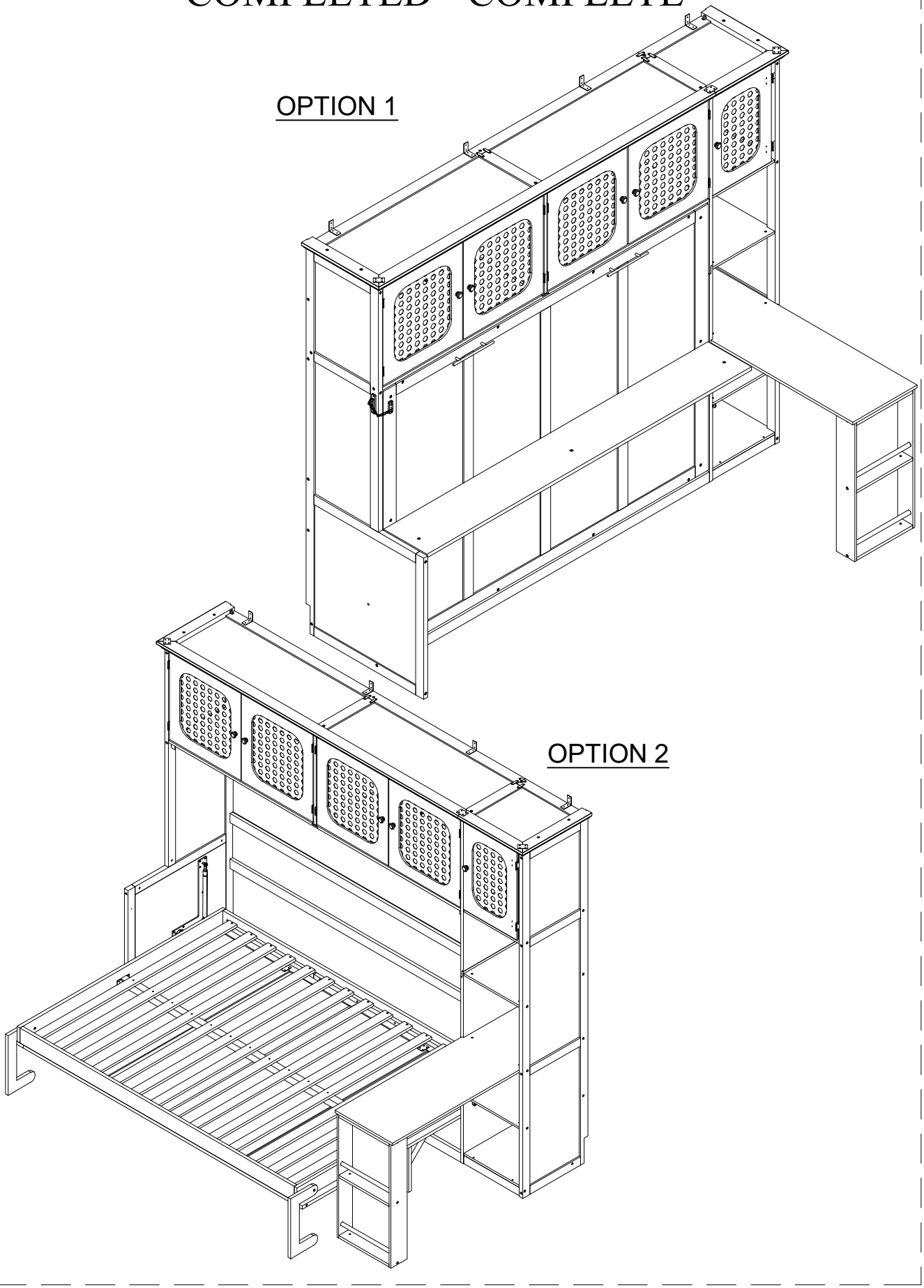
COMPLETED - COMPLÉTÉ