Produktanleitung(DE)
Noticed'emploi(FR)
Instructionmanual(EN)

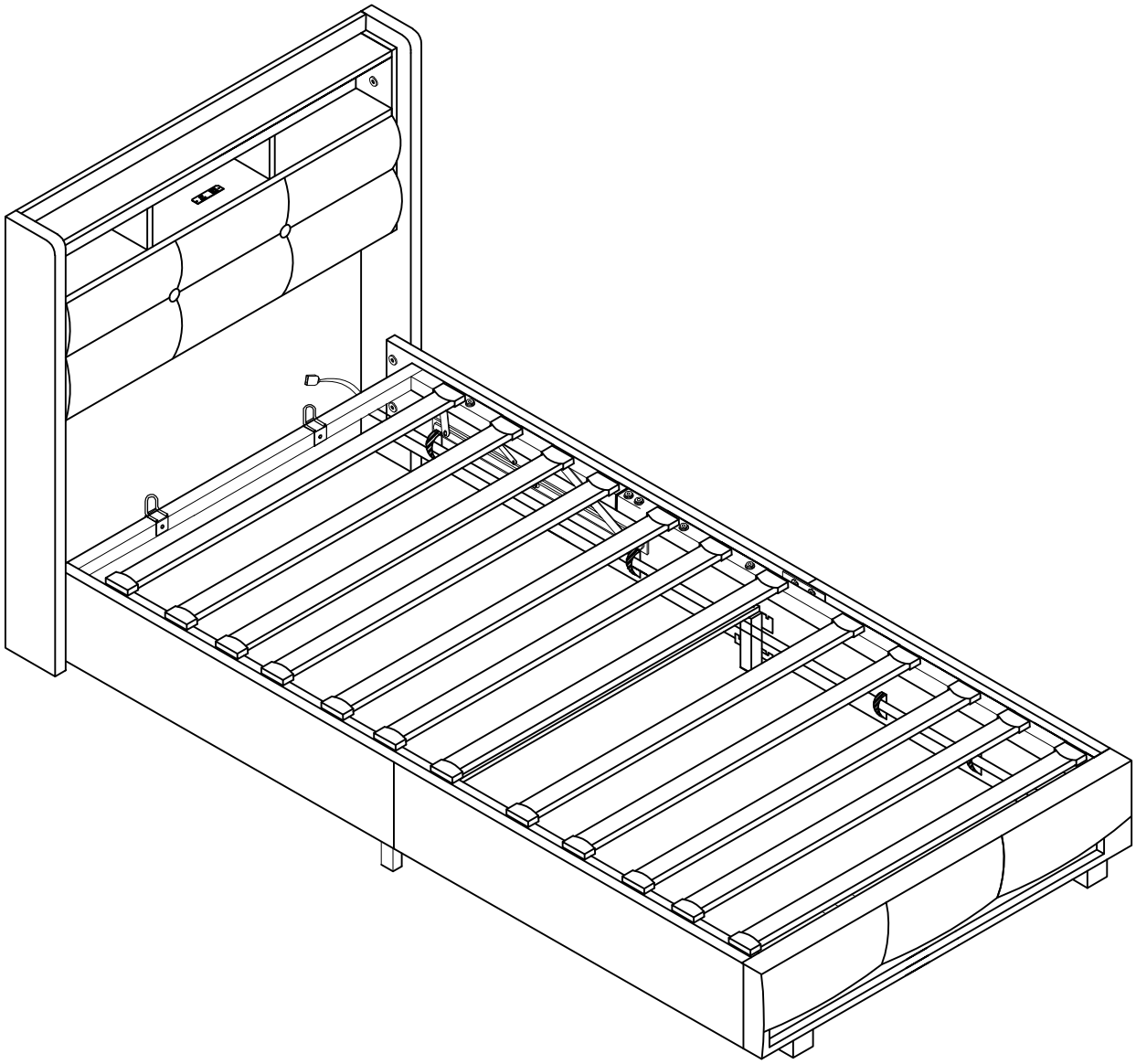

Stückliste(DE)/Liste des pièces(FR)/Part List(EN)

1: 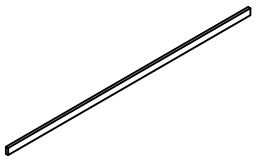 1PC	2: 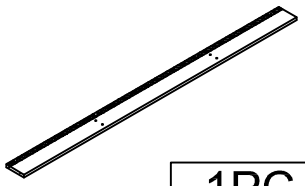 1PC	3: 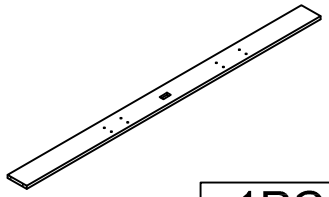 1PC	4: 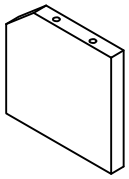 2PCS
5: 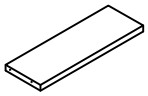 2PCS	6: L  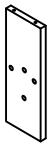 R 2PCS	7:  2PCS	8: 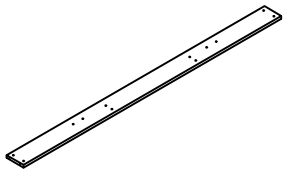 1PC
9: 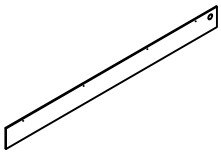 1PC	10: 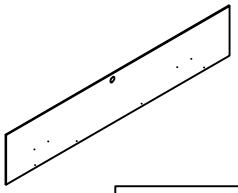 1PC	11: 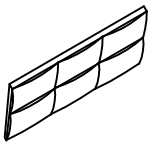 1PC	12: 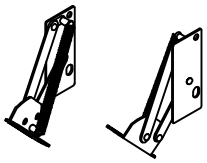 1SET	13:  1PC
14: 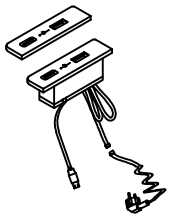			

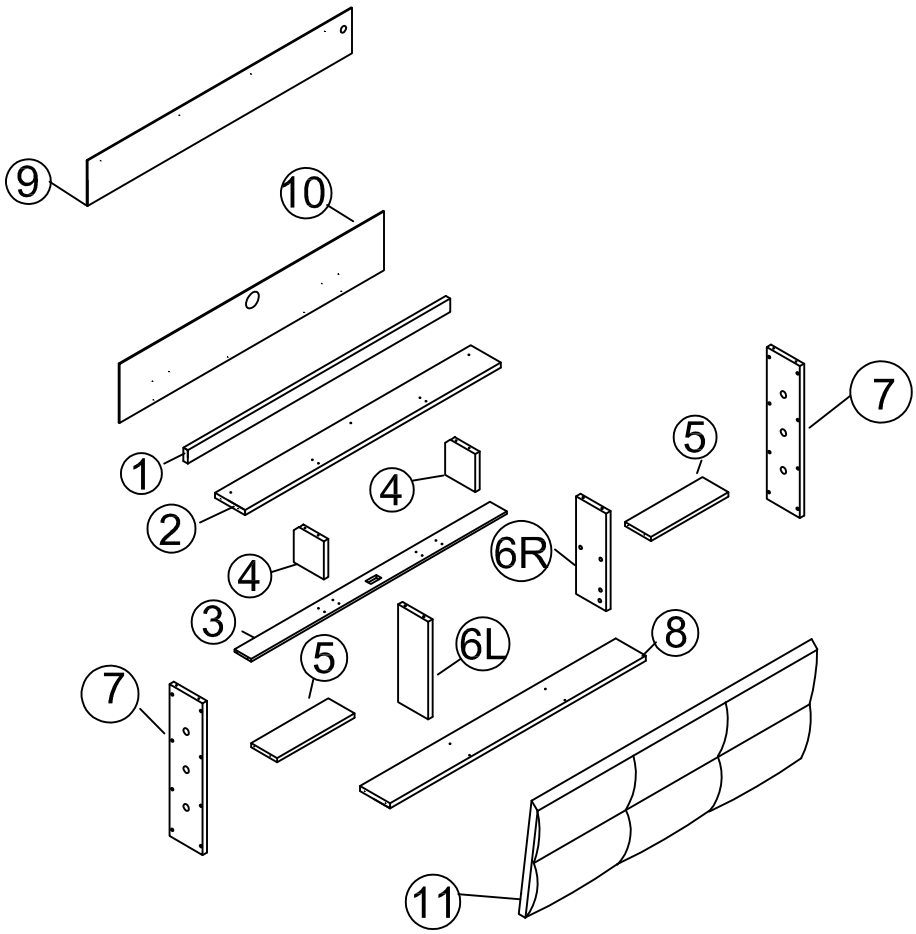

Stückliste(DE)/Liste des pièces(FR)/Part List(EN)

15: 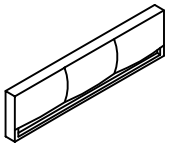 1PC	16: L R 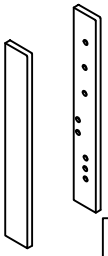 2PCS	17: 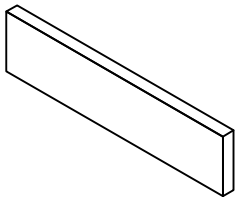 1PC	18: 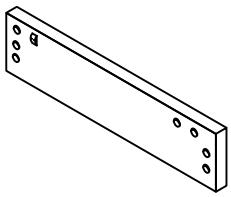 1PC
19: 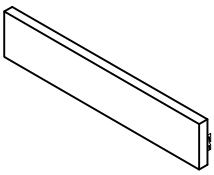 1PC	20: 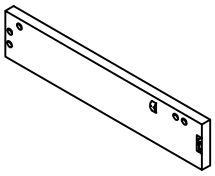 1PC	21: 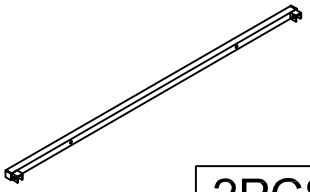 2PCS	22: 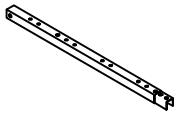 2PCS
23: 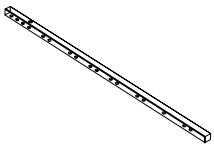 2PCS	24: 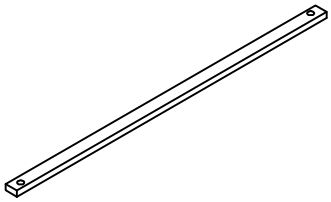 1PC	25: 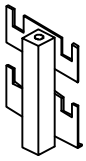 2PCS	26: 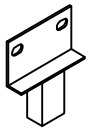 2PCS
27:  2PCS	28:  1PC	29: 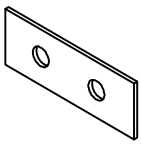 2PCS	30: 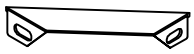 4PCS
31: 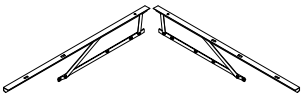 2PCS	32:  8+1PCS	33: 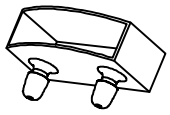 24PCS	34:  1PC
35: 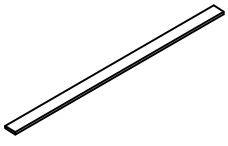 12PCS	36: 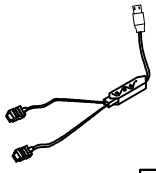 1PC	37: 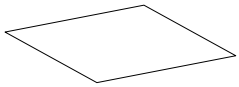 1PC	

EISENWARE-LISTE(DE)/LISTE DE MATÉRIEL(FR)

A: 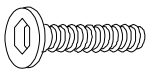 5/16"*35mm 12+1PCS	B:  5/16"*25mm 10+1PCS	C: 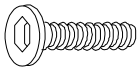 5/16"*40mm 12+1PCS	D: 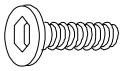 1/4"*35mm 8+1PCS
E:  1/4"*25mm 4PCS	F:  1/4"*15mm 32+2PCS	G:  1/4"*10mm 4PCS	H:  1/4"*65mm 1PC
I: 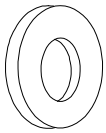 5/16"*19mm 34+2PCS	J:  1/4"*16mm 44+2PCS	K: 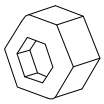 5/16" 12+1PCS	L: 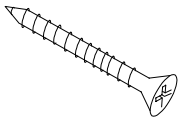 M4*35mm 55+2PCS
M: 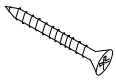 M3*15mm 2PCS	N: 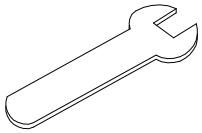 5/16" 1PC	O: 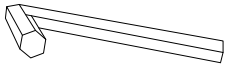 5/16"*100mm 1PC	

STEP 1:

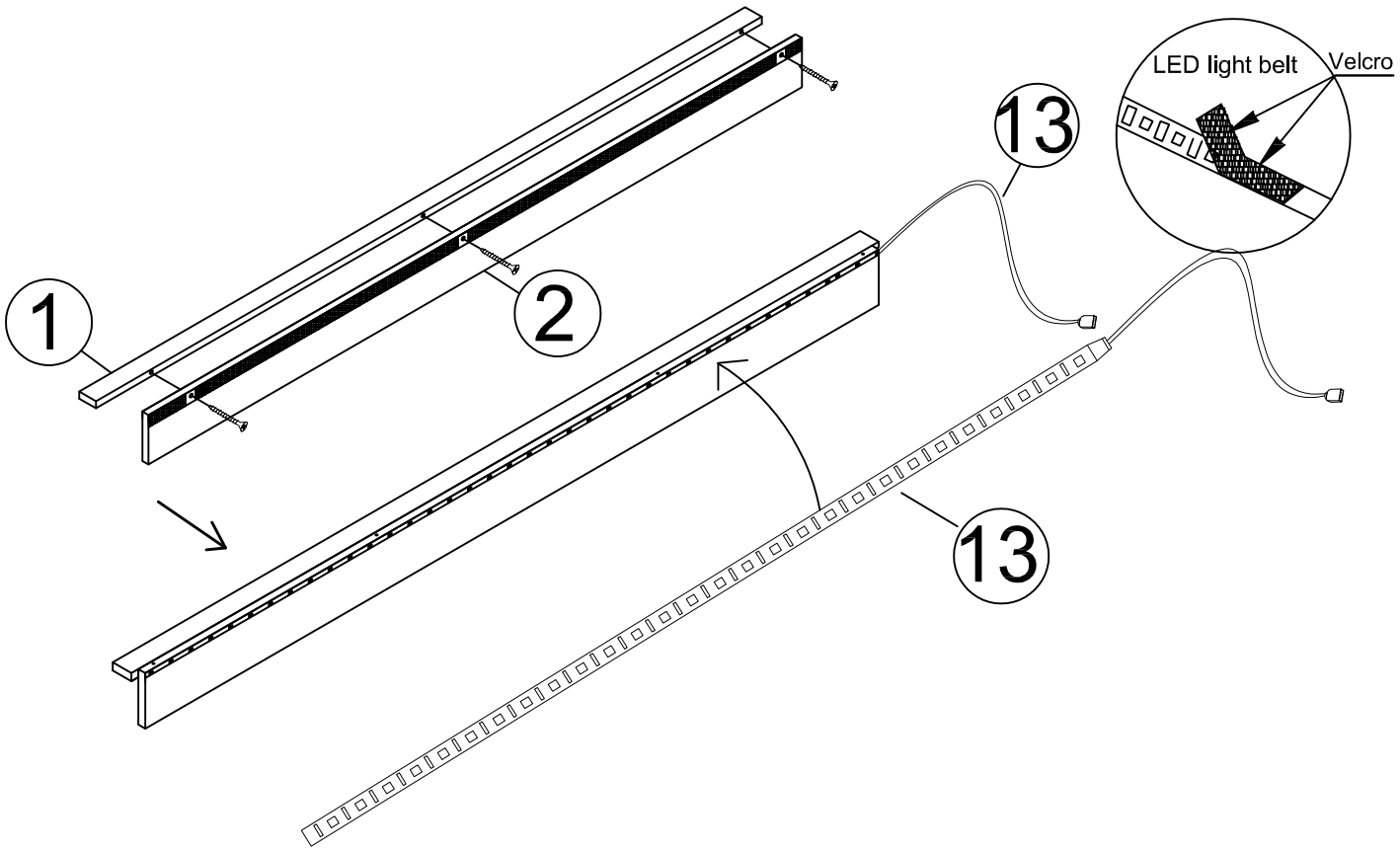

	L*3PCS
	13 *1PC

STEP 2:

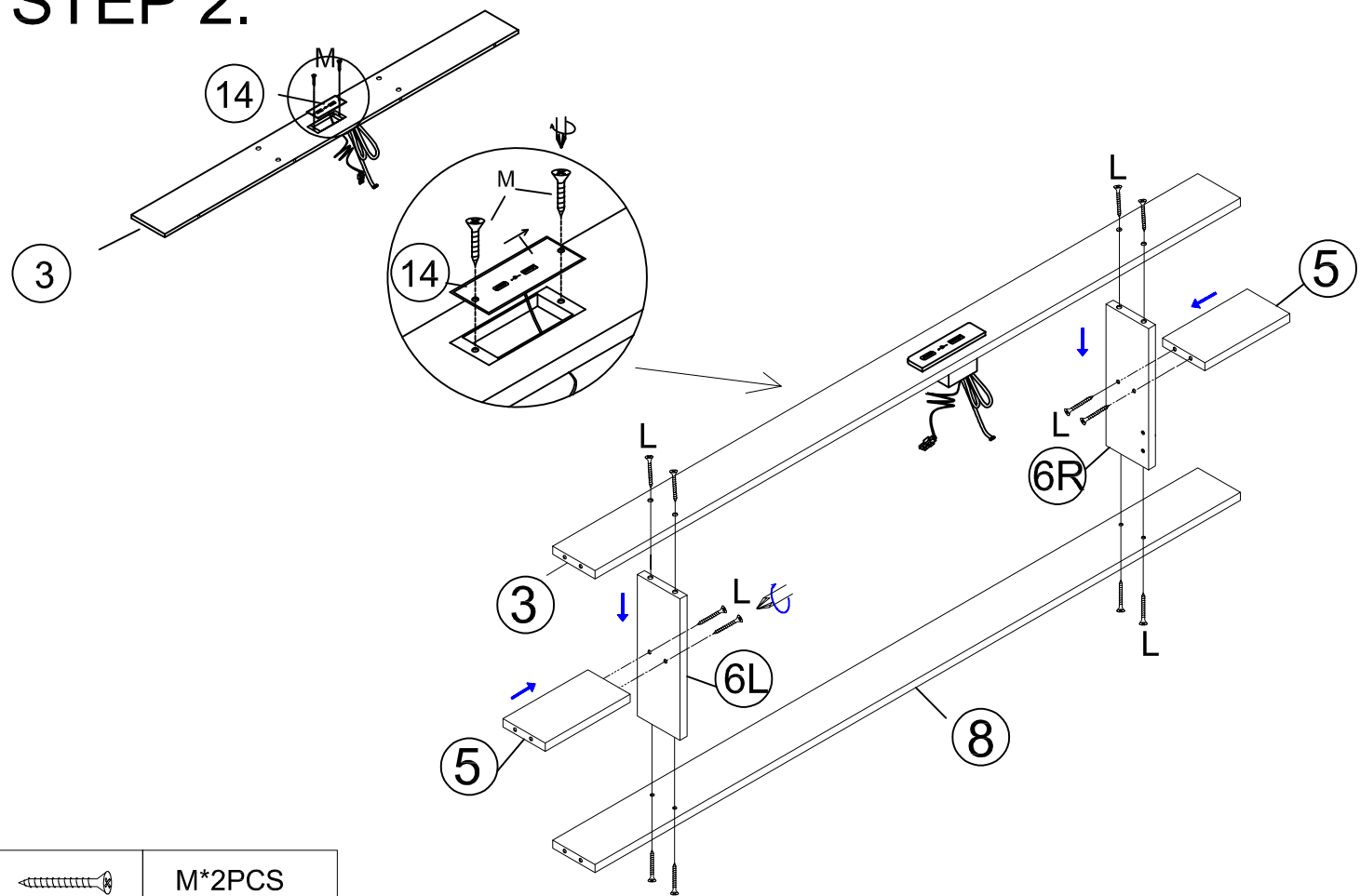

	M*2PCS
	L*12PCS

STEP 3:

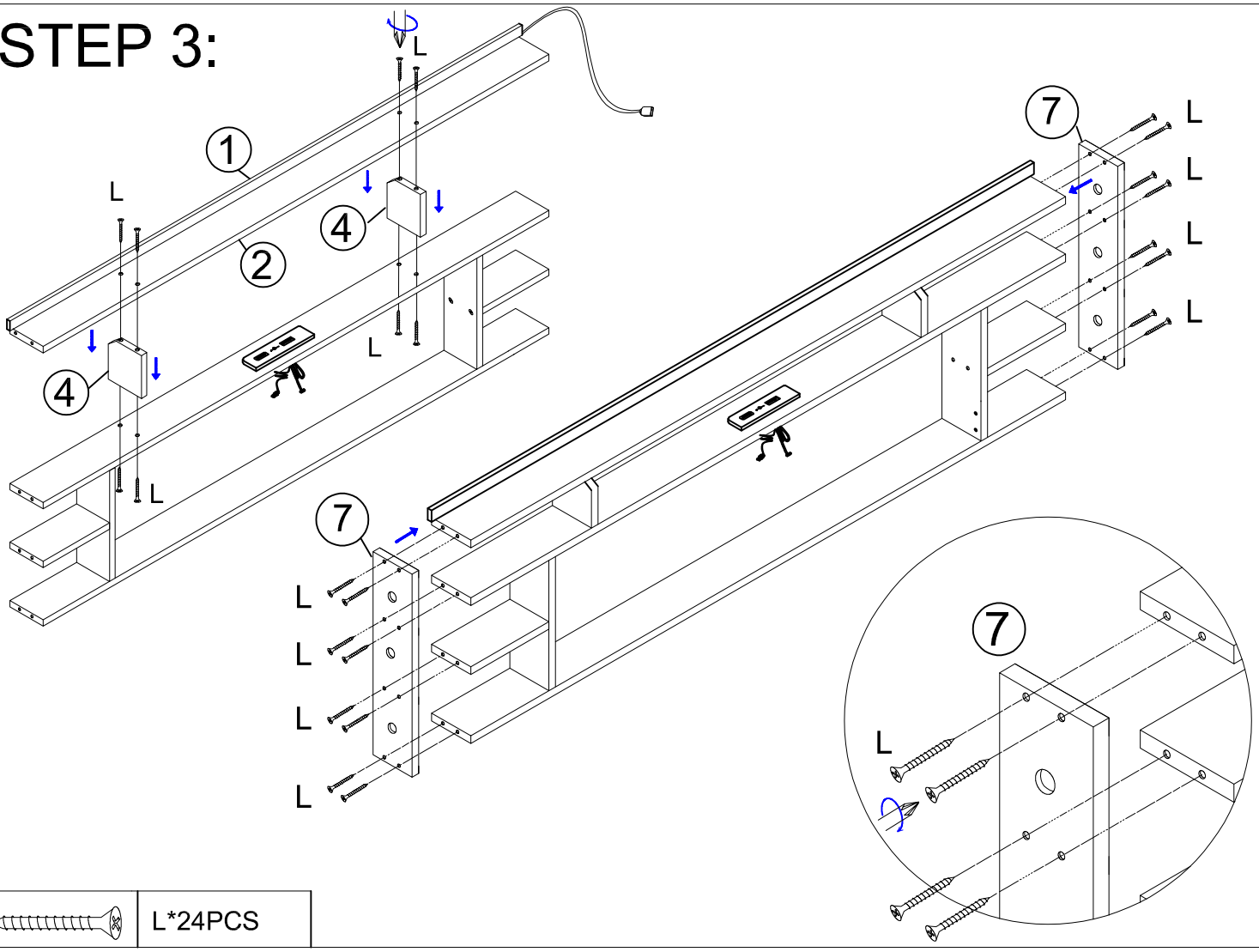

	L*24PCS

STEP 4:

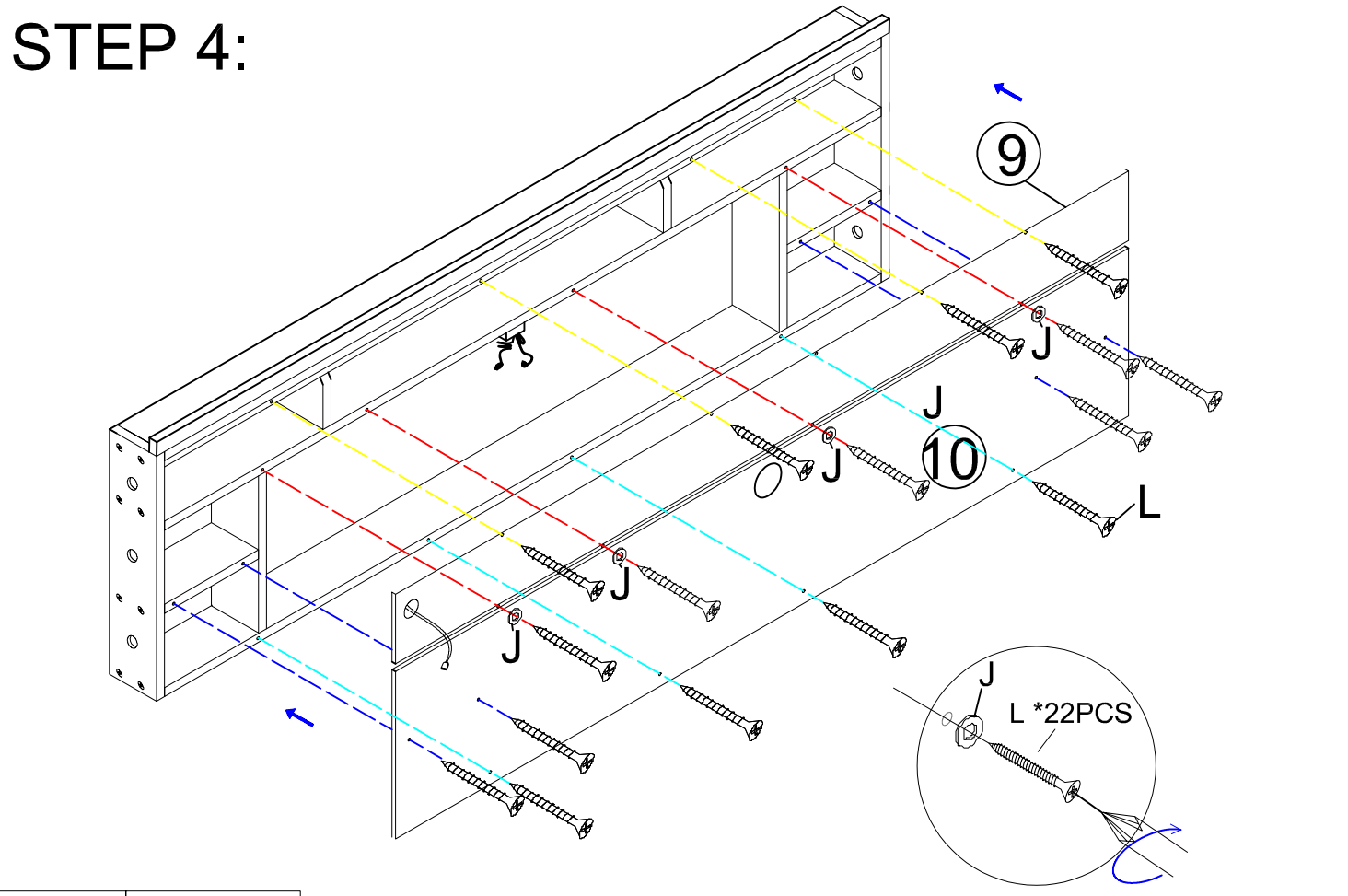

	J X 4PCS
	L*16PCS

STEP 5:

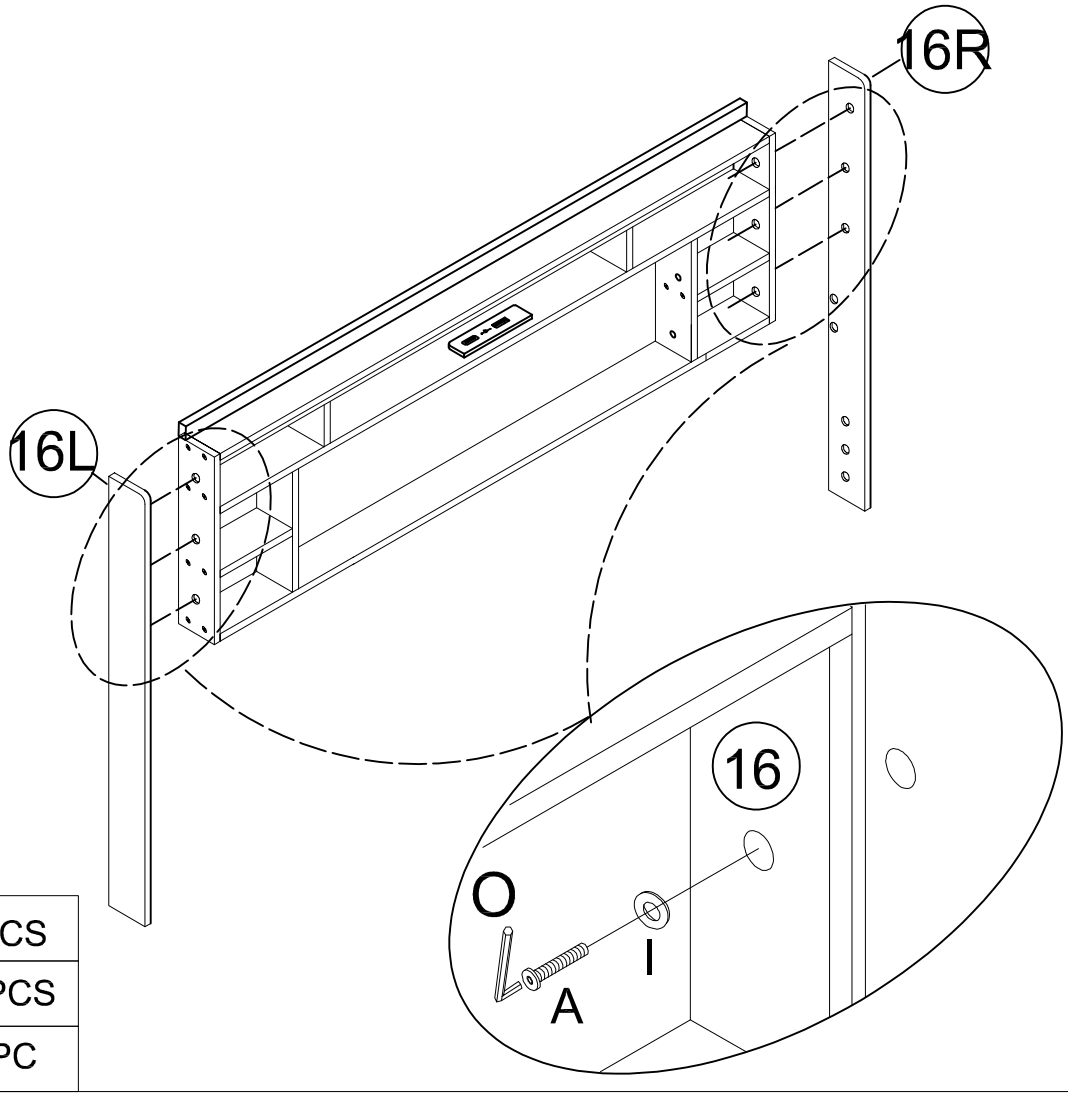

	A X 6PCS
	I X 6PCS
	O X1PC

STEP 6:

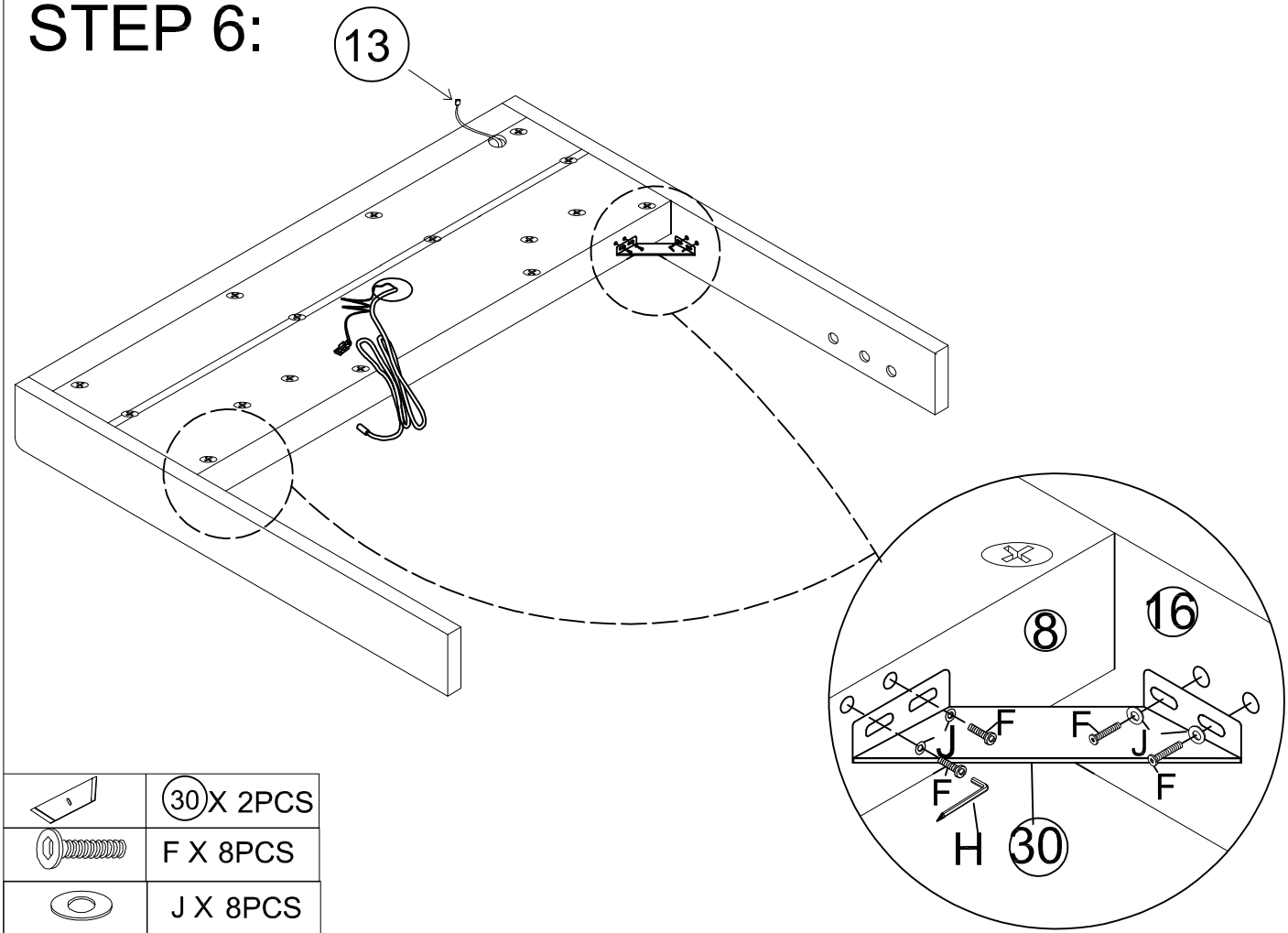

	30 X 2PCS
	F X 8PCS
	J X 8PCS
	H X1PC

STEP 7:

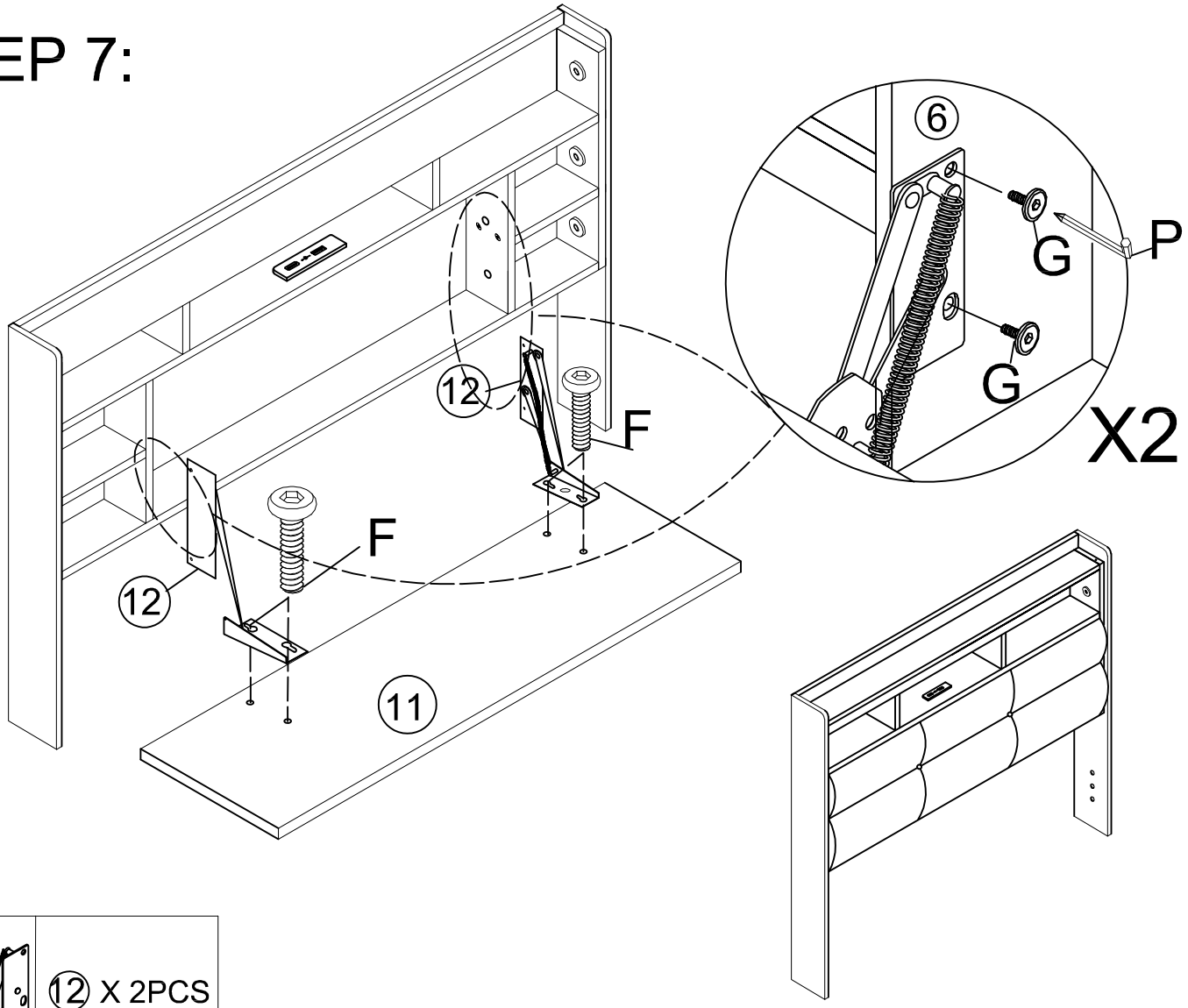

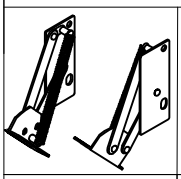	⑫ X 2PCS		
	F X 4PCS		G X 4PCS

STEP 8:

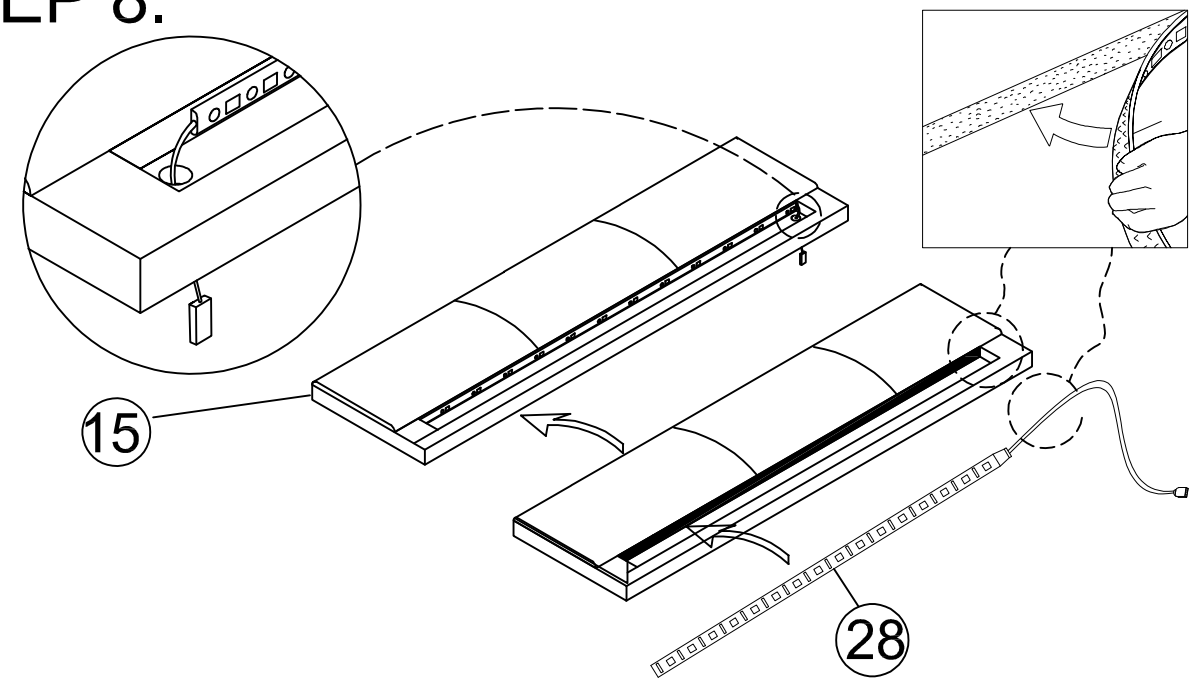

	㉘ *1PC

STEP 9:

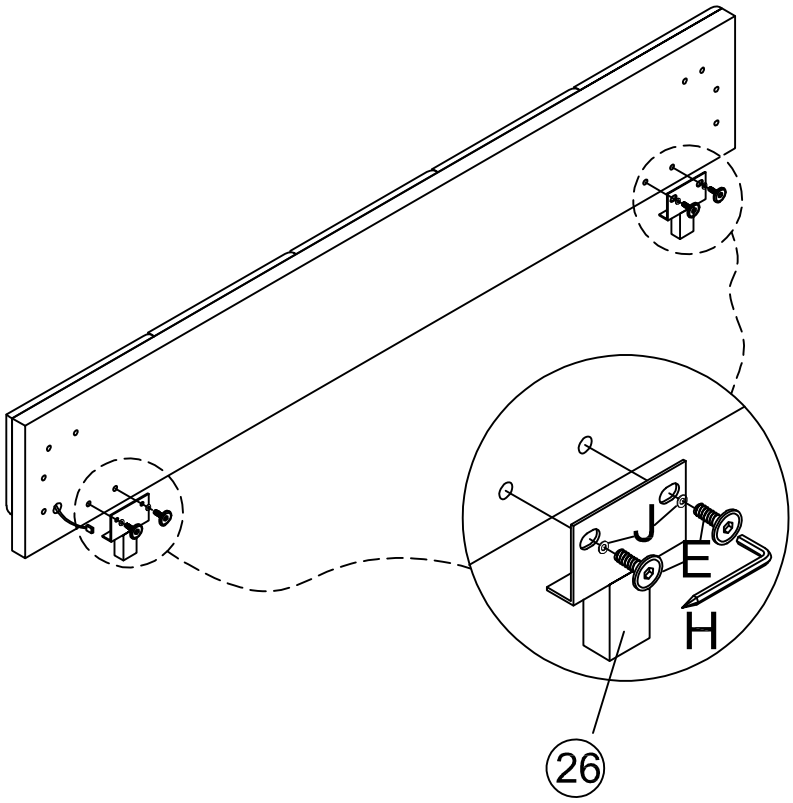

	E X 4PCS
	J X 4PCS
	O X1PC
	H X1PC

STEP 10:

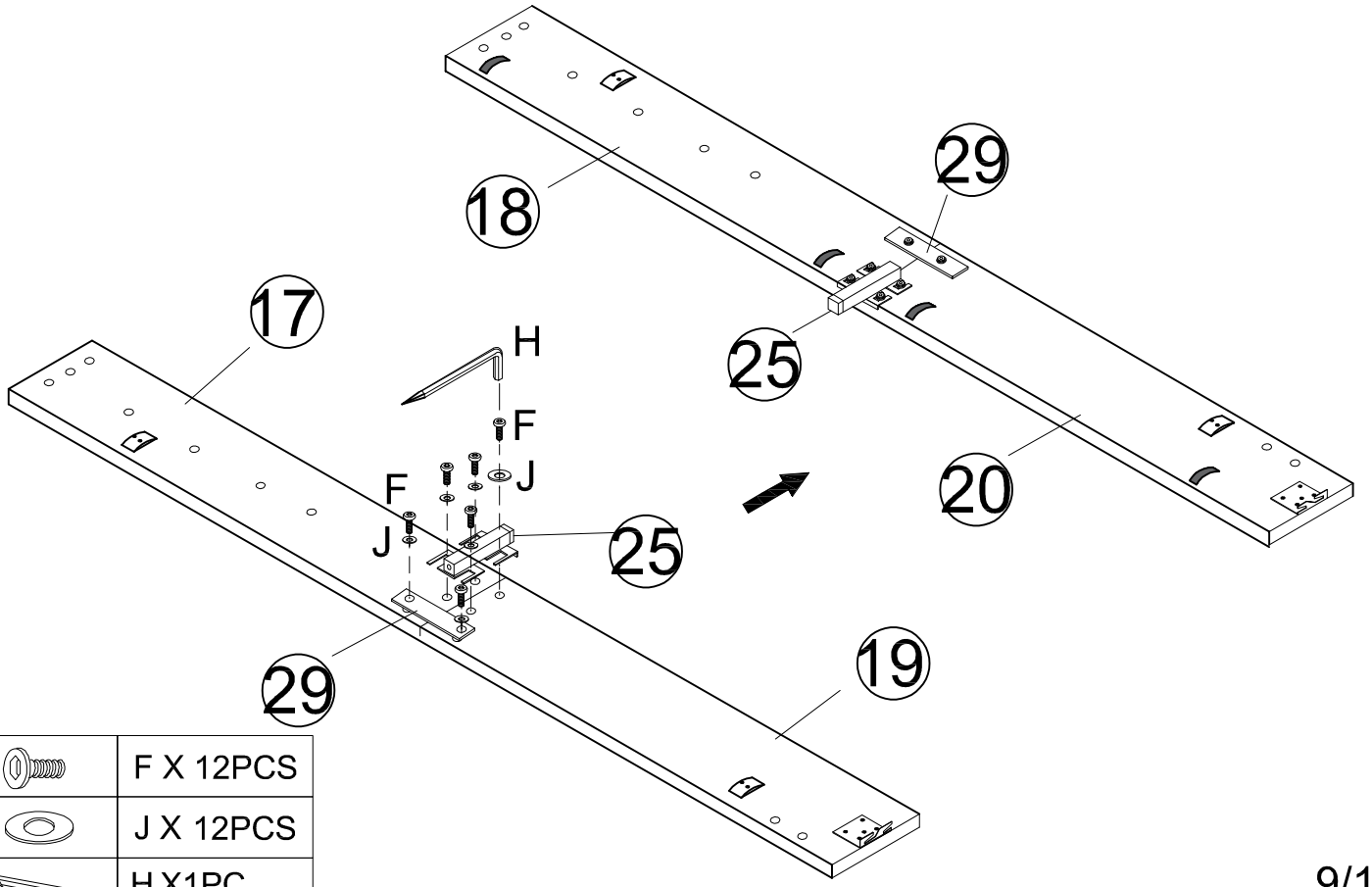

	F X 12PCS
	J X 12PCS
	H X1PC

STEP 11:

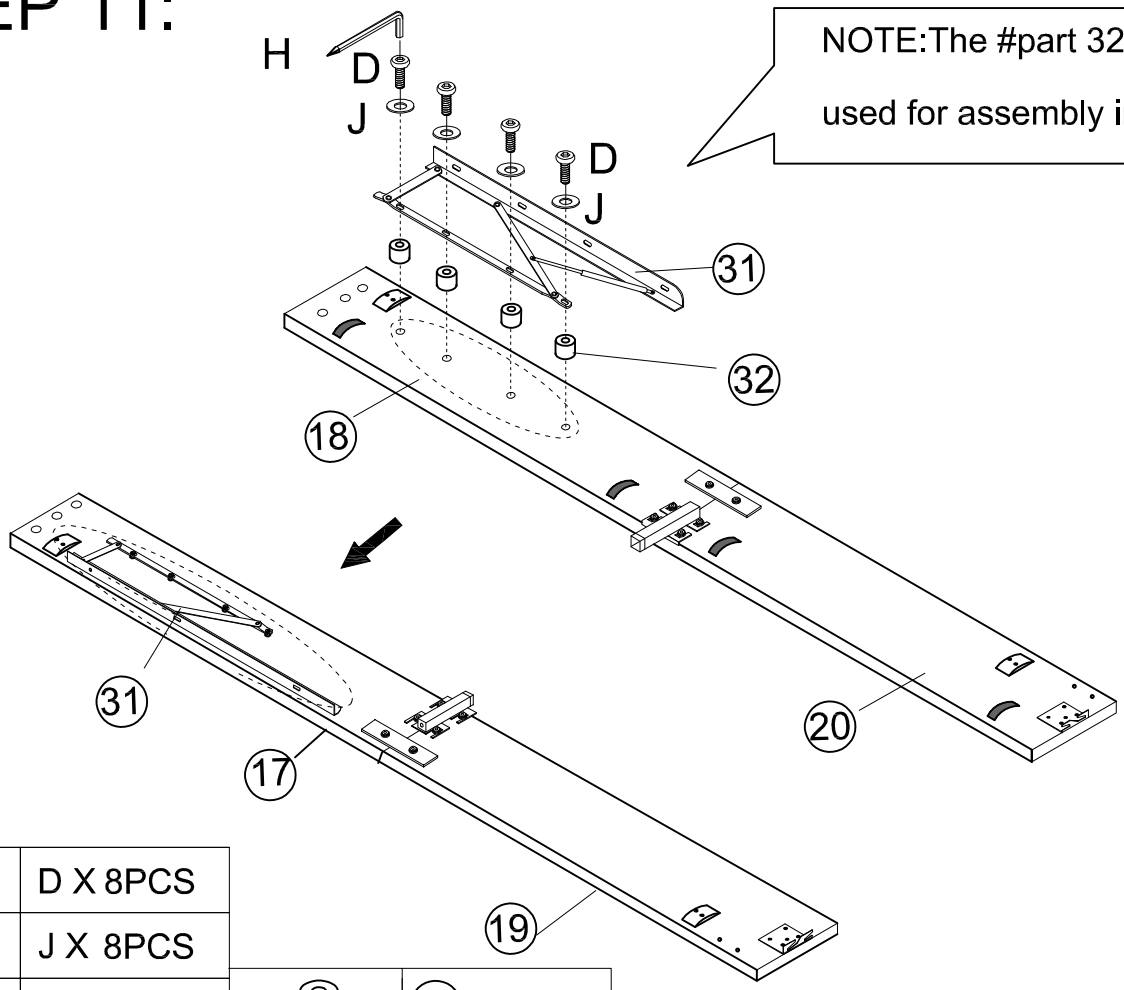

NOTE:The #part 32 must be used for assembly in this step!

	D X 8PCS
	J X 8PCS
	H X1PC

	32 X 8PCS

STEP 12:

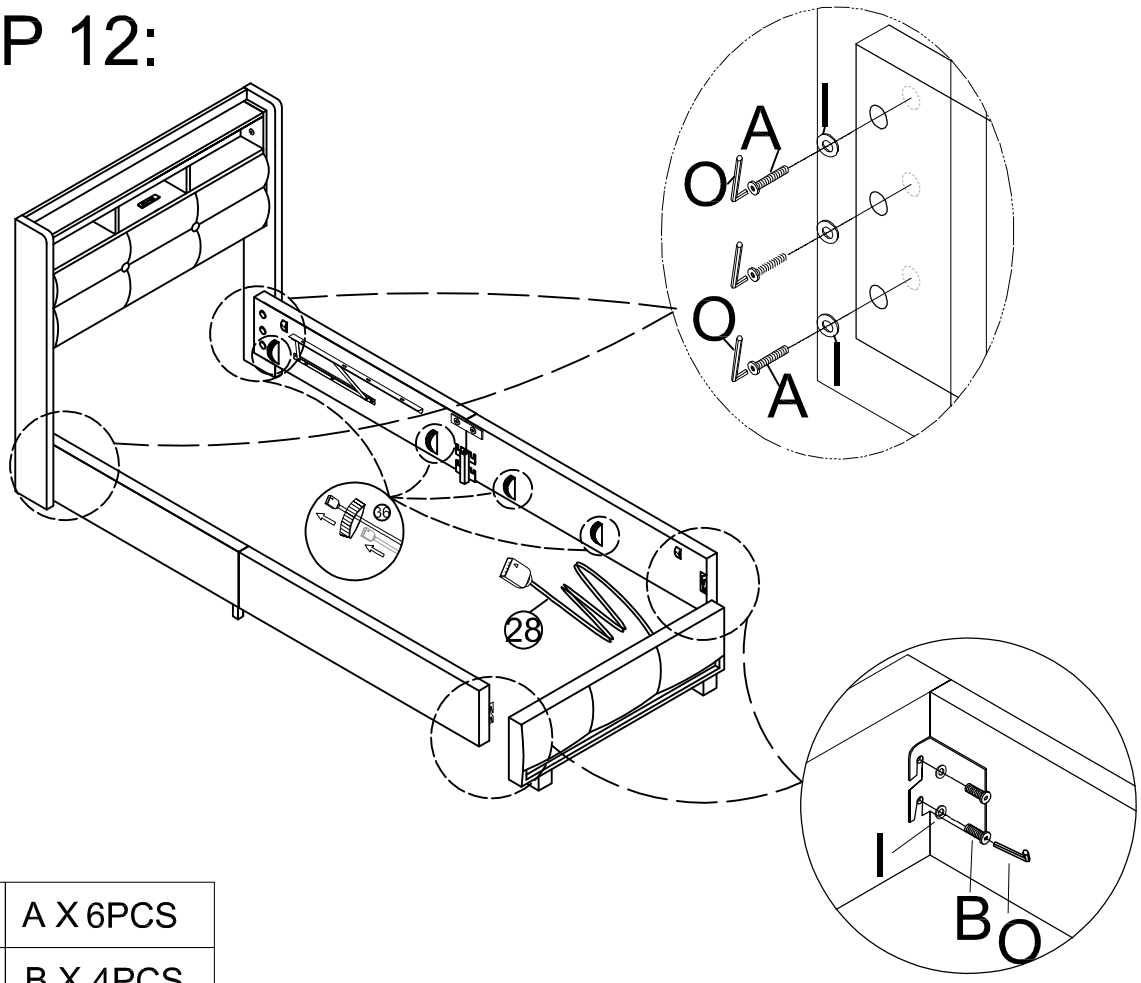

	A X 6PCS
	B X 4PCS
	I X10PCS

	O X1PC

STEP 13:

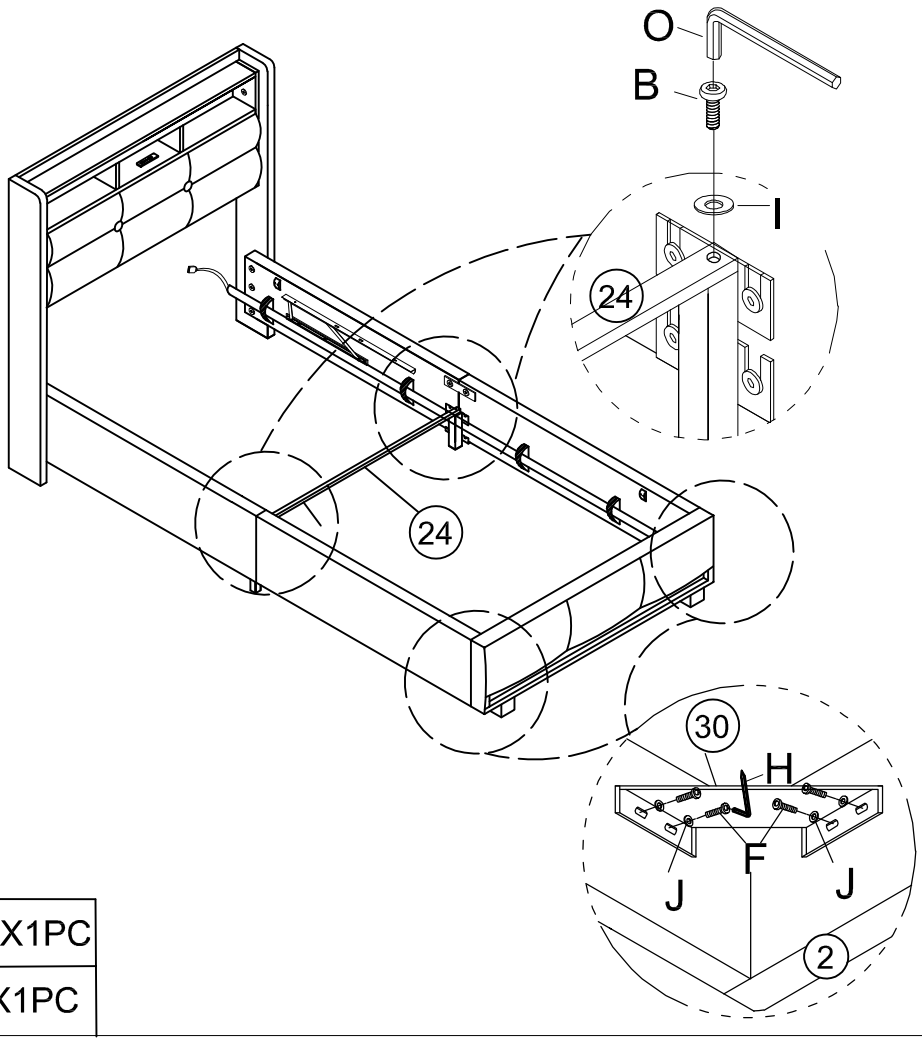

	30 X 2PCS
	B X 2PCS
	F X 8PCS
	I X 2PCS
	J X 8PCS

	O X1PC
	HX1PC

STEP 14:

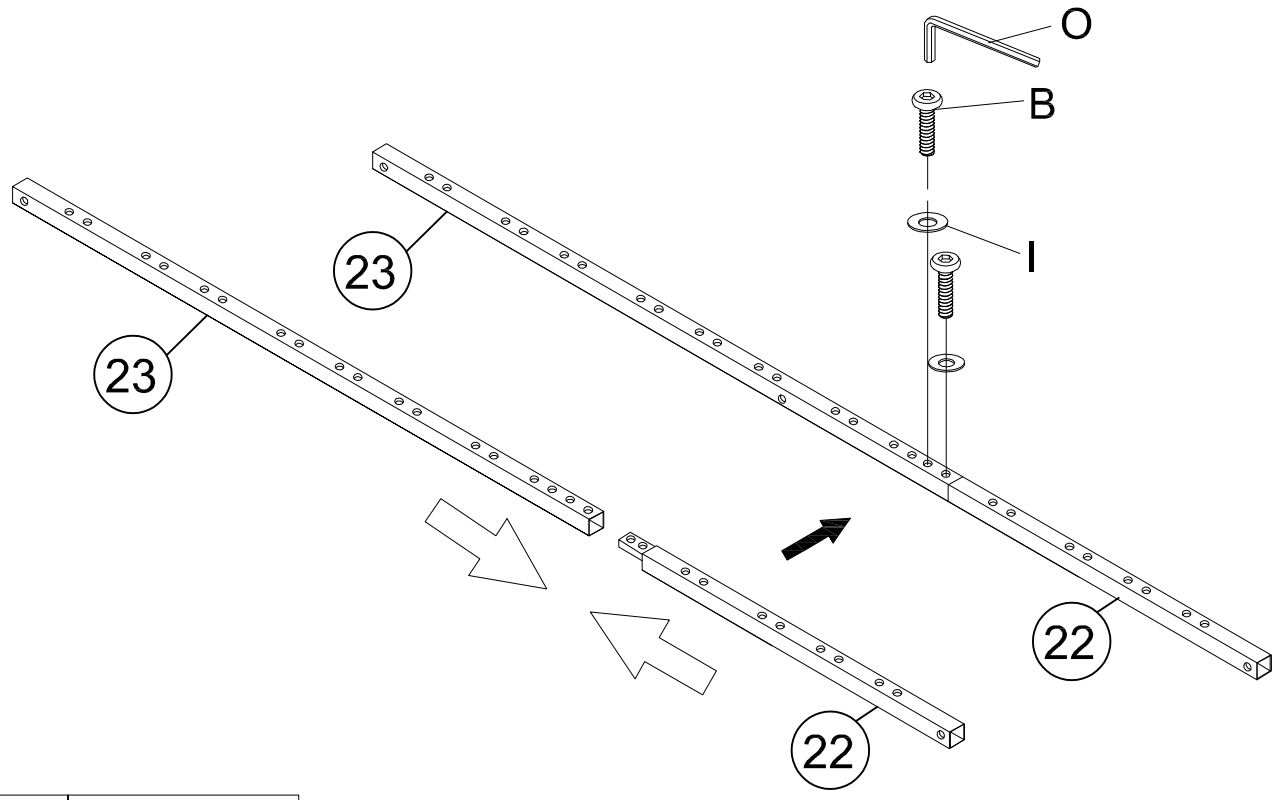

	B X 4PCS
	I X 4PCS
	O X1PC

X 2

STEP 15:

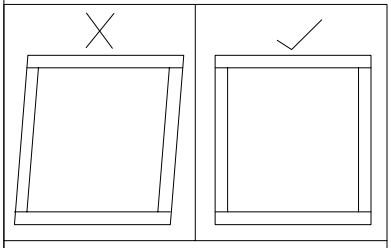

(DE)
Hinweis:Stelle Sie sicher,dass die Rahmenbaugruppen rechtwinklig sind.

(FR)
Remarque:Assurez-vous que l'assemblage du cadre est carré.

(EN)
Note: Make sure that the frame sub - assemblies are at right angle.

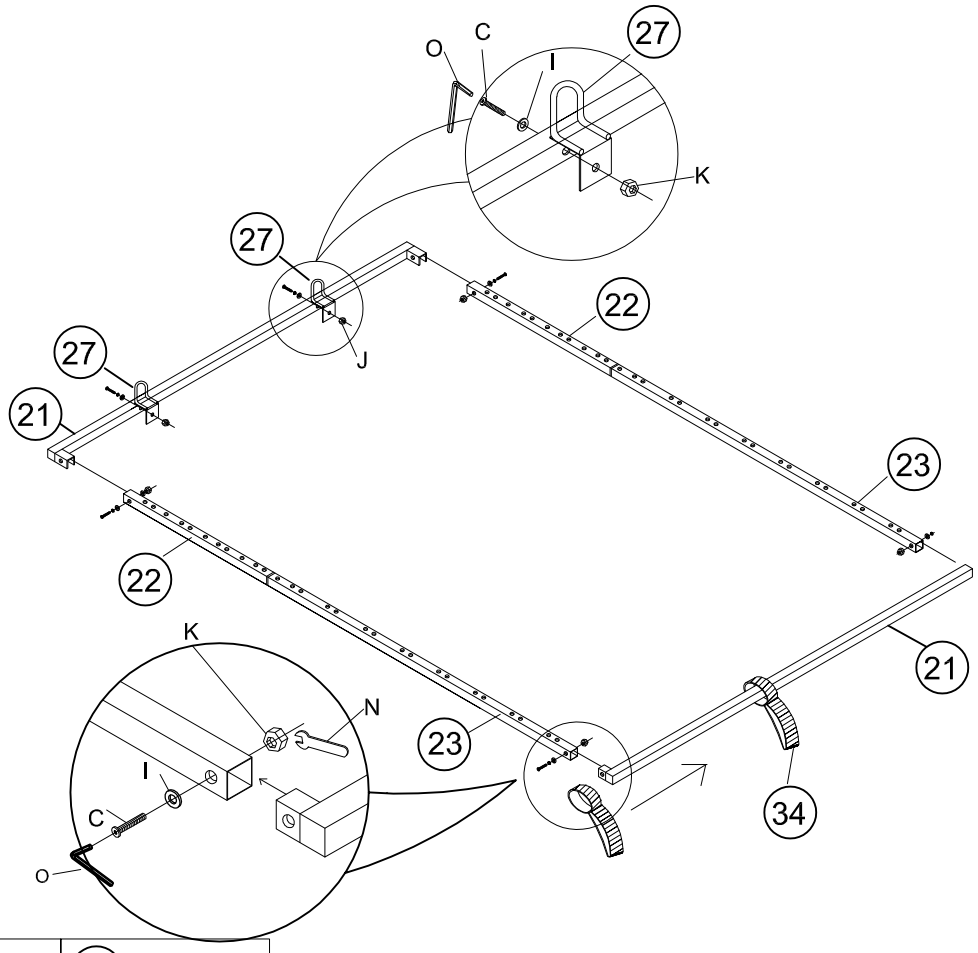

C X 6PCS		27 X2PCS	
I X 6PCS		34 X1PCS	
K X 6PCS			
O X1PC			
N X1PC			

STEP 16:

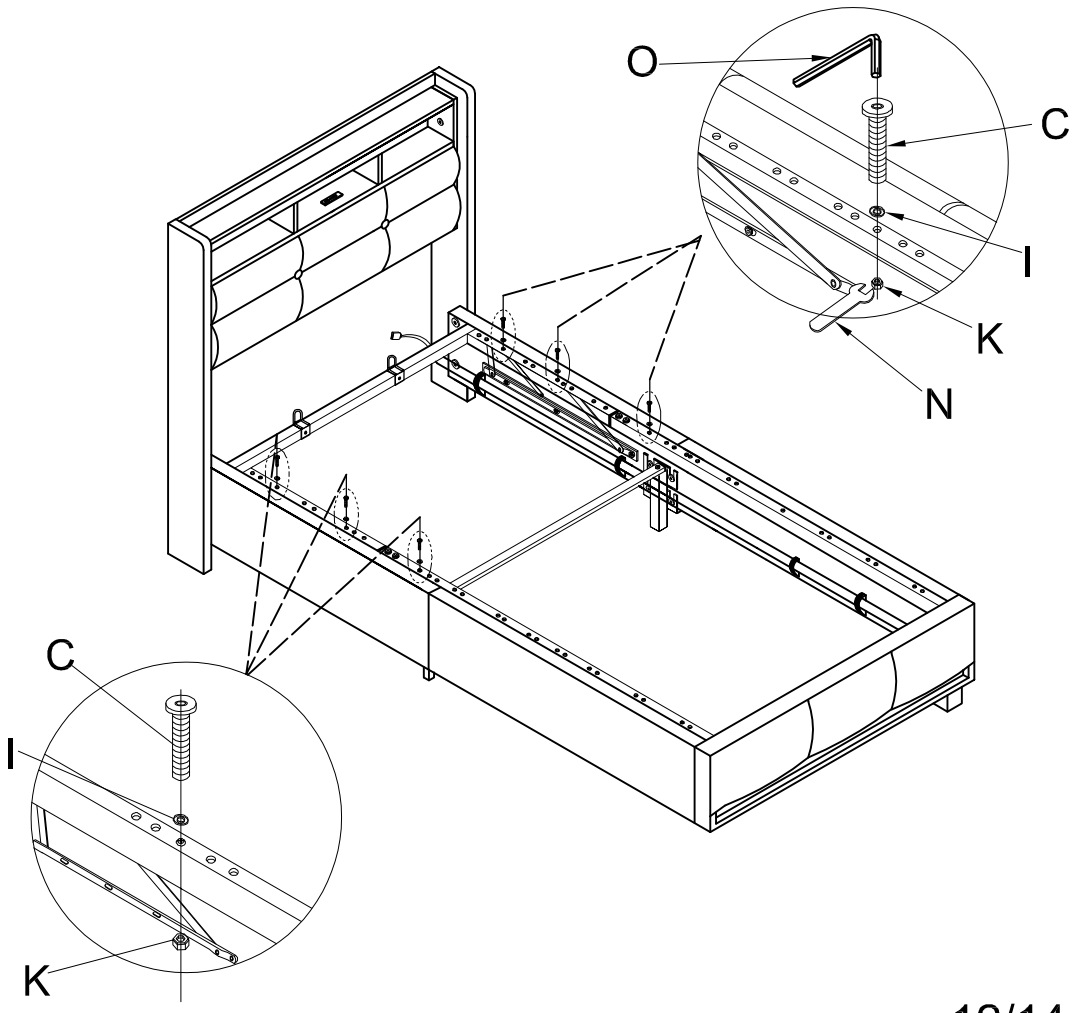

C X6PCS	
I X 6PCS	
K X 6PCS	
O X1PC	
N X1PC	

STEP 17:

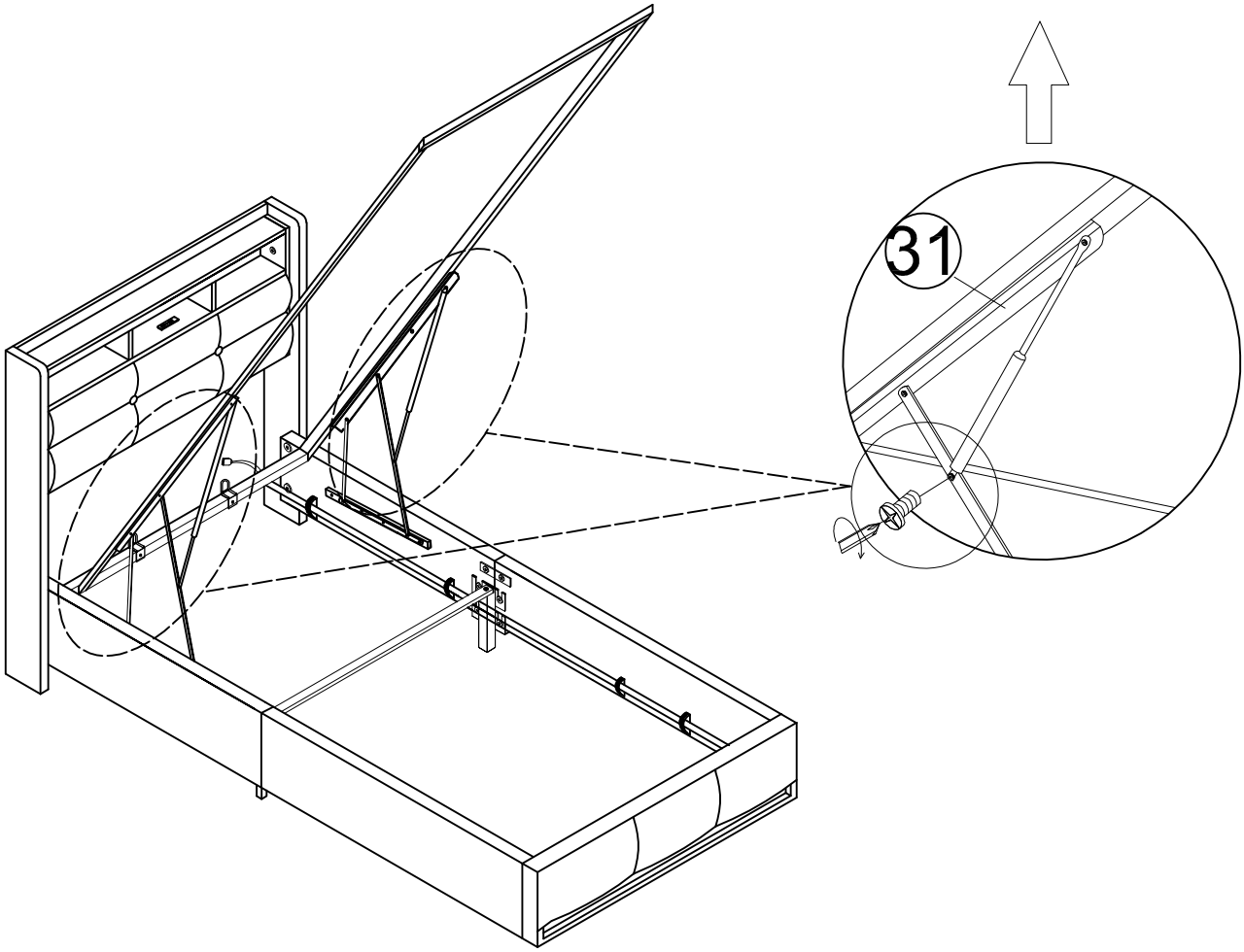

STEP 18:

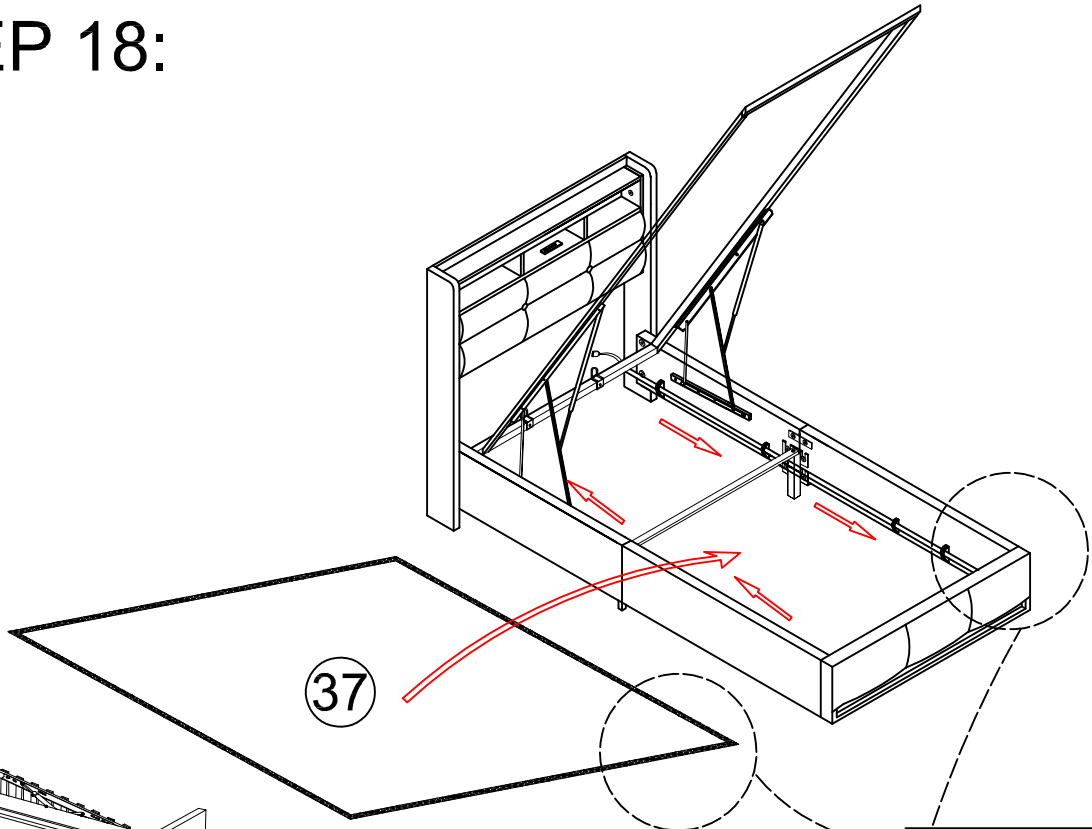

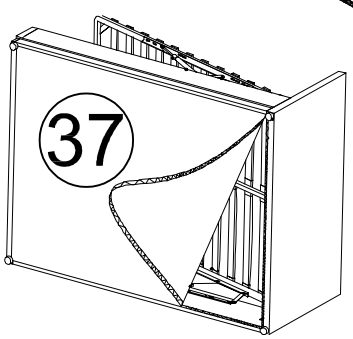

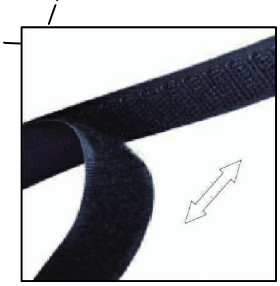

STEP 19:

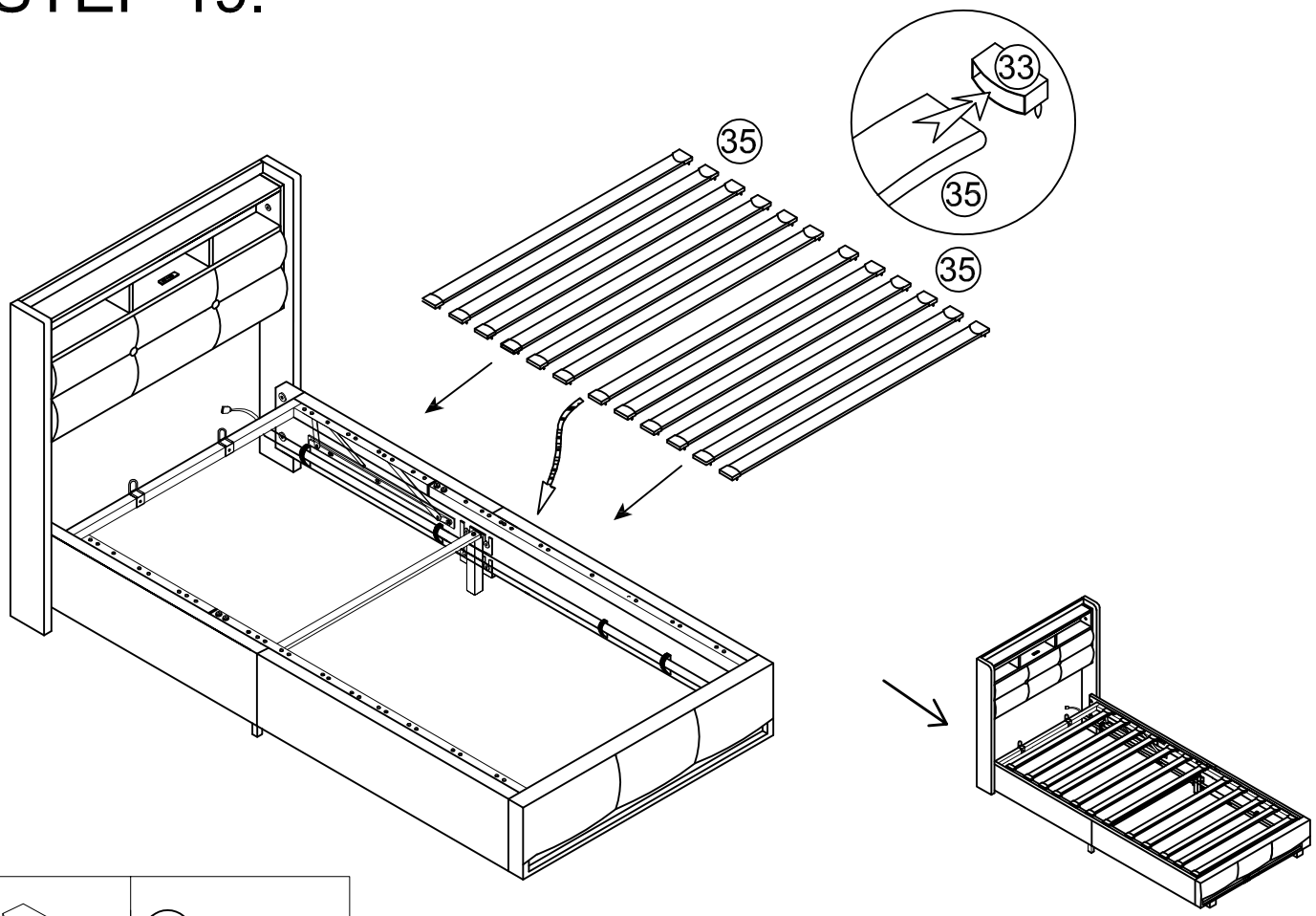

	33 X24PCS

STEP 20:

