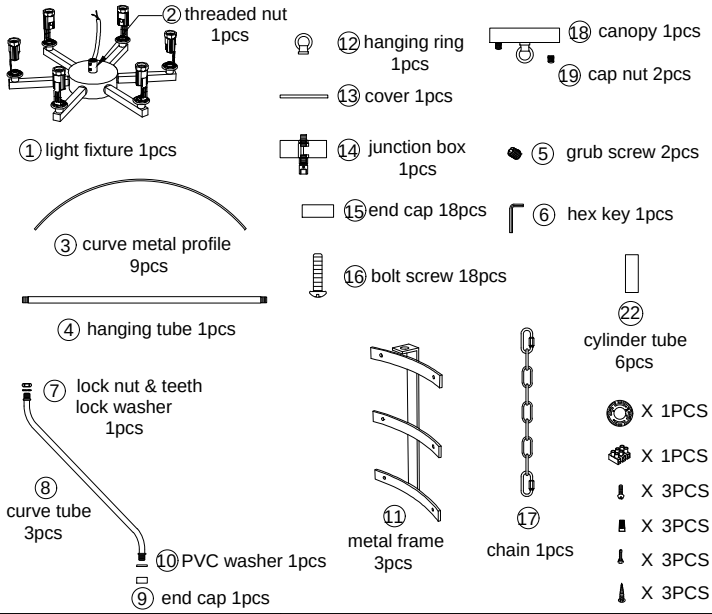

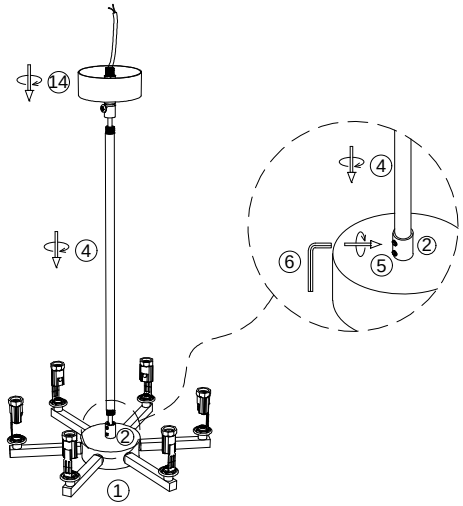

1.Let the wire of fixture ① go through the tube ④ and junction box ⑭, rotate to install both to the fixture, fix the tube ④ with grub screw ⑤ by hex key ⑥.

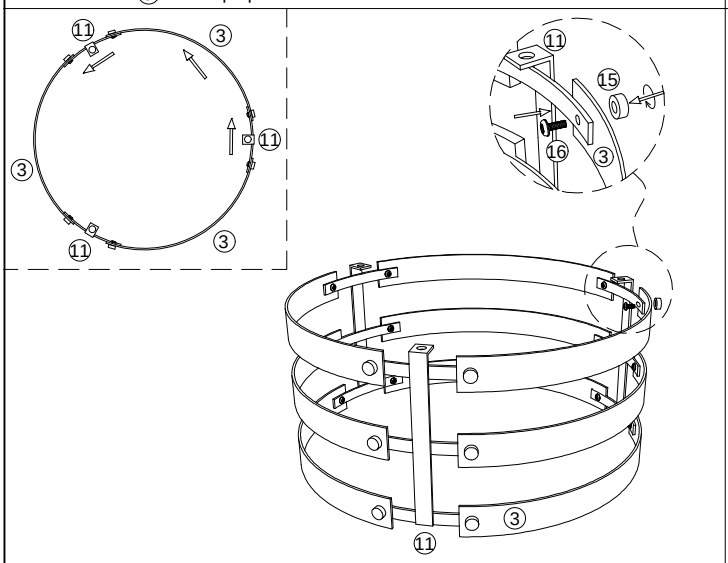

2.Combine the curve metal profile ③ and metal frame ⑪ to a complete lampshade with bolt screw ⑯ and end cap ⑮, don't tighten the screw ⑯ until all screws ⑯ ready in the hole of profile ③.

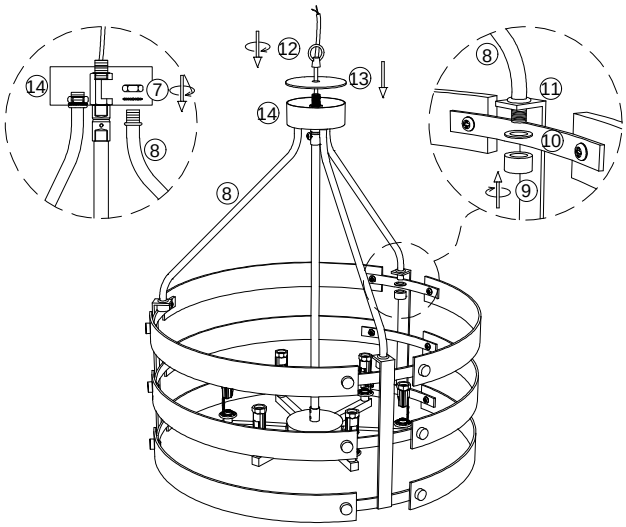

3.Install the curve tube ⑧ to the metal frame ⑪ with end cap ⑨ and PVC washer ⑩, after that install another side of curve tube ⑧ to the junction box ⑭ with lock nut & teeth lock washer ⑦.
4.Let the wire go through the cover ⑬ and ring ⑫, rotate ring ⑫ to close the cover.

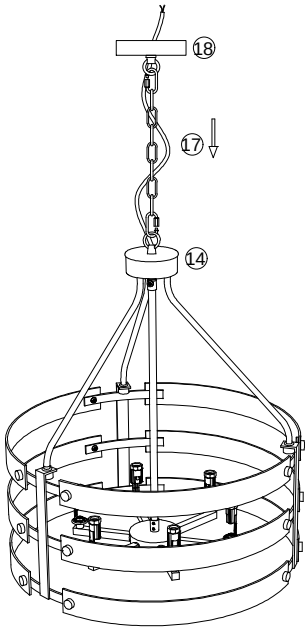

5.Hang the fixture to the canopy ⑱ with chain ⑰,let the wire go through the chain ⑰ and canopy ⑱.

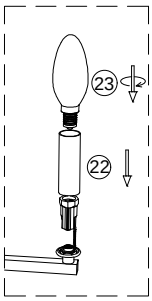

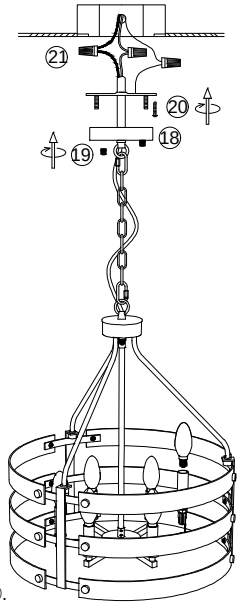

6.Install the bracket to the ceiling junction box with screw ⑳.
7.Connect the wire to your home line with cap connecter ㉑.
8.Install the fixture to the bracket with cap nut ⑲.
9.Put the cylinder tube ㉒ on the bulb holder and install the bulb ㉓.

Please read carefully before installation!!!
Note : Please make sure that the electricity is powered off during installation !
Only a professional electrician should install this kind of product !