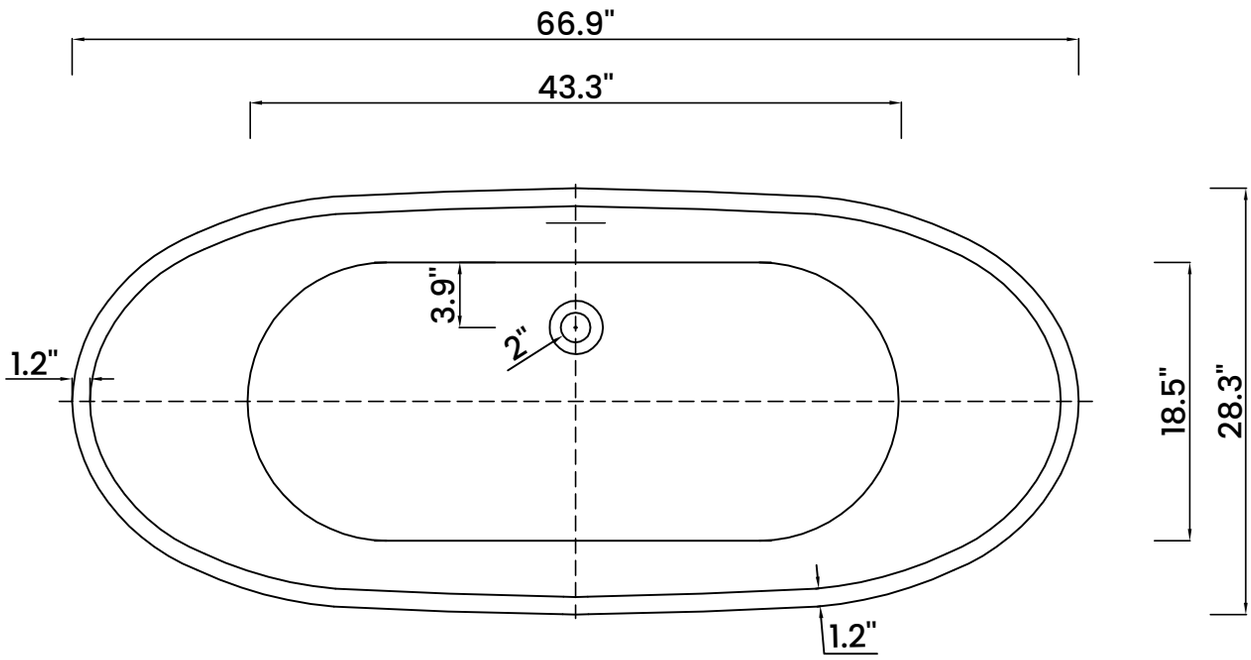
66.9"
43.3"
3.9"
2"
1.2"
18.5"
28.3"
1.2"

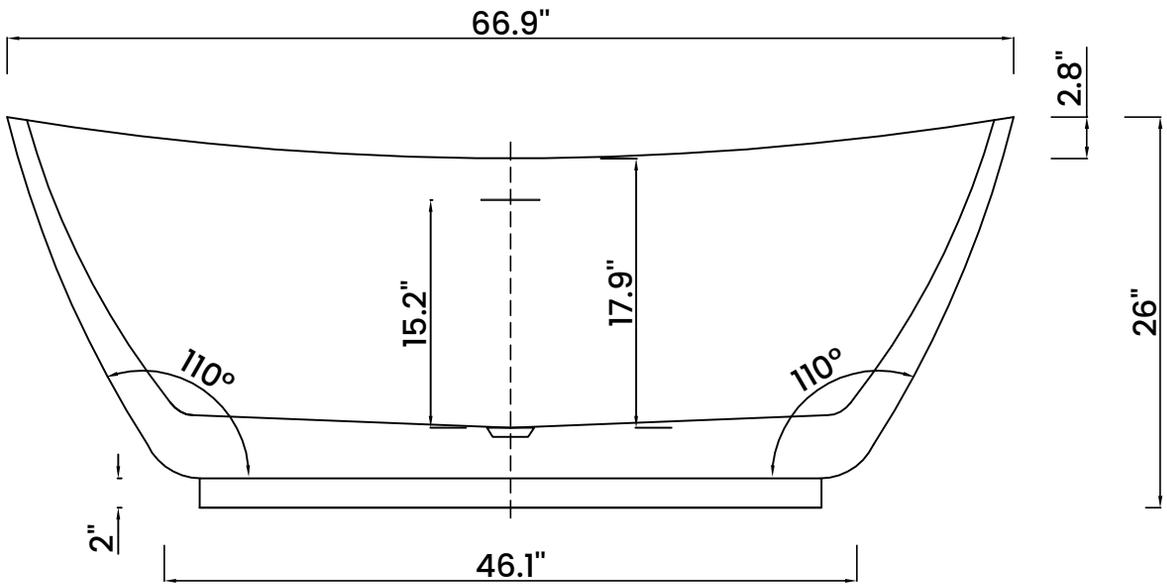
66.9"
2.8"
15.2"
17.9"
110°
110°
26"
2"
46.1"

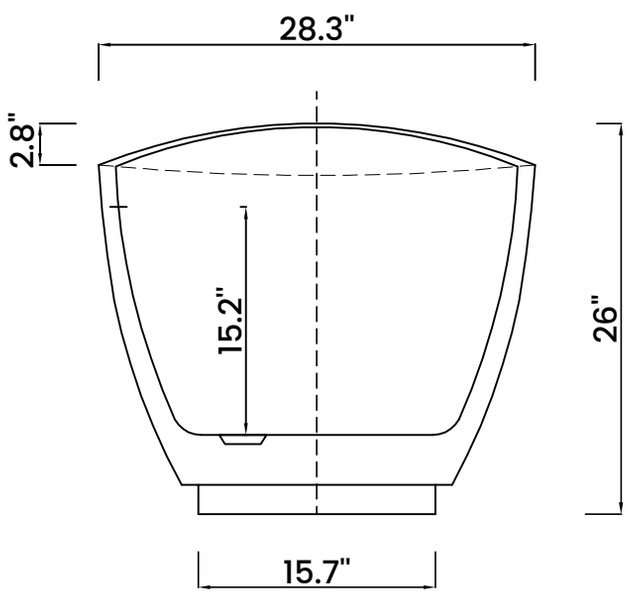
28.3"
2.8"
15.2"
26"
15.7"