Owner Manual

WARRANTY

We strive to offer high quality product and we also try our best to satisfy each customer that order from us, no matter on products or services as needed. Each customer receives a record of their order, such as the order number or item receipt. For any items that are out of warranty period, you may still be able to purchase the replacement parts from our company if they are available.

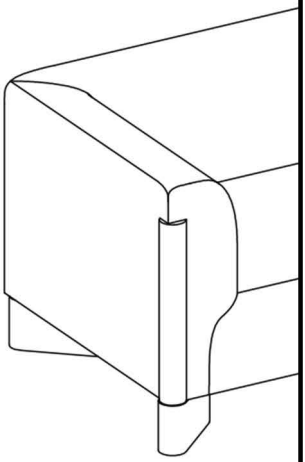

MAINTENANCE AND WARNING

Please read the manual thoroughly before you start installing.

Please keep the product away from sharp object.

Packaging and small parts may have chocking hazard, please keep them away from children and pets.

Please clean the product according to each clean code, check the product description for more information.

Please keep the product away from fire.

If you have any other questions, please contact us, we will be glad to help you out.

If the product is placed under direct sunlight, the pattern or color might fade away overtime.

Check the product periodically to make sure everything is secured and tightened.

Always use proper tools for installation.

Do not jump on the product.

two people

Around 15 min

PRODUCT DESCRIPTION

Premium Chenille Upholstery: Upholstered in thick, high-quality chenille fabric that feels plush and softly textured while maintaining excellent abrasion resistance. The material delivers a relaxed yet refined look, offering warmth, depth, and durability suitable for daily use in active living spaces.

Balanced Comfort System: Features a high-density foam sponge layered over an independent pocket spring system. The foam offers immediate cushioning and pressure relief, while the springs provide deep, stable support and lasting rebound to prevent sagging over time.

Solid Wood Structural Core: Constructed with a full solid wood internal frame, solid wood sofa legs, and an added center support leg. This reinforced structure improves mid-seat load capacity and ensures long-term stability and durability.

Generous Seating Proportions: Designed with an enlarged seat width and depth to comfortably accommodate two people, while also allowing a single user to lounge or recline casually.

Refined Ergonomic Details: Hidden zippers keep cushions visually clean and tailored, while the optimized seat height and backrest angle support natural posture and relaxed seating comfort.

EXPLODED VIEW

The product's left and right are determined by sitting posture

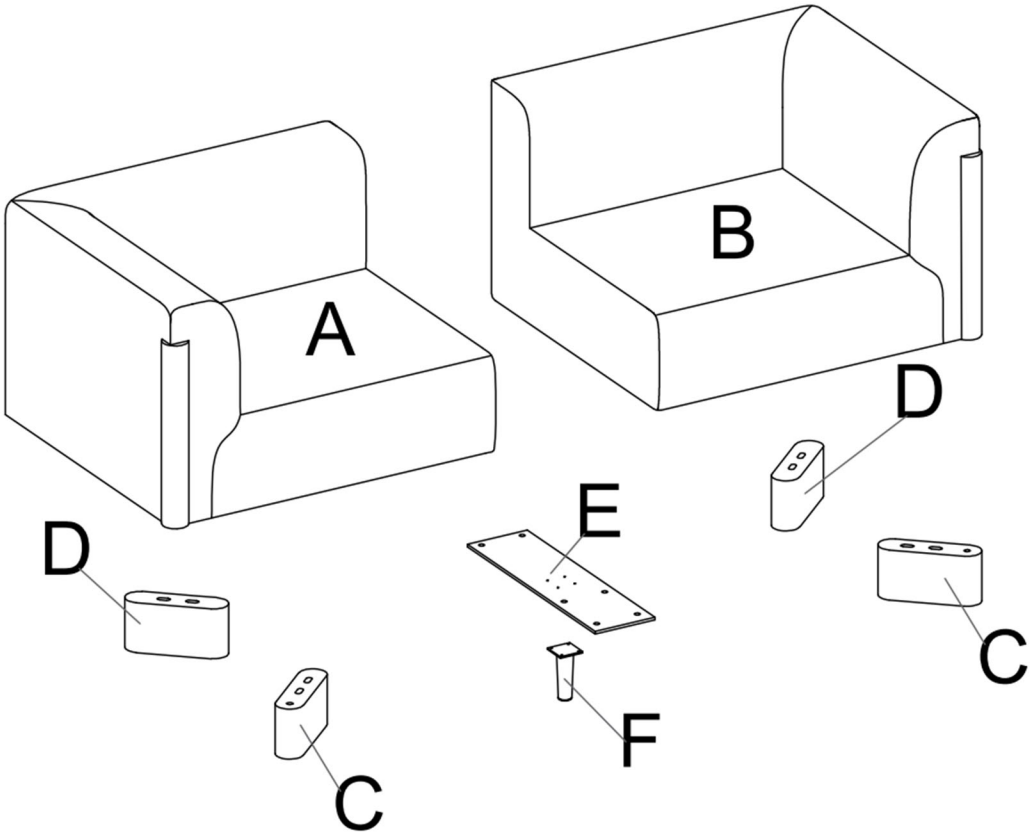

PARTS

A*1

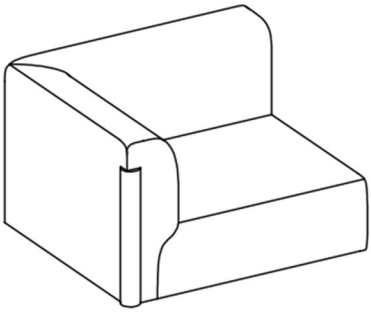

Right sofa

B*1

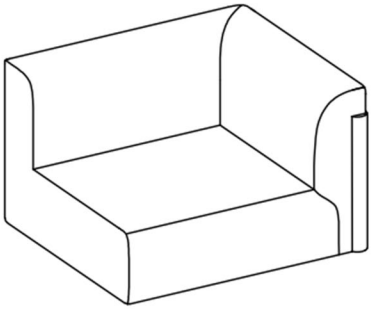

Left sofa

C*2

Front legs

D*2

Rear legs

E*1

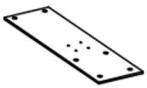

Connect panel

F*1

Middle legs

HARDWARE

TOOL LIST

NOTE: Designated with (★) We provide additional spare parts in the hardware package

①*4

M6*16mm
Bolt

②*6

★M8*50mm
Bolt

③*8

★M8*100mm
Bolt

④*2

Wooden
dowel

⑥*1

Allen key

Please make sure all hardware & packing material fitting the list. Especially some small accessories may be missing during transportation. Please contact us if you have any question.

step 1 ---Connect the Sofa Sections (A&B)

Align the left and right sofa (B&A) sections as illustrated.
Secure them together using the provided connect panel (E).
Tighten all bolts (2) firmly with the included Allen wrench (6).

Notice:
We suggest tightening the bolts for 30-50% first, make sure the process is correct and bolt holes are aligned, then fully tightening them all.

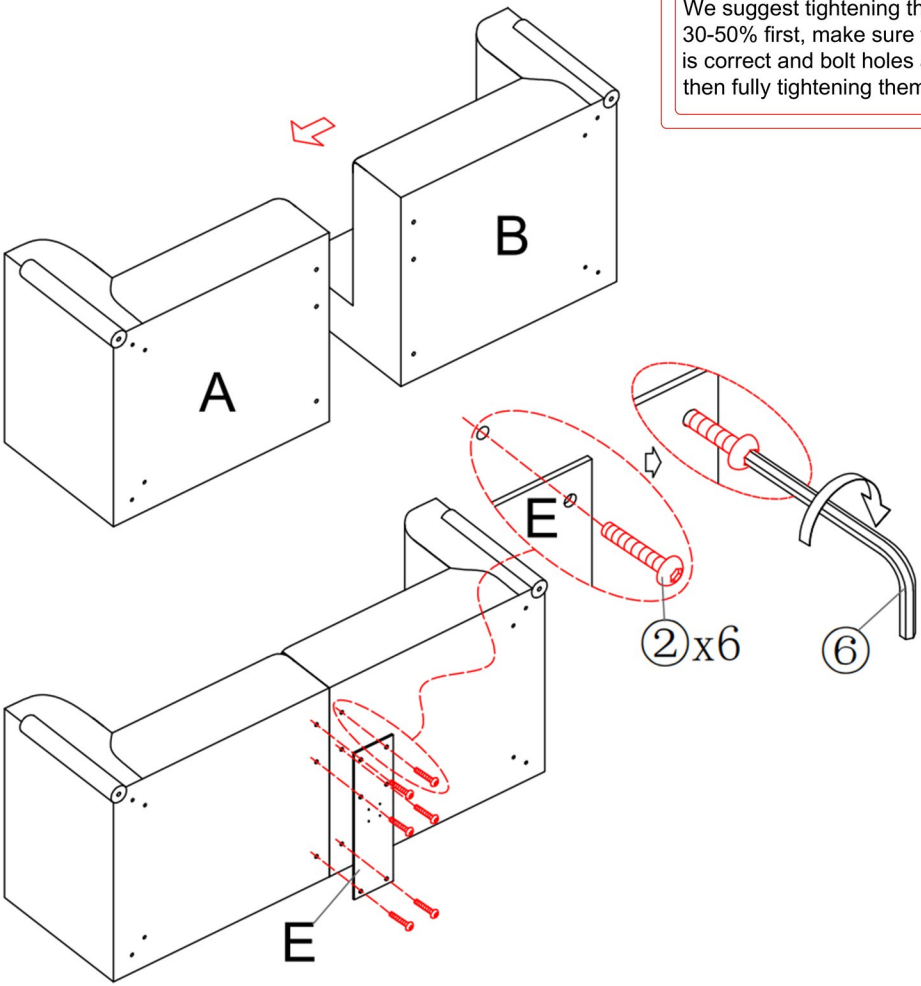

step 2 ---Attach the Middle Leg (F)

Fix the middle leg (F) to the connect panel according to the diagram. Use the Allen wrench (6) to tighten all bolts (1) securely.

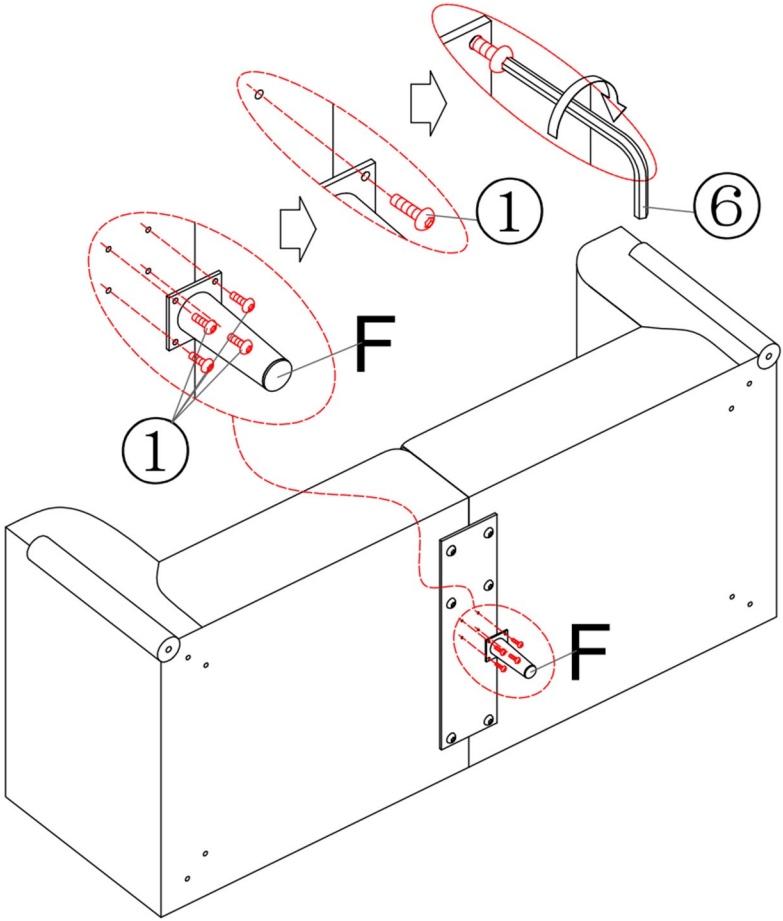

step 3 ---Install the Front & Rear Legs (C&D)

Insert the wood dowels (4) into the front legs (C). Position the front legs (C) onto the designated spots on the sofa frame, ensuring each dowel is inserted into the correct pre-drilled hole. Secure the rear legs (D) in place using the provided bolts (3) and Allen wrench (6).

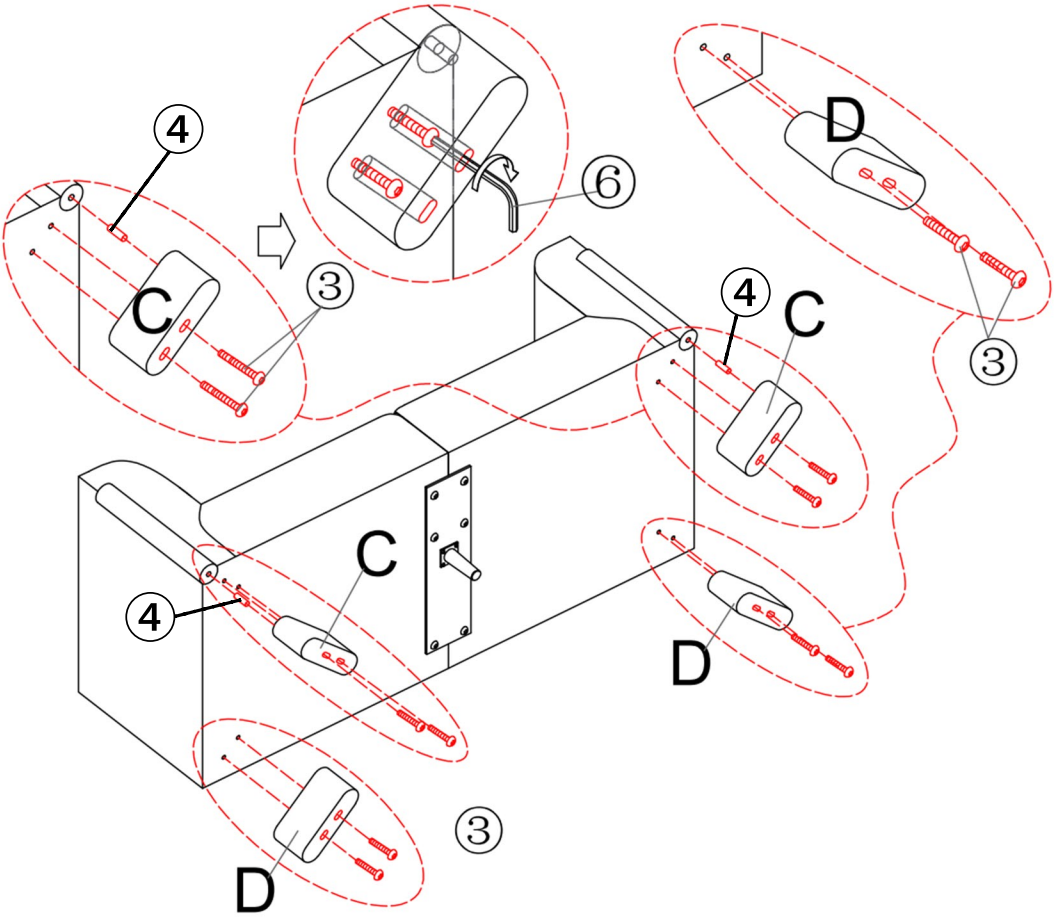

step 4 ---Place the back cushion (Gift)

The back cushion is gift.
Place the back cushion on it.

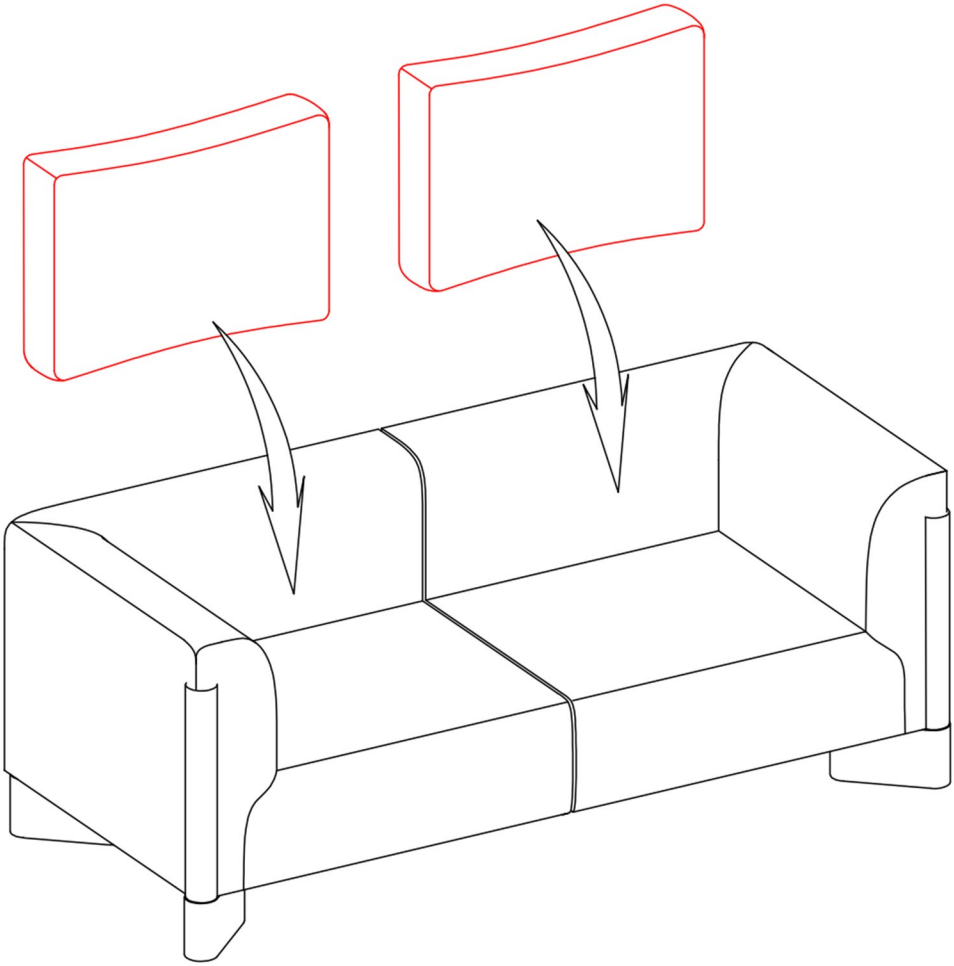

step 5 ---Assemble complete

Congradulations! You have finished the assembly, thank you again for choosing our product! Please enjoy!

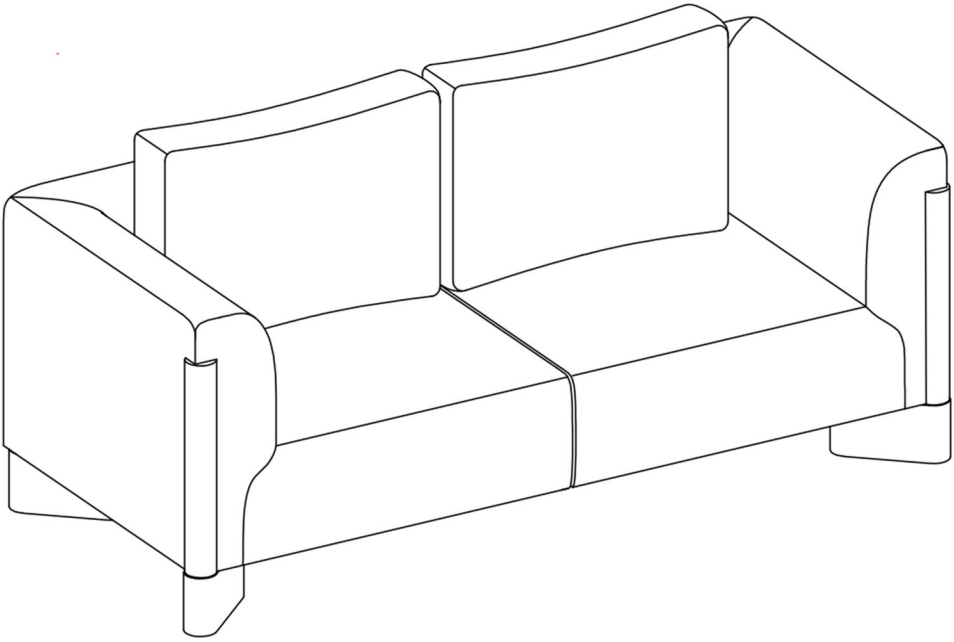

Come with multiple choices of upholsteries and colors.