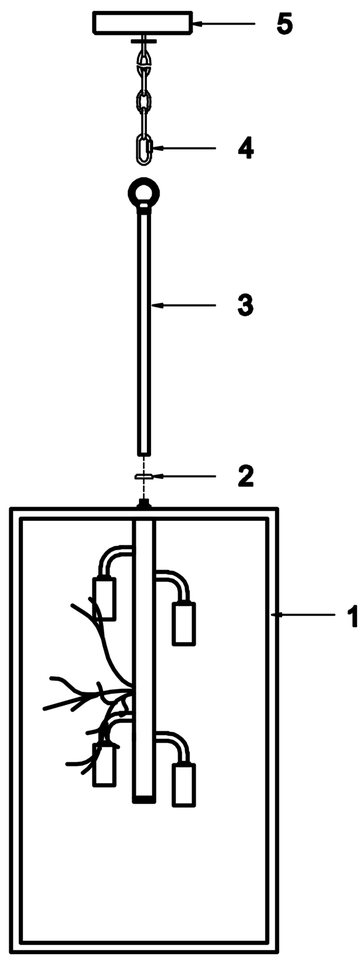

1.Put the (2) nut through the tooth tube, twist the straight rod (3) on the lamp body (1), and then connect the lamp body with the canopy (5) with the lock buckle (4).

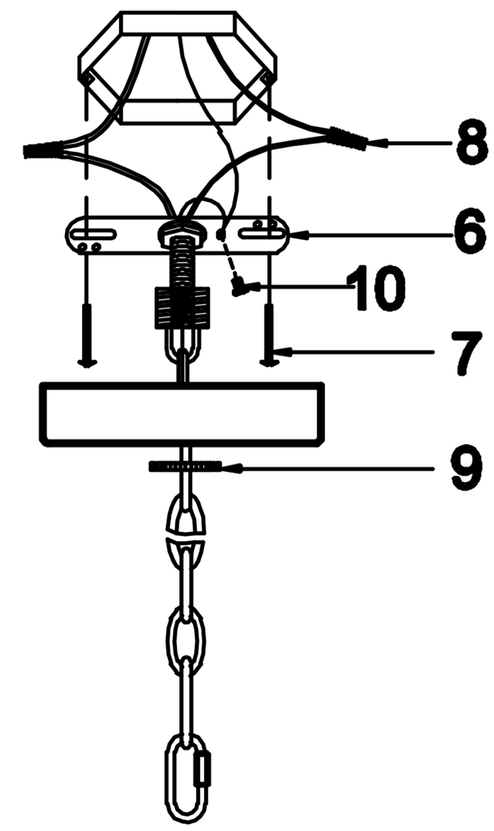

2. Install the mounting plate on the junction box with the mounting plate (6) and screw (7).
3. Connect the upper outlet of the junction box with the wire of light with the wiring cap (8).
4. Use an aluminum ring (9) to tighten the mounting plate and the canopy.

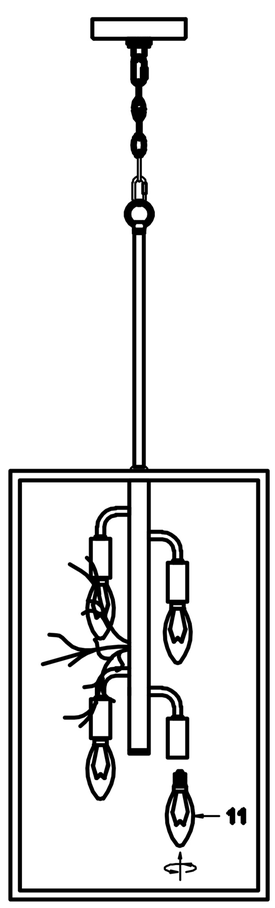

5.Install the light bulbs(Not included).

Accessories:

1:Light Frame*1	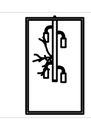
2:Nut*1	
3:Rod*1	
4:Buckle*1	
5:Canopy+Chain*1	
6:Mounting Plate*1	
7:Screws*2	
8:Wiring Cap*3	
9:Aluminum Ring*1	
10:Screws*1	

Notice: This light fixture should be installed in accordance with all applicable,local installation codes, and by a person familiar with the construction and operation of it, as well as the hazards involved. Inspect items and contents carefully. If any damage or defect is found, do not install it.