Transforming houses into homes (English & Español)

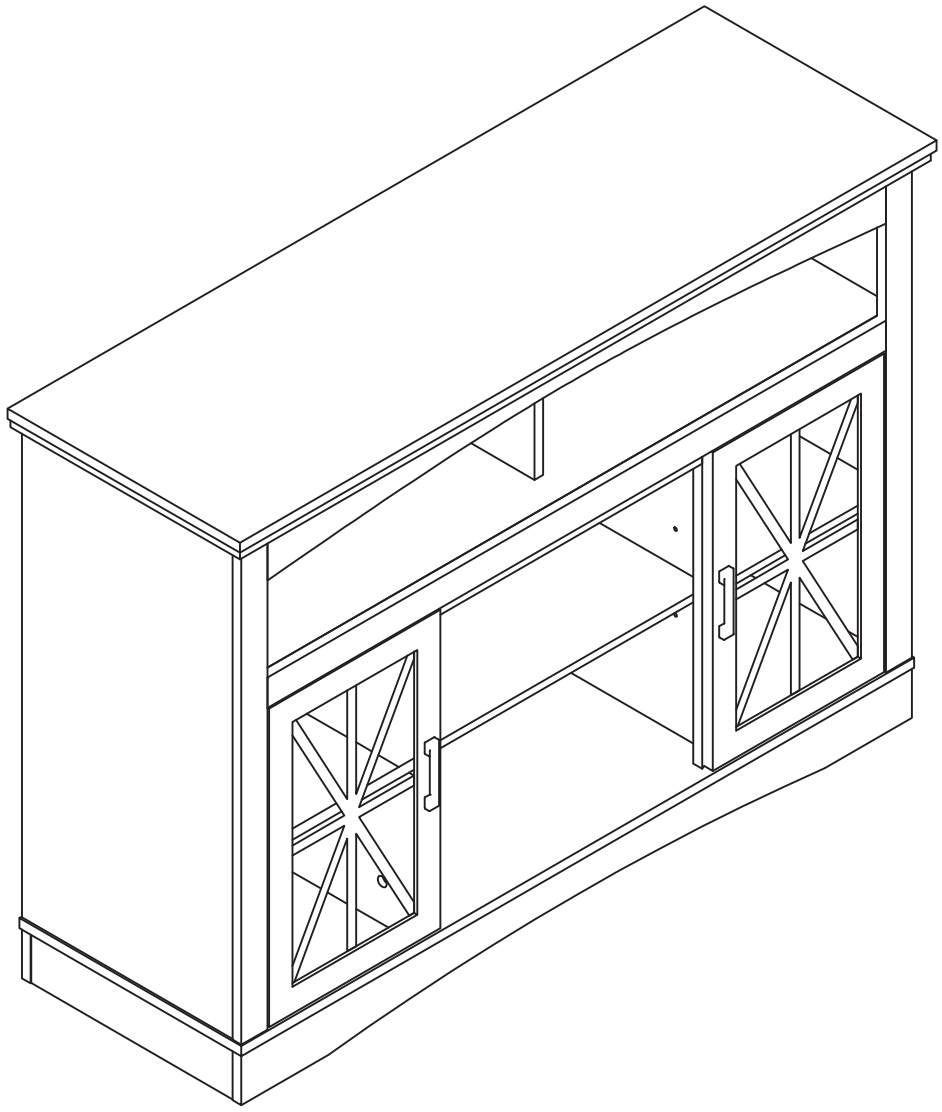

INSTRUCTION MANUAL

Contact Information

Question about your product? We're here to help. Contact us by:


Orders FAQ


Product Assembly


Product Inquiry


Chat Support


Returns & Refunds

If you have any problems, please send your order number and photos to us.
We will contact you within 24 hours and provide you with a satisfactory solution.

NOTICE **Please retain these instructions for future reference.**

- Carefully unpack all the components and verify that all the necessary parts are included as listed in the packaging.
- Identify each component and refer to the provided assembly diagram or step-by-step instructions.
- Assemble the furniture in the order specified to ensure proper alignment and fit.
- Use the provided tools or recommended tools for assembly. Do not use excessive force when tightening screws or bolts.
- If any difficulties arise during assembly. Consult the troubleshooting section or contact our customer support.

ASSEMBLY INSTRUCTIONS

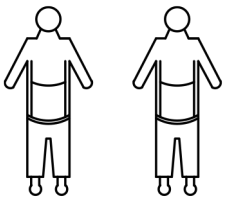

2 people

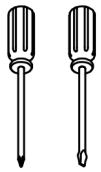

Phillips Screwdriver

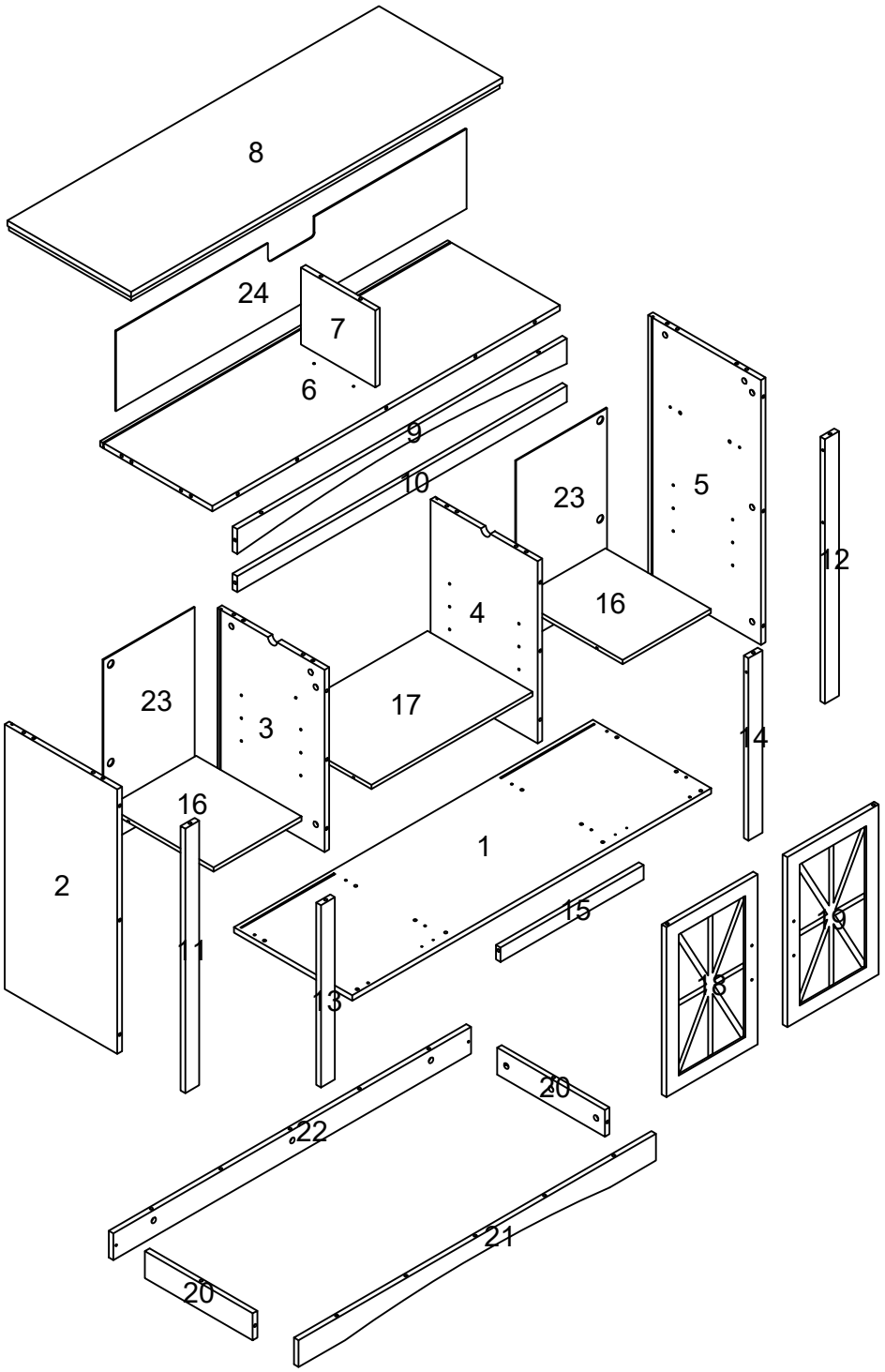

PARTS LIST

01 Bottom Panel

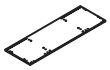

1 PC

02 Left Side Panel



1 PC

03 Left Middle Side Panel



1 PC

04 Right Middle Side Panel



1 PC

05 Right Side Panel



1 PC

06 Middle Top Panel

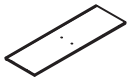

1 PC

07 Upper Middle Side Panel



1 PC

08 Top Panel



1 PCS

09 Front Irregular Upper Cross Bar



1 PCS

10 Front Middle Cross Bar



1 PCS

11 Front Left Vertical Bar



1 PC

12 Front Right Vertical Bar



1 PC

13 Left Middle Vertical Bar



1 PC

14 Right Middle Vertical Bar



1 PCS

15 Inner Cross Bar



1 PCS

16 Left and Right Adjustable Shelves



2 PCS

17 Middle Adjustable Shelf

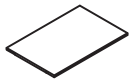

1 PC

18 Left Door Panel



1 PC

19 Right Door Panel



1 PC

20 Left and Right Base Feet

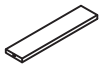

2 PCS

21 Front Feet



1 PC

22 Rear Feet



1 PC

23 Lower Back Panel

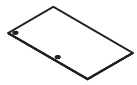

2 PCS

24 Upper Back Panel

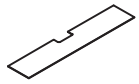

1 PC

HARDWARE LIST

A
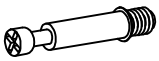
ϕ5*35mm
Cam Bolt
47+2 PCS

B

ϕ15*9mm
Cam Lock
47+2 PCS

C

ϕ8*30mm
Dowel
38+2 PCS

D

3x14mm
Screw
20+2 PCS

E

L-shaped Iron Sheet
2 PCS

F

4x40mm
Screw
8+2 PCS

G

Handle
4*20mm
2 PCS

H

Door Magnetic Latch
2 PCS

J

Door Shaft
4 PCS

K
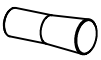
Shelf Support
12 PCS

L

Back Buckle
8 PCS

M
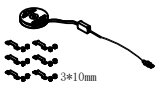
Light Belt
3*10mm
1PC

N

Hole Patch
47+2 PCS

O

Anti-Fall Strip
O-1
Large Flat Head Screw
O-2
2 PCS

P

Plastic Expansion
P-1
Self-Tapping Screw
P-2
2 PCS

If you are missing any parts, please provide your order number and circle the part number. Send us a photo of this, and we will provide you with a satisfactory solution. Thank you.

STEP 1

Please tighten the screws after completing all installation.

Por favor, apriete los tornillos despu?s de instalar todo.

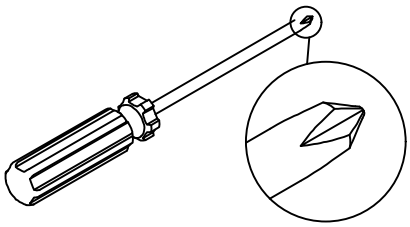

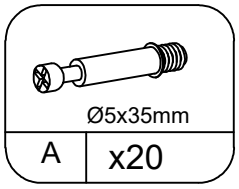

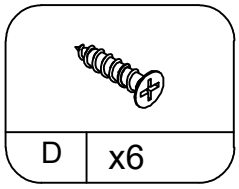

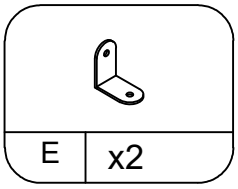

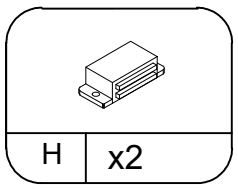

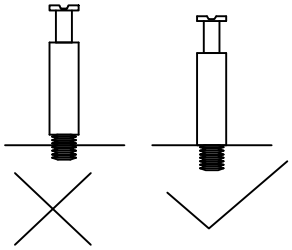

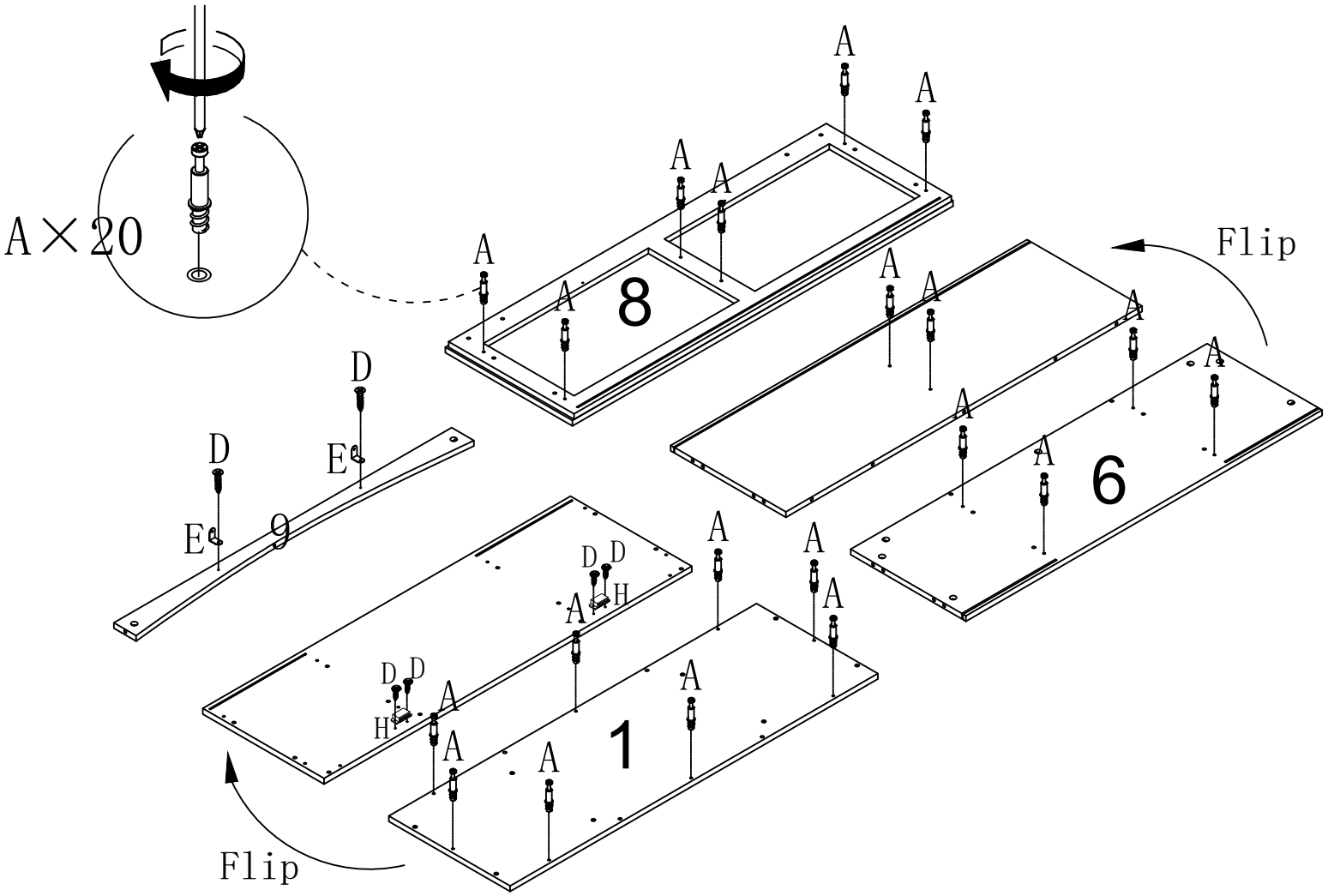

STEP 2

Please tighten the screws after completing all installation.

Por favor, apriete los tornillos despu?s de instalar todo.

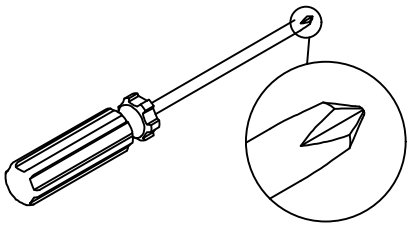

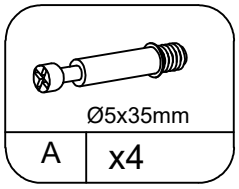

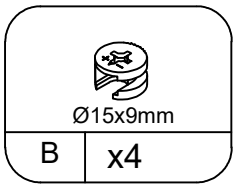

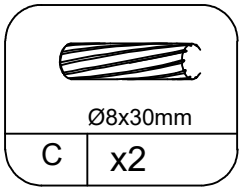

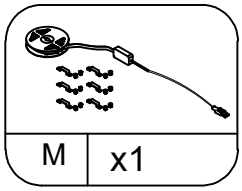

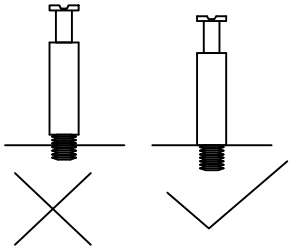

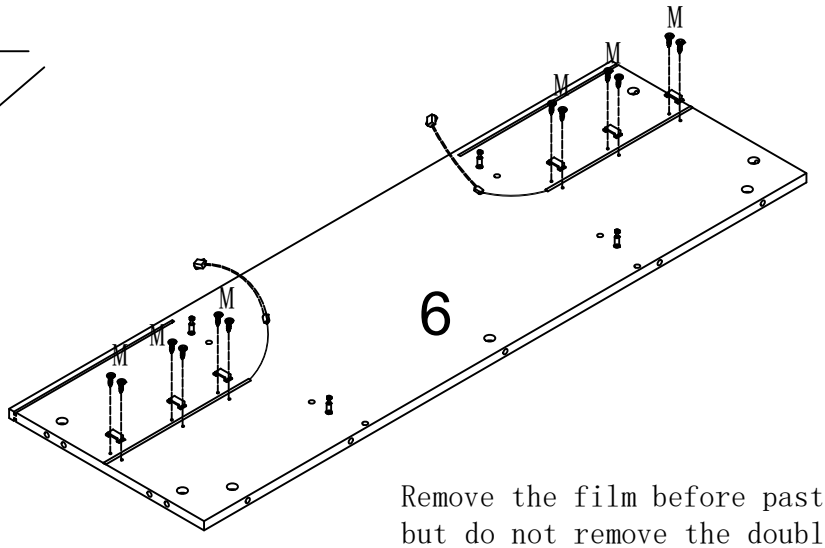

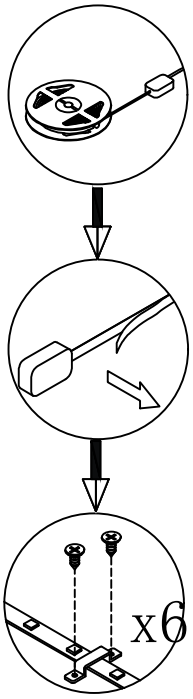

Remove the film before pasting, but do not remove the double-sided sticky tape together!

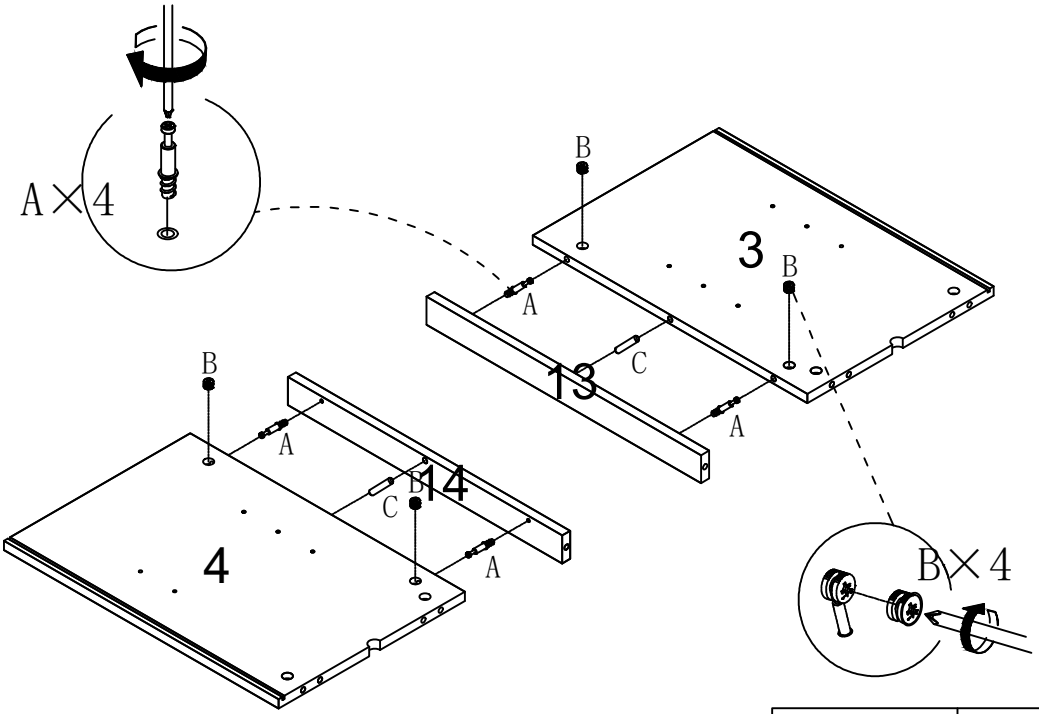

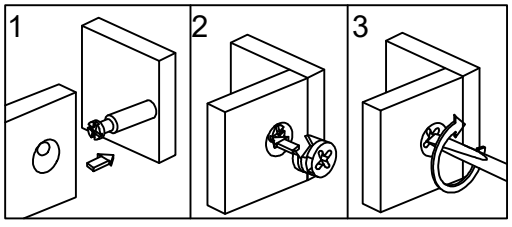

STEP 3

Please tighten the screws after completing all installation.

Por favor, apriete los tornillos despu?s de instalar todo.

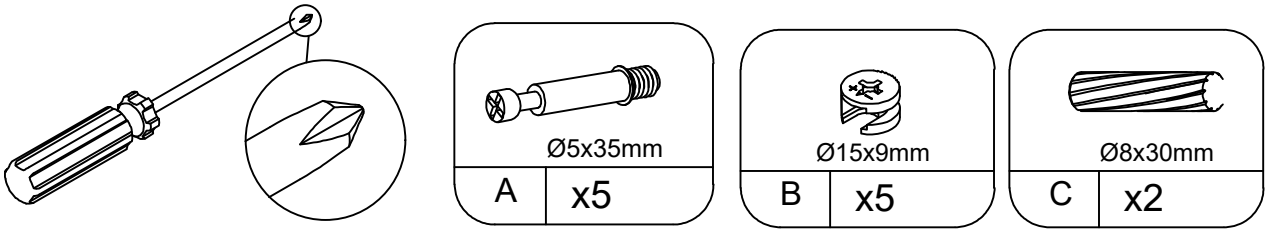

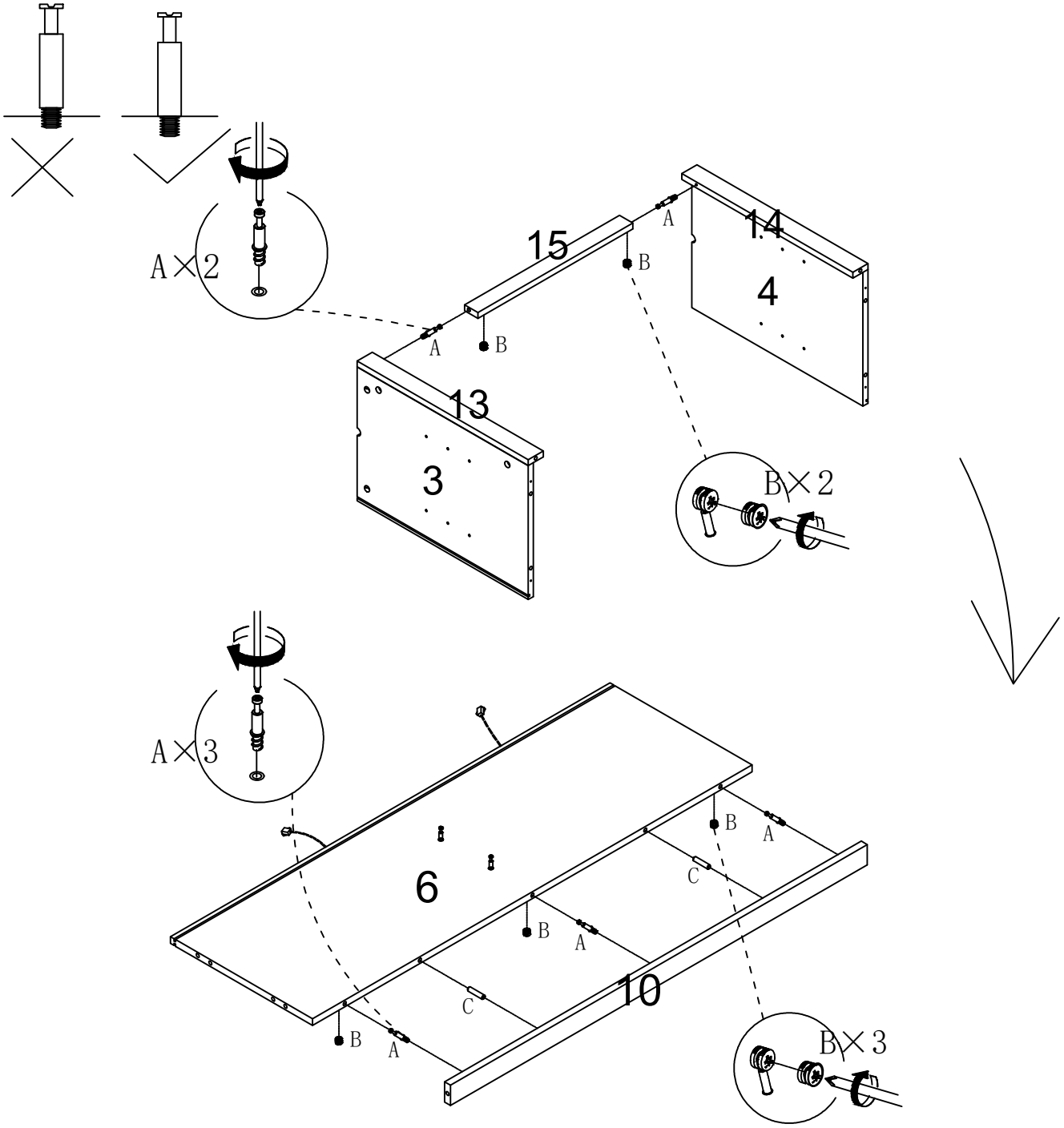

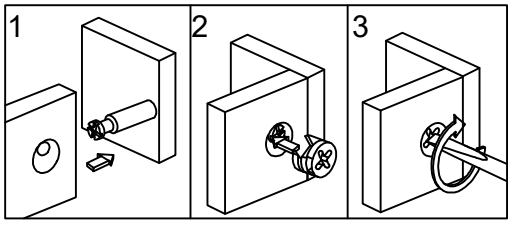

STEP 4

Please tighten the screws after completing all installation.

Por favor, apriete los tornillos despu?s de instalar todo.

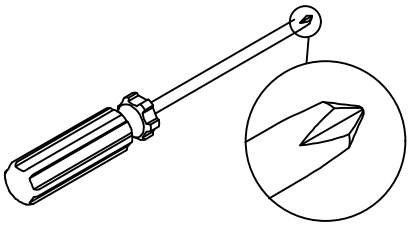

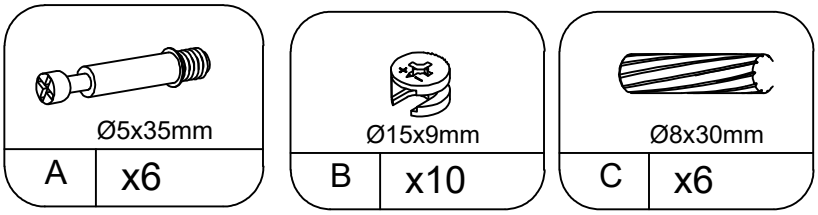

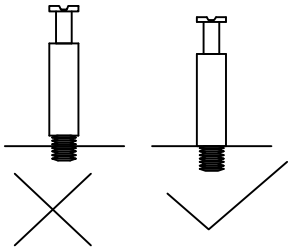

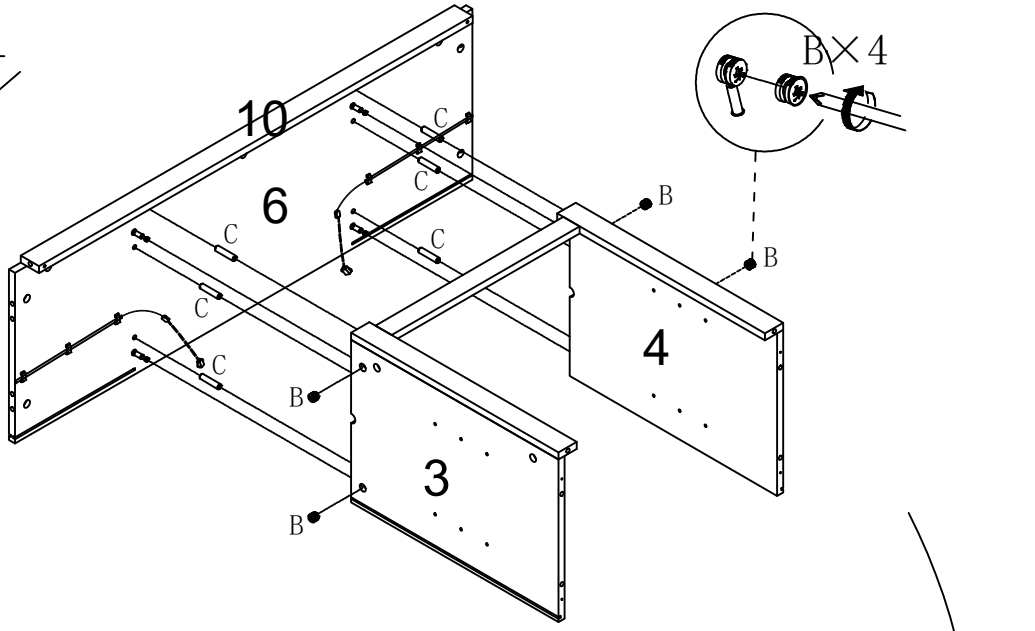

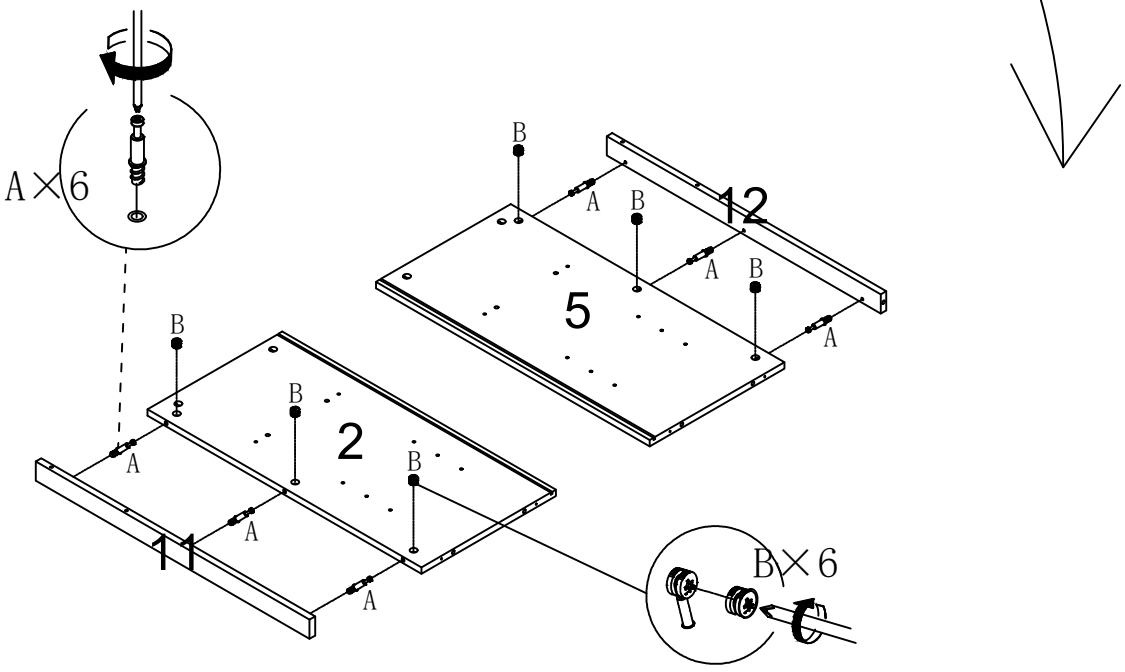

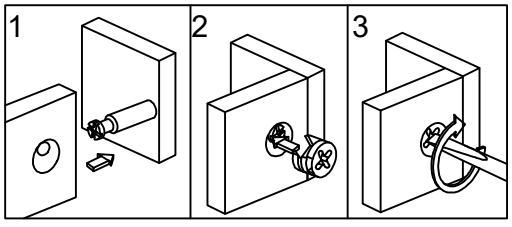

STEP 5

Please tighten the screws after completing all installation.

Por favor, apriete los tornillos despu?s de instalar todo.

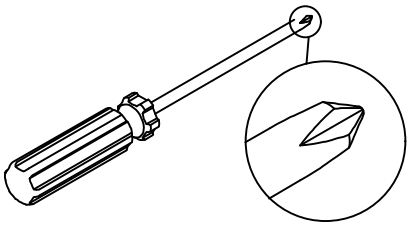

Ø5x35mm	Ø15x9mm	Ø8x30mm
A x8	B x8	C x4

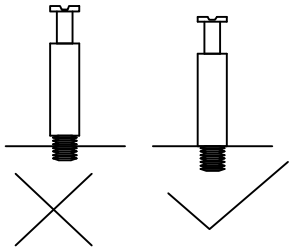

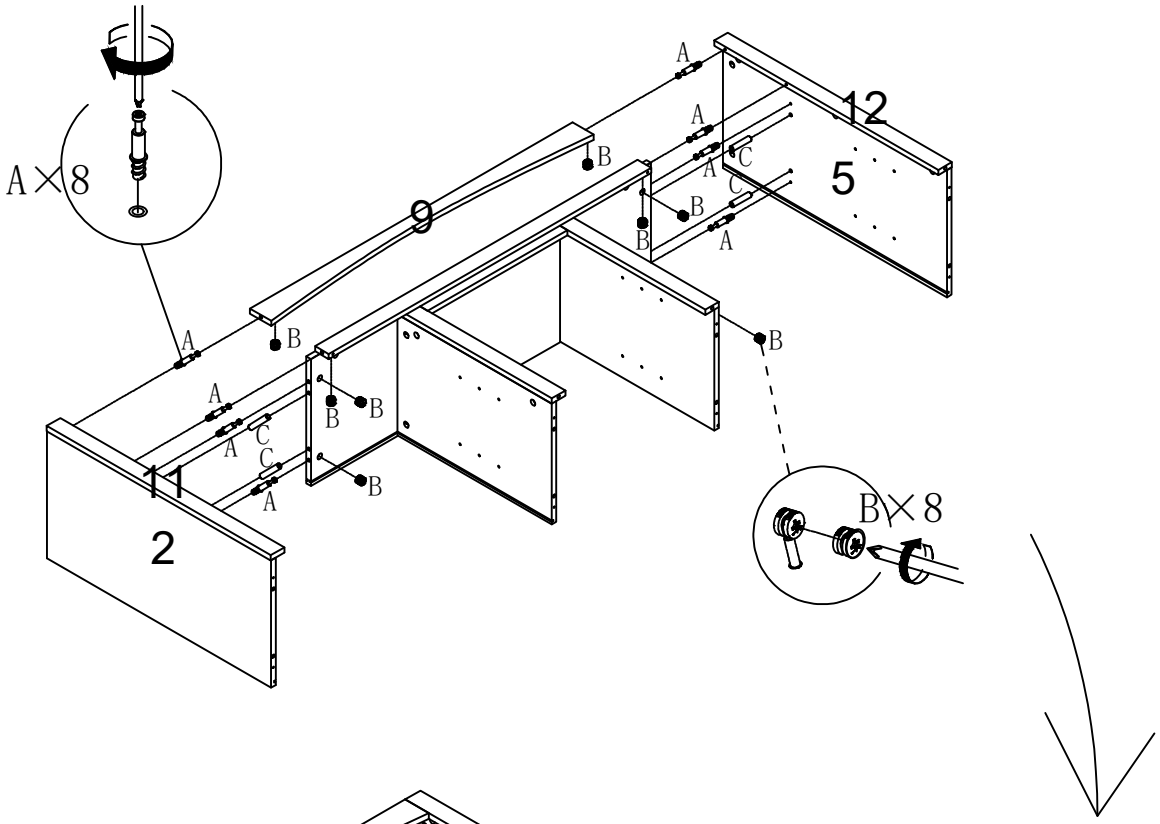

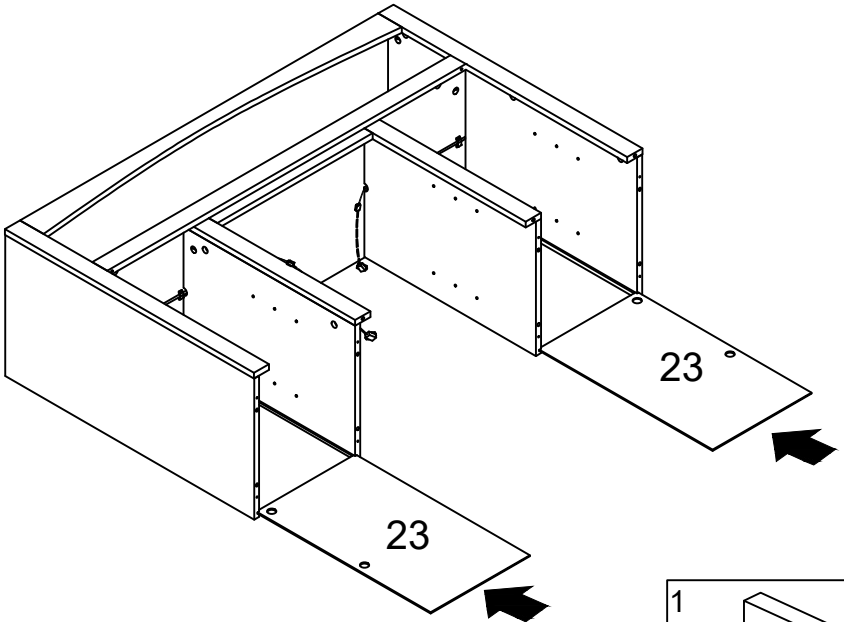

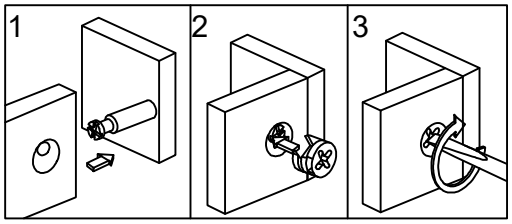

STEP 6

Please tighten the screws after completing all installation.

Por favor, apriete los tornillos despu?s de instalar todo.

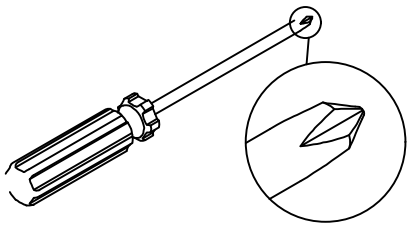

Ø5x35mm	Ø15x9mm	Ø8x30mm	Ø4x40mm
A x4	B x4	C x12	F x8

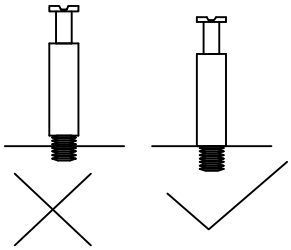

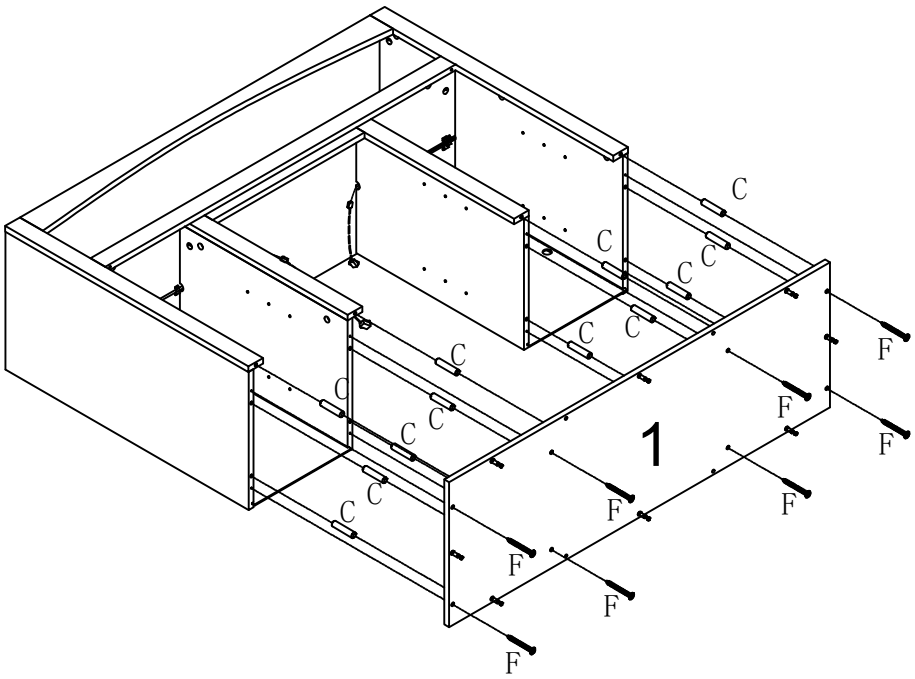

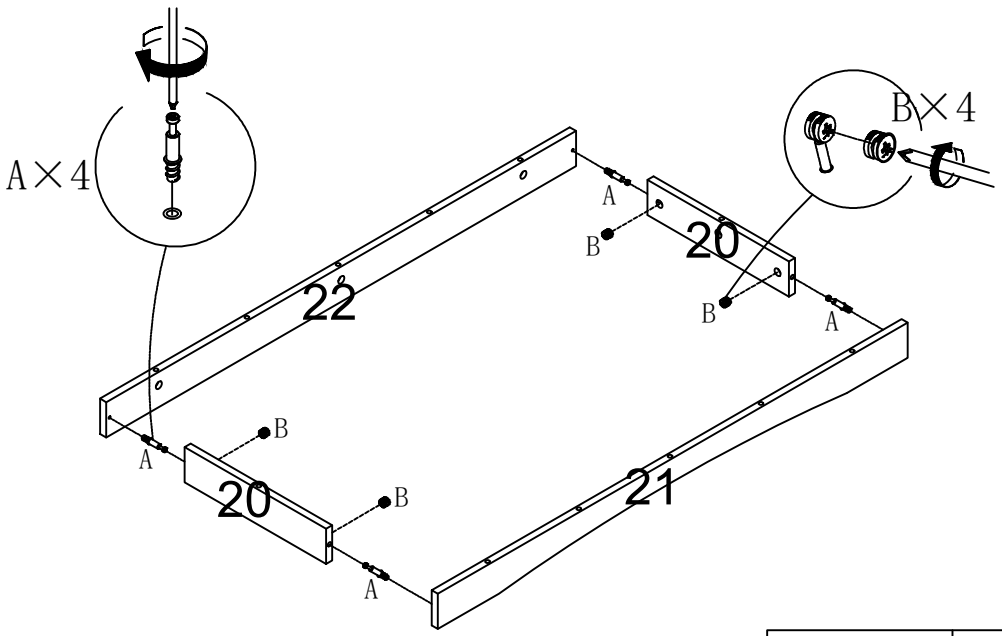

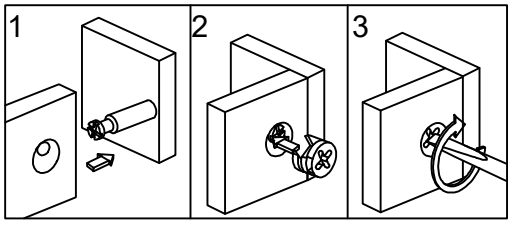

STEP 7

Please tighten the screws after completing all installation.

Por favor, apriete los tornillos despu?s de instalar todo.

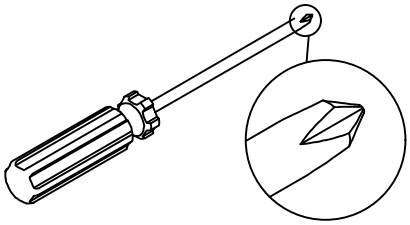

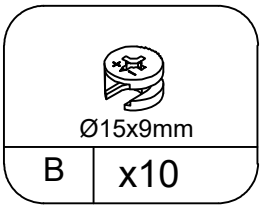

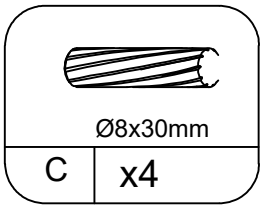

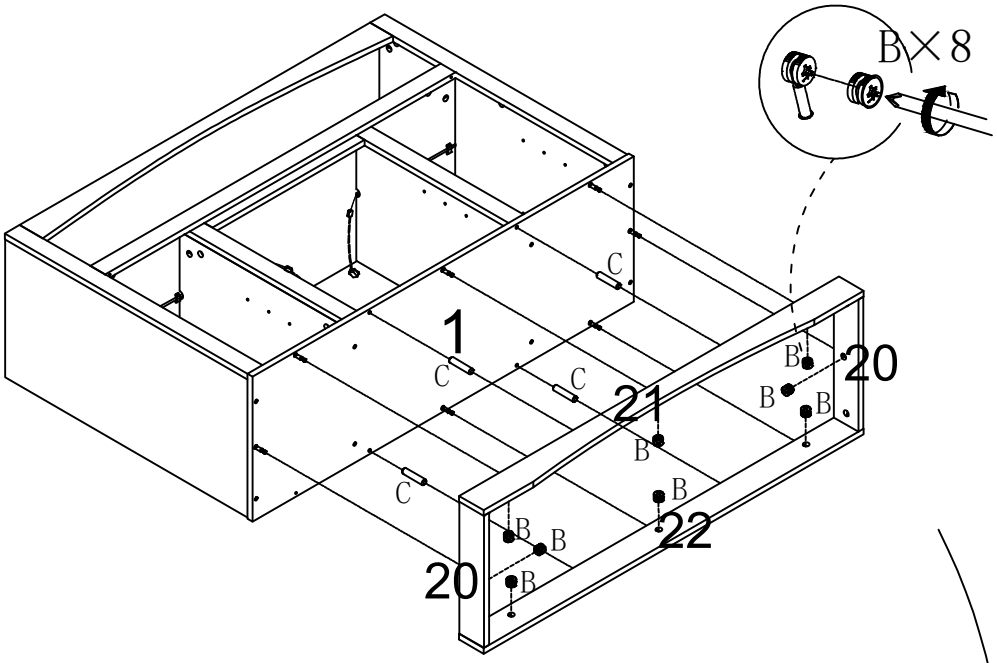

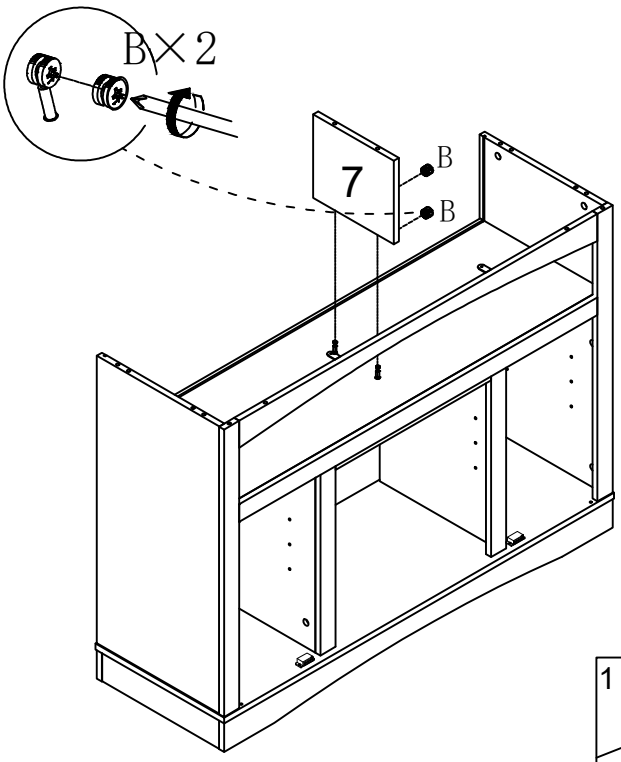

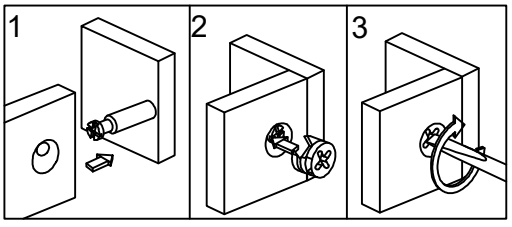

STEP 8

Please tighten the screws after completing all installation.

Por favor, apriete los tornillos despu?s de instalar todo.

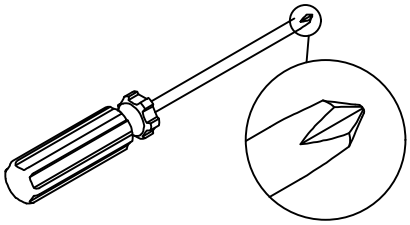

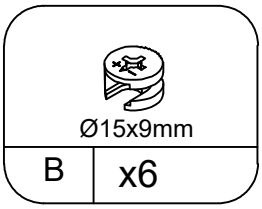

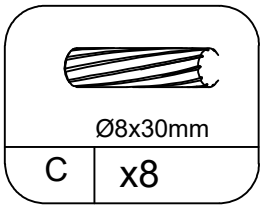

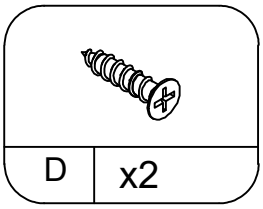

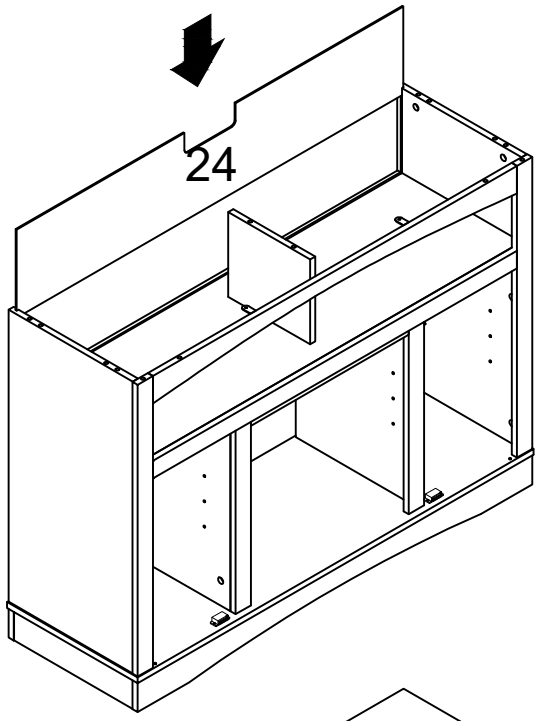

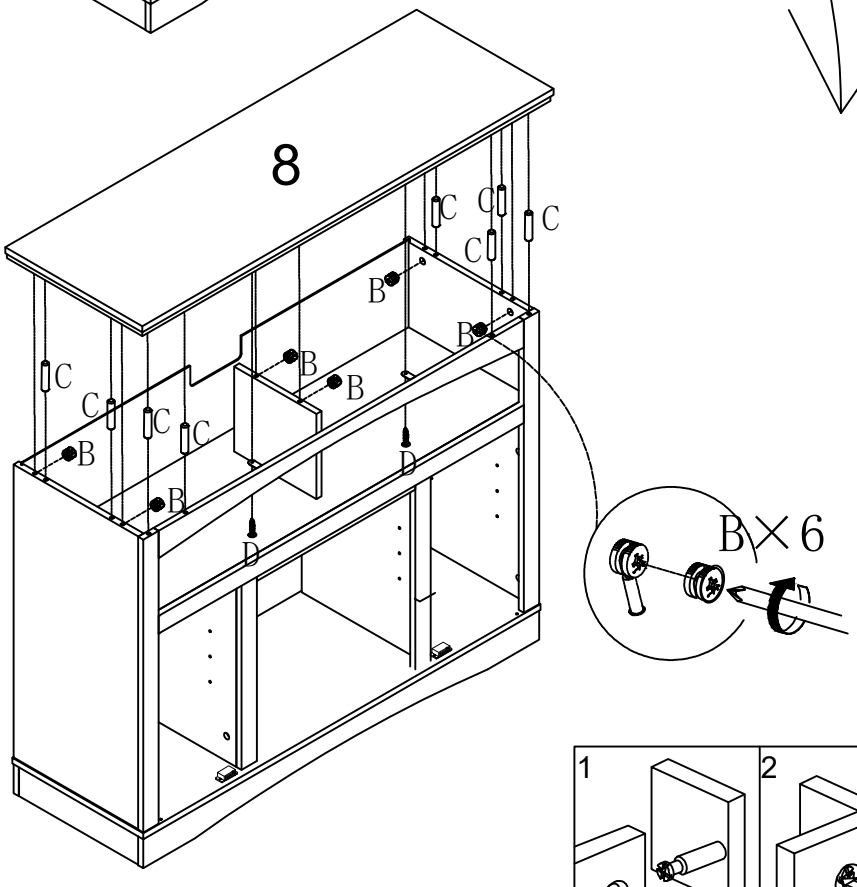

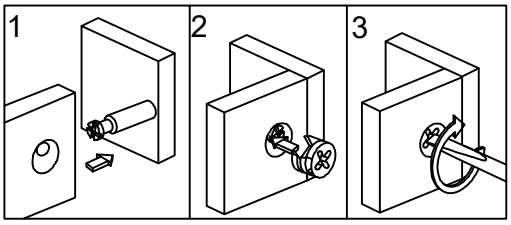

STEP 9

Please tighten the screws after completing all installation.

Por favor, apriete los tornillos despu?s de instalar todo.

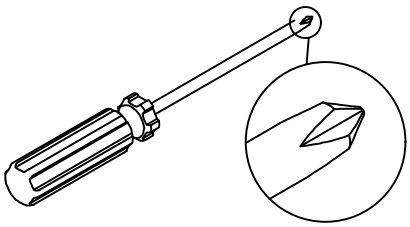

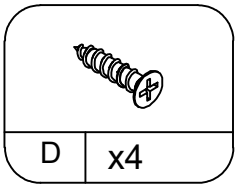

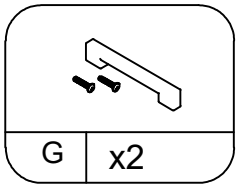

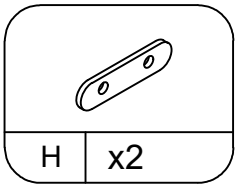

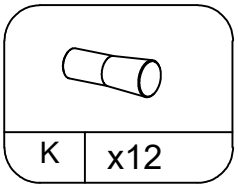

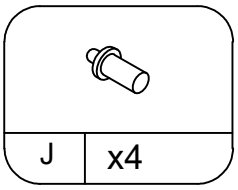

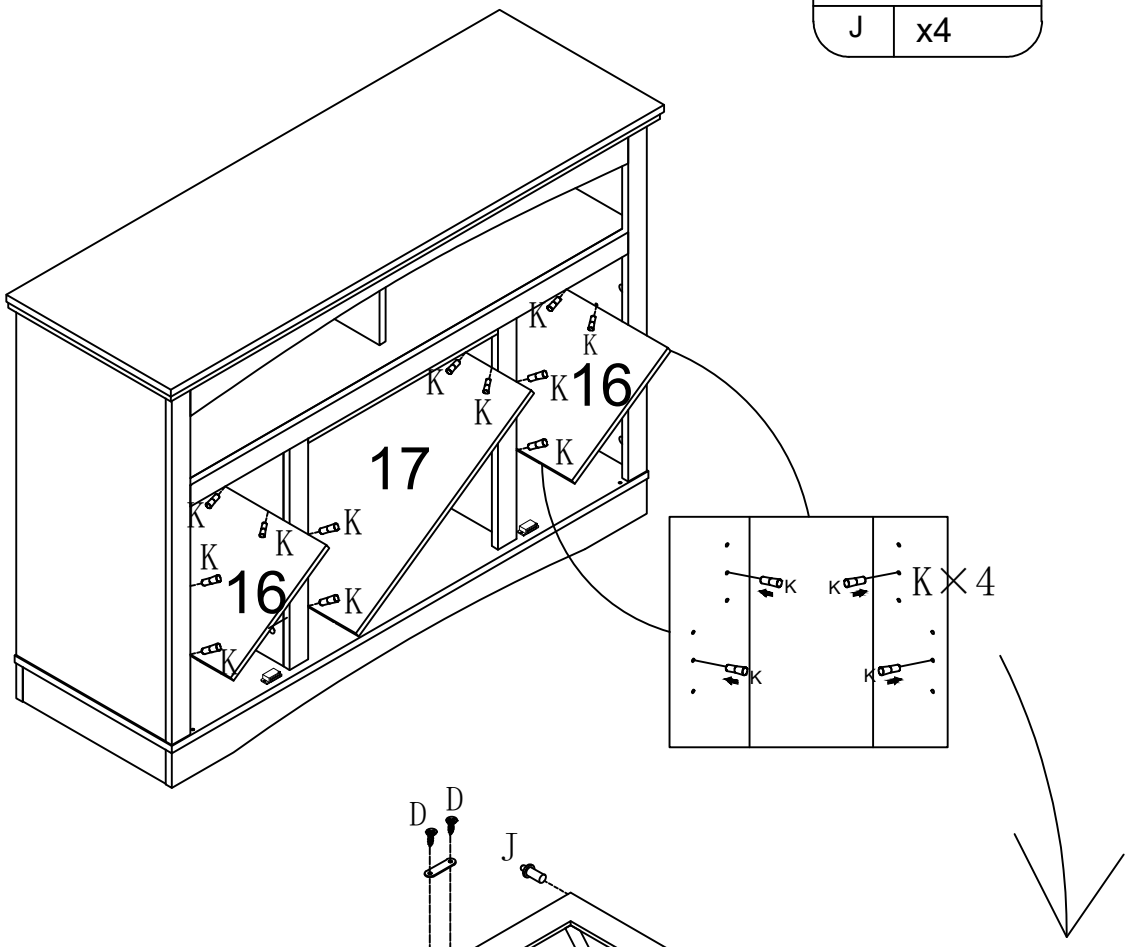

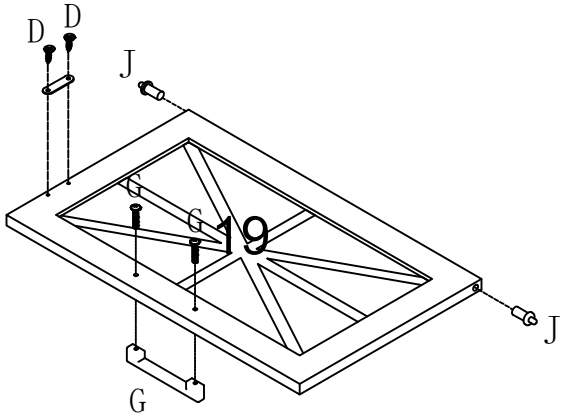

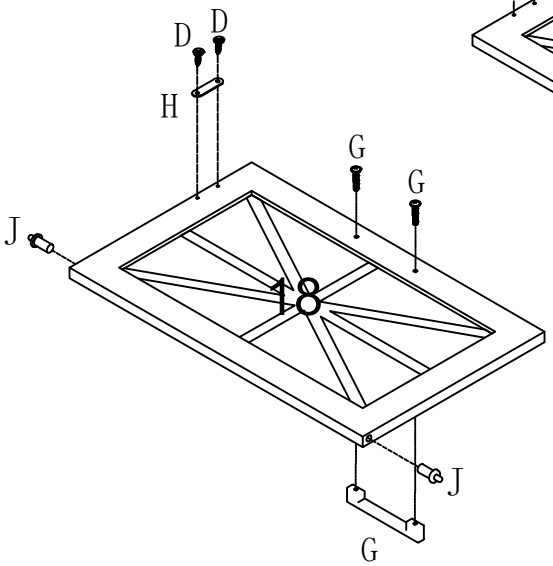

STEP 10

Please tighten the screws after completing all installation.

Por favor, apriete los tornillos despu?s de instalar todo.

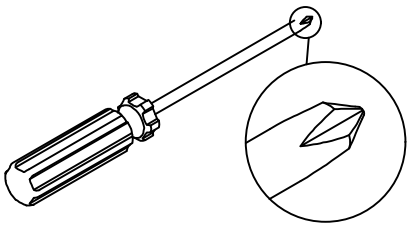

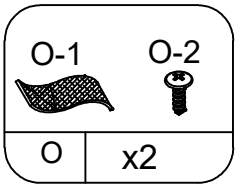

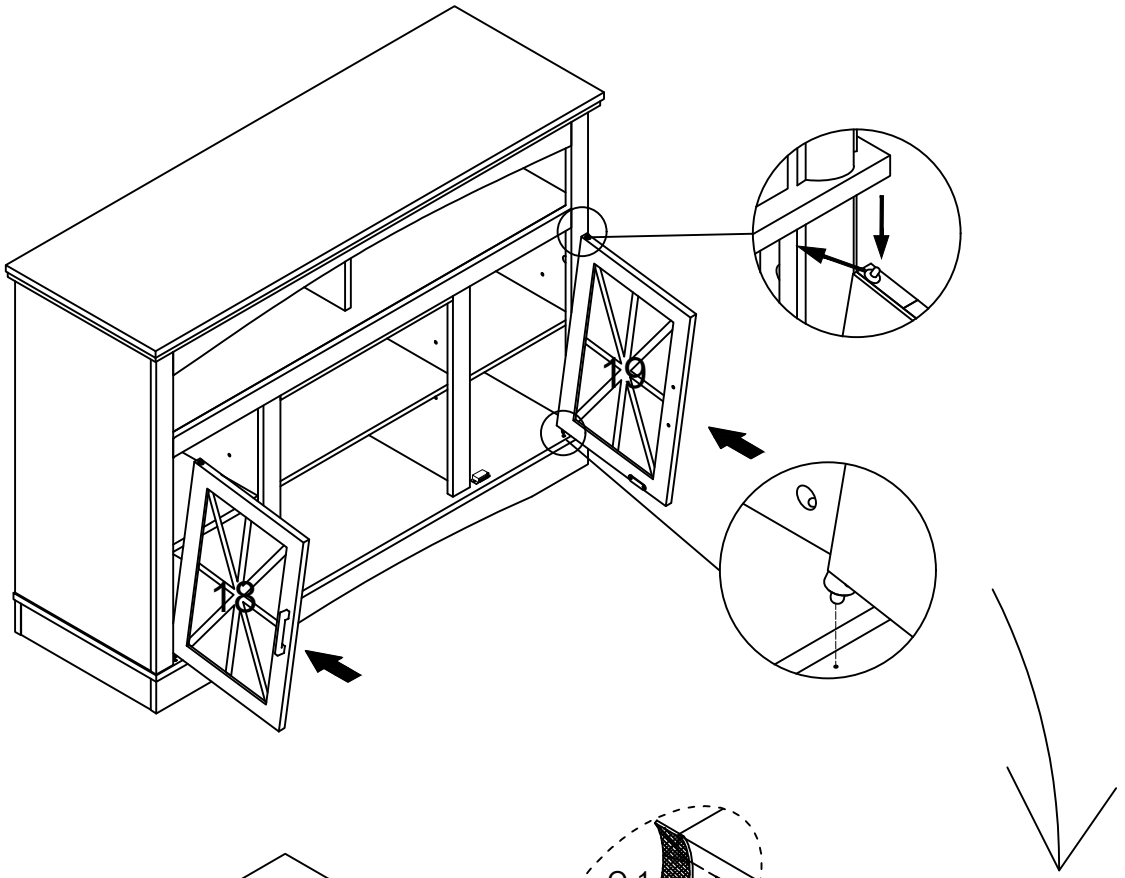

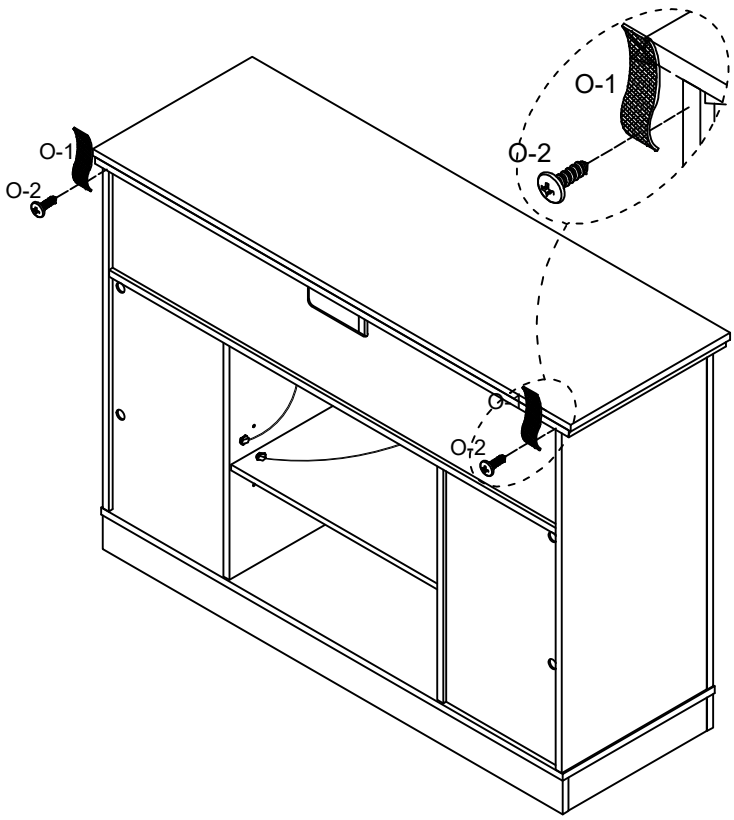

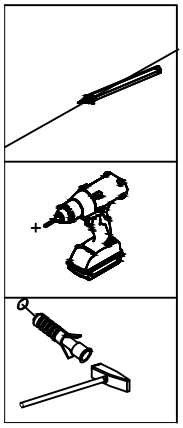

STEP 11

Please tighten the screws after completing all installation.

Por favor, apriete los tornillos despu?s de instalar todo.

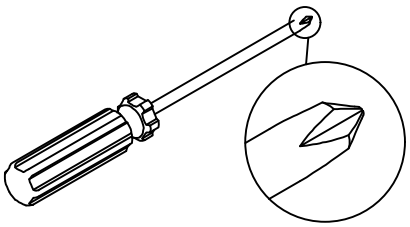

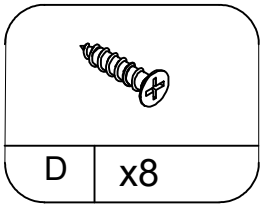

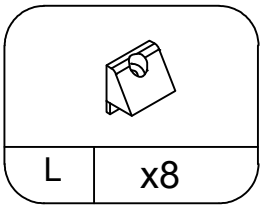

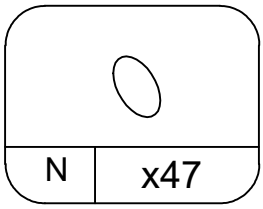

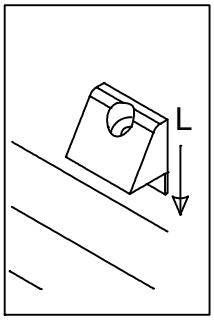

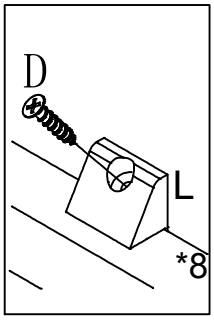

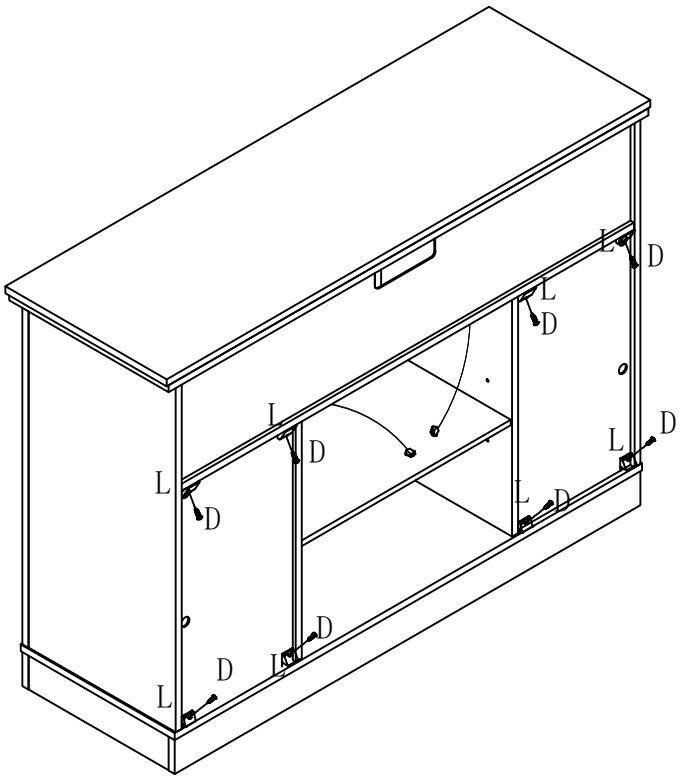



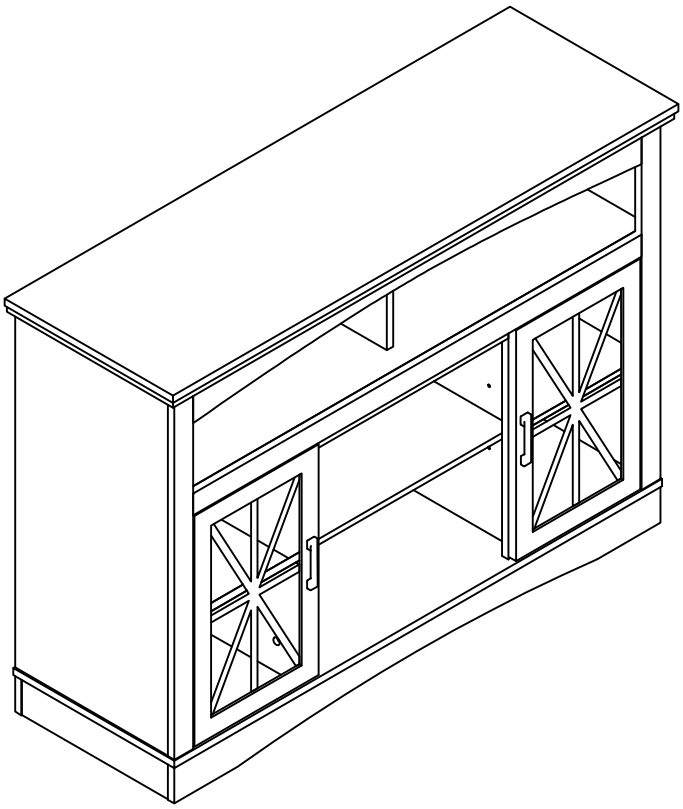

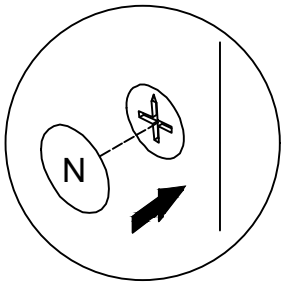

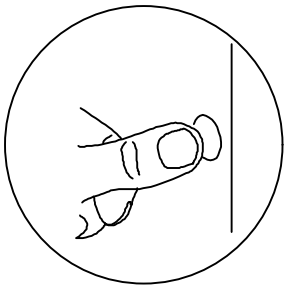

STEP 12

Please tighten the screws after completing all installation.

Por favor, apriete los tornillos despu?s de instalar todo.

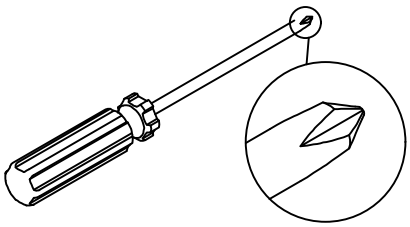

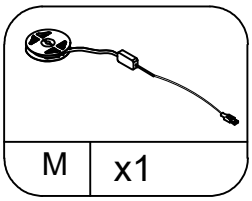

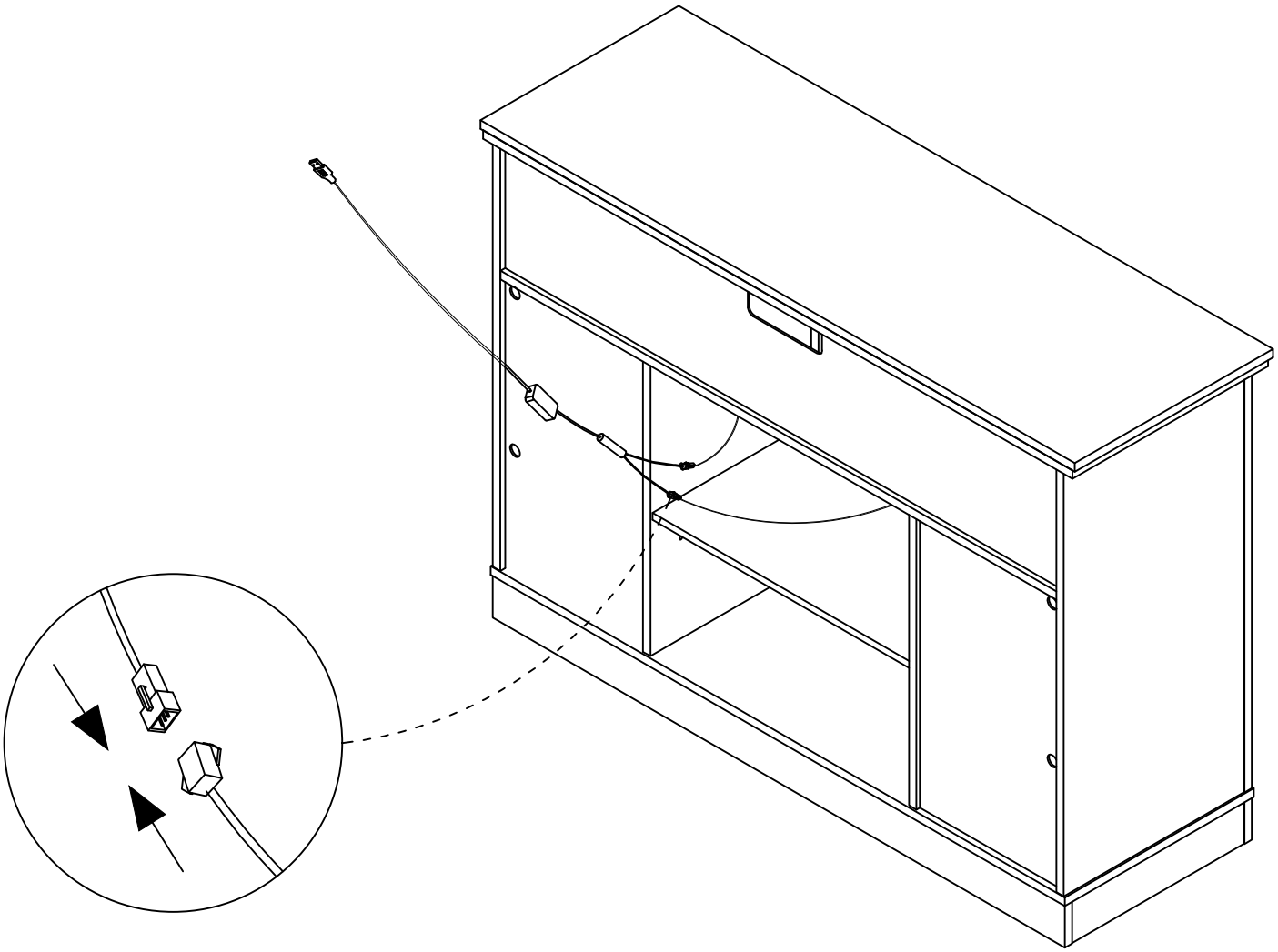

STEP 13

Please tighten the screws after completing all installation.

Por favor, apriete los tornillos despu?s de instalar todo.

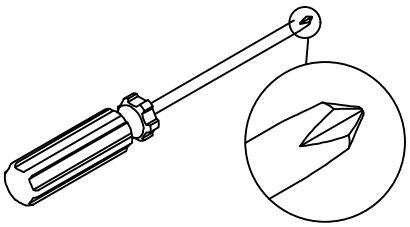

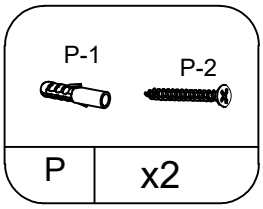

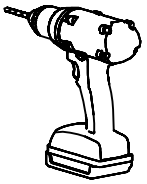

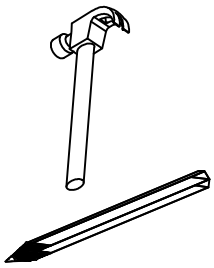

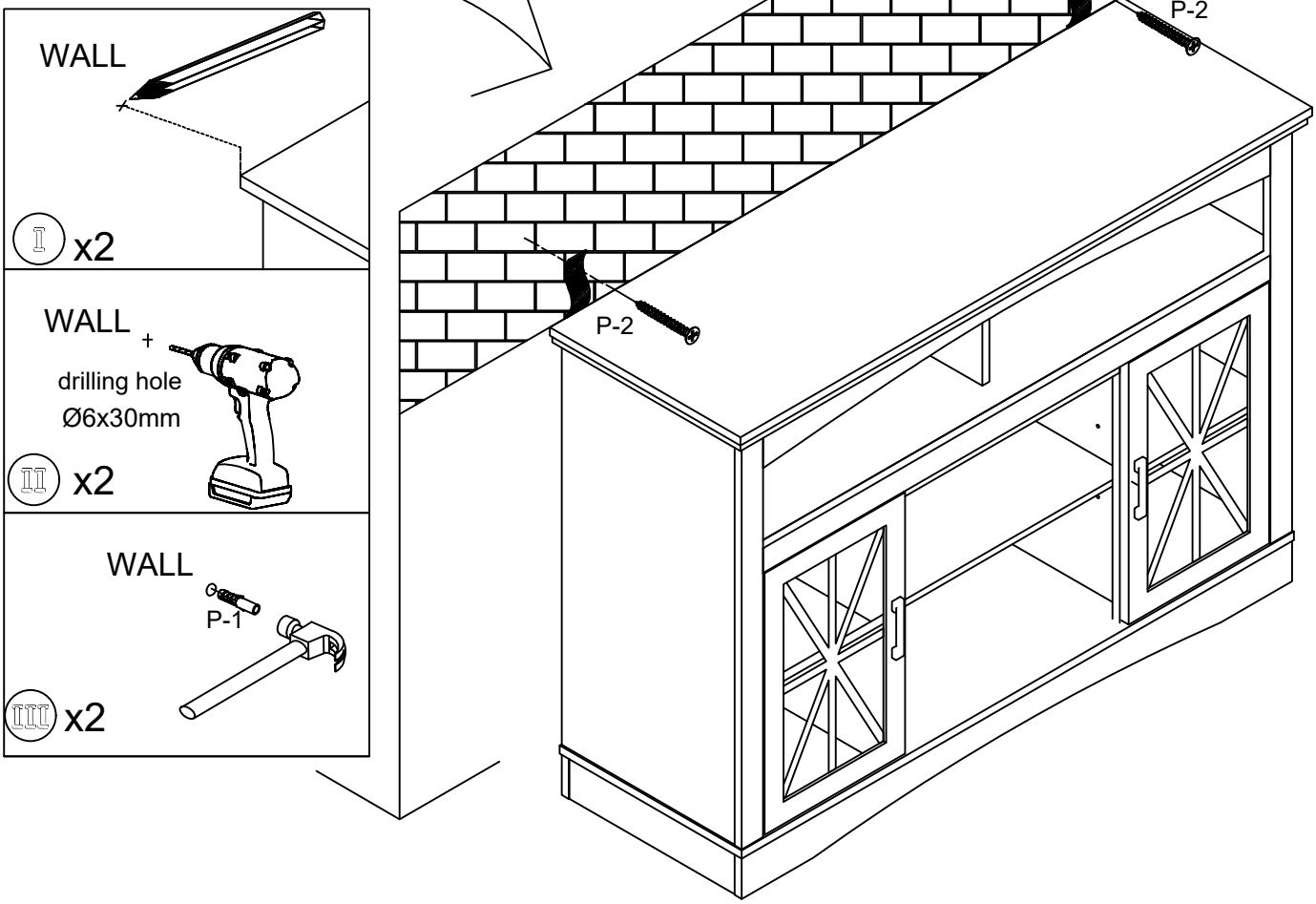

MAINTENANCE AND CARE

Prevent Moisture Damage:

Safeguard your laminate furniture by keeping it in a dry environment. Store the furniture away from damp areas and water sources.

Sunlight Shielding:

Shield your laminate furniture from direct sunlight to prevent color fading and surface deterioration. Consider using curtains or blinds for protection, especially if direct sunlight exposure is unavoidable.

Regular Care:

Maintain your laminate furniture's appearance by gently wiping surfaces with a damp cloth. Avoid using overly wet cloths or abrasive cleaning tools.

Avoid Scratches:

Protect the furniture surface from scratches by refraining from placing sharp or hard objects on it. When moving the furniture, be cautious not to scrape the legs against the floor.

Proper Weight Distribution:

Prevent structural damage by placing heavy objects on stable support surfaces rather than directly on the laminate furniture's surface. This simple step can prolong the life of your furniture.

MANTENIMIENTO Y CUIDADO

Evite daños por humedad:

Proteja sus muebles laminados manteniéndolos en un ambiente seco. Guarde los muebles lejos de zonas húmedas y fuentes de agua.

Protéjalos de la luz solar:

Proteja sus muebles laminados de la luz solar directa para evitar la pérdida de color y el deterioro de la superficie. Considere el uso de cortinas o persianas como protección, especialmente si la exposición directa a la luz solar es inevitable.

Cuidado regular:

Mantenga el aspecto de sus muebles laminados limpiando suavemente las superficies con un paño húmedo. Evite utilizar paños demasiado húmedos o herramientas de limpieza abrasivas.

Evite los arañazos:

Proteja la superficie del mueble de arañazos evitando colocar objetos afilados o duros sobre ella. Al mover el mueble, tenga cuidado de no raspar las patas contra el suelo.

Distribución adecuada del peso:

Evite daños estructurales colocando objetos pesados sobre superficies de apoyo estables en lugar de directamente sobre la superficie del mueble laminado. Este sencillo paso puede prolongar la vida de sus muebles.

WARRANTY INFORMATION

Warranty Coverage: Our warranty provides protection against manufacturing defects in materials and workmanship for a specified period from the date of purchase, as outlined in the accompanying warranty documentation.

Exclusions: The warranty does not cover damages resulting from misuse, negligence, accidents, normal wear and tear, unauthorized repairs or modifications, improrer assembly, or failure to adhere to the care and maintenance guidelines provided.

WARRANTY CLAIM PROCESS

To initiate a return , please follow these steps:

1. Log into your go to the "Your Orders" section.
2. Locate the order containing the item you wish to return.
3. Contact our customer service for a ssistance in obtaining a prepaid return label.
4. Once you receive the return label, securely affix it to the package.
5. You can then choose to drop off the package at a designated carrier location or arrange for a pickup.
6. After we receive and inspect the returned product, we will initiate the refund process.
7. The refund will be credited back to the original payment method used during the purchase.
8. Typically, refunds are processed within 3-5 business days.

INFORMACIÓN SOBRE LA GARANTÍA

Cobertura de la garantía: Nuestra garantía proporciona protección contra defectos de fabricación en materiales y mano de obra durante un período determinado a partir de la fecha de compra, como se indica en la documentación de garantía adjunta.

Exclusiones: La garantía no cubre los daños resultantes de uso indebido, negligencia, accidentes, desgaste normal, reparaciones o modificaciones no autorizadas, montaje incorrecto o incumplimiento de las directrices de cuidado y mantenimiento proporcionadas. las directrices de cuidado y mantenimien to proporcionadas.

PROCESO DE RECLAMACIÓN DE LA GARANTÍA

1. Accede a tu cuenta de yve a la seccion "Tus pedidos".
2. Localiza el pedido que contiene el articulo que deseas devolver.
3. Ponte en contacto con nuestro servicio de atencion al cliente para quete ayuden a obtener una etiqueta de devolucion prepagada.
4. Una vez que reciba la etiqueta de devolucion, fljela firmemente alpaquete.
5. A continuacion, puede optar por depositar el paquete en ellugardesignado por el transportistao solicitar que lo recojan.
6. Después de que recibamos e inspeccionemos el producto devuelto,iniciaremos e l proceso de reembolso.
7. El reembolso se abonar de nuevo al método de pago original utiliza-do durante l a compra.
8. Normalmente, los reembolsos se procesan en un plazo de 3 a 5 diaslaborables.