TUCSON

Model # 65411B

Wooden Swing Set

Owner's Manual & Assembly Instructions

MANUFACTURED BY:
Backyard Discovery
3305 Airport Drive
Pittsburg, KS 66762
800-856-4445

WARNING: FOR DOMESTIC USE ONLY.

average 2 person assembly time

assembly time may vary based on skill level

For the most up to date assembly manual,
to register your set, or to order replacement parts please visit
www.backyarddiscovery.com

SAVE THIS ASSEMBLY MANUAL FOR FUTURE REFERENCE IN THE EVENT THAT YOU NEED TO ORDER REPLACEMENT PARTS.

Para obtener instrucciones en español, visite www.backyarddiscovery.com

Made in China | INS-65411B-TUCSON SWING SET-ENG 8-17-23

Place the set on level ground, not less than 6'-7" [2 m] from any structure or obstruction such as a fence, garage, house, overhanging branches, laundry lines, or electrical wires.

- While assembling unit, take time before and after each phase to make sure fort is level. If fort is not level, assembly will be difficult and improper assembly may result. Extra care must be taken to insure the fort is square.
- The safe play area refers to a zone extending 6'-7" (2 m) beyond the play product on all sides, including the space above the play product.

SAFE PLAY AREA DIAGRAM

Ground Dimension

17' - 10 5/8" (5.5 m) x 7' - 3 3/4" (2.2 m) x 9' - 5" (2.9 m)

Safe Play Area

31' - 5/8" (9.5 m) x 20' - 5 3/4" (6.2 m) x 16' - 0" (4.9 m)

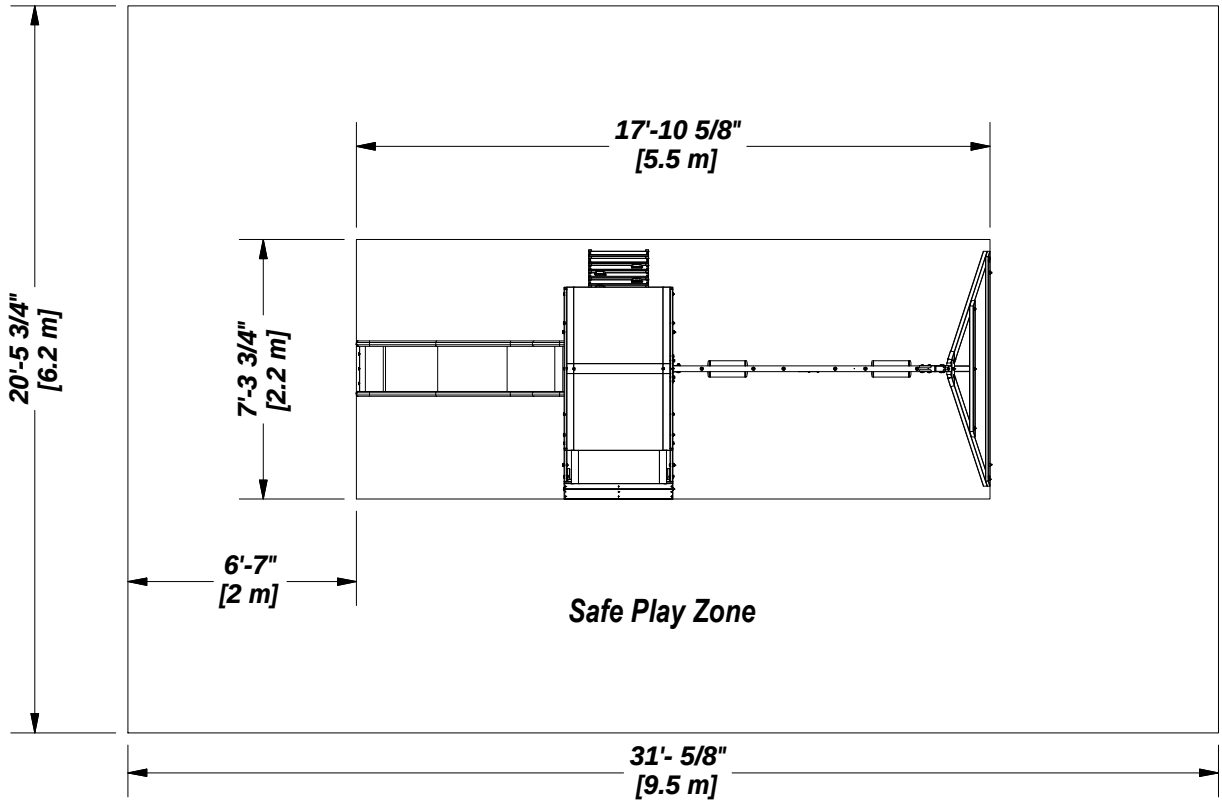

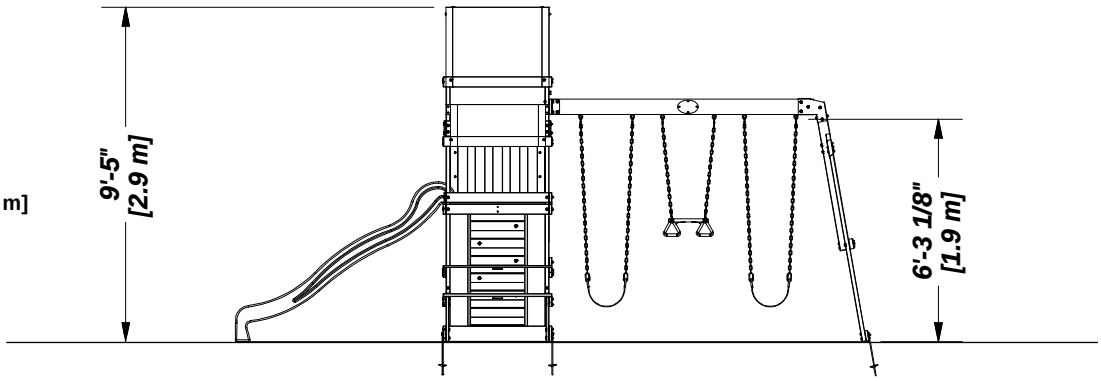

SAFE PLAY HEIGHT: 16'-0" [4.9 m]
MAXIMUM FALL HEIGHT: 6'-3 1/8" [1.9 m]

General Information:

Your set has been designed and engineered for children only and for residential use only.
A maximum of 150 lbs. per child is recommended for play activities designed for individual use.
A maximum of 120 lbs. per child is recommended for play activities designed for multiple child use.
A maximum of 9 children is recommended for this swing set.

Wood Components (Not to Scale)

E1 | **FORT UPRIGHT - W4L14134**
(1) | ***1 3/8"x3 3/8"x89 1/2" (36x86x2273)***

E2 | **FORT UPRIGHT - W4L14135**
(1) | ***1 3/8"x3 3/8"x89 1/2" (36x86x2273)***

E3 | **FORT UPRIGHT - W2A03111**
(1) | ***1 3/8"x3 3/8"x89 1/2" (36x86x2273)***

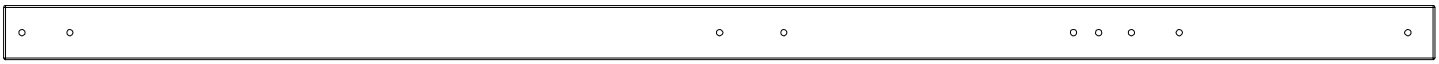

E4 | **FORT UPRIGHT - W4L14136**
(1) | ***1 3/8"x3 3/8"x89 1/2" (36x86x2273)***

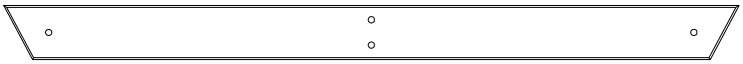

E50 | **END SUPPORT - W4L14154**
(1) | ***1 1/2"x3 1/2"x46" (36x86x1168)***

E77 | **ANGLE BRACE - W4L14137**
(2) | ***1 3/8"x3 3/8"x81" (36x86x2056)***

F1 | **ANGLE BRACE - W4L14138**
(2) | ***1 3/8"x2 3/8"x18 1/8" (36x60x460)***

F2 | **ANGLE BRACE - W4L14139**
(2) | ***1 3/8"x2 3/8"x12 1/4" (36x60x310)***

G1 | **GROUND BOARD - W4L14140**
(2) | ***1"x5 1/4"x59 1/2" (24x134x1511)***

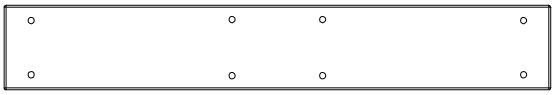

G2 | **SWING BEAM SUPPORT - W4L14141**
(1) | ***1"x5 1/4"x34 1/8" (24x134x868)***

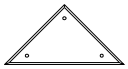

G3 | **PICNIC SUPPORT - W4L14142**
(2) | ***1"x5 1/4"x5 1/4" (24x134x134)***

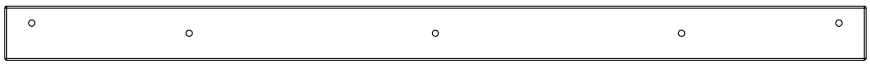

H1 | **ROOF CROSS BRACE - W4L14143**
(2) | ***1"x3 3/8"x53 7/8" (24x86x1368)***

Wood Components (Not to Scale)

H2 (3) | **FLOOR JOIST - W4L14144**
1"x3 3/8"x34 1/8" (24x86x868)

H4 (1) | **FLOOR BRACE - W4L14145**
1"x3 3/8"x34 1/8" (24x86x868)

H5 (2) | **PICNIC TARP SUPPORT - W4L14146**
1"x3 3/8"x24 1/2" (24x86x622)

H6 (2) | **WALL SLAT - W4L14147**
1"x3 3/8"x25 1/2" (24x86x648)

H7 (2) | **PICNIC SUPPORT - W4L14148**
1"x3 3/8"x15 1/4" (24x86x387)

H8 (2) | **PICNIC SUPPORT - W4L14149**
1"x3 3/8"x13 1/2" (24x86x344)

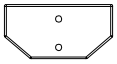

H9 (2) | **PICNIC SUPPORT - W4L14150**
1"x3 3/8"x6 3/4" (24x86x172)

H10 (4) | **FLOOR BRACE - W4L14151**
1"x3 3/8"x3 3/8" (24x86x86)

H11 (1) | **FLOOR JOIST - W4L14152**
1"x3 3/8"x34 1/8" (24x86x868)

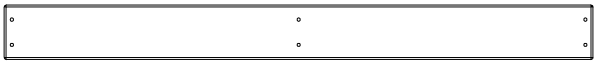

H12 (2) | **SEAT BOARD - W4L14346**
1"x3 3/8"x36 3/4" (24x86x935)

H73 (2) | **ROCK WALL RAIL - W4L14153**
1"x3 3/8"x51 1/8" (24x86x1299)

H80 (1) | **GROUND BOARD - W4L14155**
1"x3 3/8"x79 1/2" (24x86x2018)

H81 (1) | **ATTACHMENT BOARD - W4L14394**
1"x3 3/8"x20 1/4" (24x86x514)

Wood Components (Not to Scale)

J1 (2) | **WALL SLAT - W4L14156**
1"x2 3/8"x25 1/2" (24x60x648)

K1 (3) | **WALL RAIL - W4L14157**
5/8"x5 1/4"x34 7/8" (16x134x887)

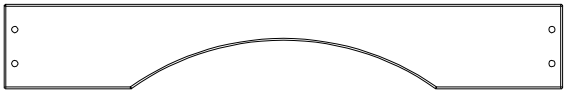

K2 (1) | **ARCHED WALL RAIL - W4L14158**
5/8"x5 1/4"x34 7/8" (16x134x887)

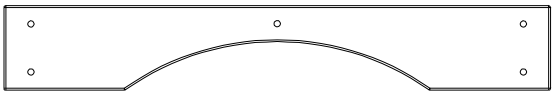

K3 (1) | **ARCHED WALL RAIL - W4L14159**
5/8"x5 1/4"x34 1/8" (16x134x868)

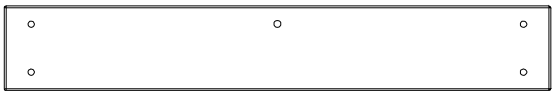

K4 (1) | **WALL RAIL - W4L14160**
5/8"x5 1/4"x34 1/8" (16x134x868)

M1 (2) | **TARP SUPPORT - W4L14161**
5/8"x3 3/8"x40" (16x86x1016)

M2 (11) | **FLOOR BOARD - W4L14162**
5/8"x3 3/8"x36 3/4" (16x86x935)

M3 (3) | **TARP SUPPORT - W4L14163**
5/8"x3 3/8"x36 3/4" (16x86x935)

M4 (1) | **FLOOR/TARP SUPPORT - W4L14164**
5/8"x3 3/8"x34 7/8" (16x86x887)

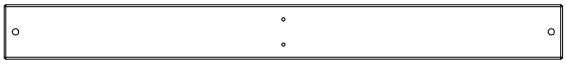

M5 (1) | **WALL RAIL - W4L14165**
5/8"x3 3/8"x34 7/8" (16x86x887)

M6 (1) | **WALL RAIL - W4L14166**
5/8"x3 3/8"x34 7/8" (16x86x887)

Wood Components (Not to Scale)

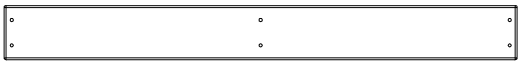

M7 (2) | **FLOOR BOARD - W4L14167**
5/8"x3 3/8"x32 1/8" (16x86x815)

M8 (1) | **PICNIC CLEAT - W4L14168**
5/8"x3 3/8"x10 1/8" (16x86x258)

M9 (1) | **PICNIC CLEAT - W4L14169**
5/8"x3 3/8"x6 3/4" (16x86x172)

M11 (2) | **WALL RAIL - W4L14171**
5/8"x3 3/8"x4 3/4" (16x86x122)

M10 (2) | **WALL RAIL - W4L14170**
5/8"x3 3/8"x6 1/4" (16x86x160)

M12 (9) | **WALL SLAT - W4L14172**
5/8"x3 3/8"x25 1/4" (16x86x640)

M13 (1) | **WALL RAIL - W4L14173**
5/8"x3 3/8"x34 7/8" (16x86x887)

M14 (1) | **FLOOR/TARP SUPPORT - W4L14174**
5/8"x3 3/8"x34 7/8" (16x86x887)

M71 (6) | **ROCK BOARD - W4L14175**
5/8"x3 3/8"x20 1/4" (16x86x514)

M72 (2) | **ROCK WALL SLAT - W4L14176**
5/8"x3 3/8"x20 1/4" (16x86x514)

M77 (1) | **SLIDE BRACE - W100544**
5/8"x3 3/8"x17 1/4" (16x86x438)

M78 (2) | **CENTER SLIDE BRACE - W100545**
5/8"x3 3/8"x17 1/4" (16x86x438)

N1 (1) | **WALL RAIL - W4L14177**
5/8"x1 1/8"x34 1/8" (16x30x868)

SB74 (1) | **SWING BEAM - W4L14178**
2"x5 1/4"x89 1/2" (50x134x2274)

W71 (1) | **SWING BEAM SUPPORT - W4L14179**
2"x3 3/8"x50 3/8" (50x86x1280)

Hardware Components

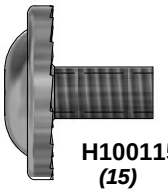

H100115 (15) | BOLT WH 5/16x1/2

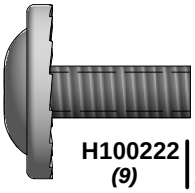

H100222 (9) | BOLT WH 5/16x3/4

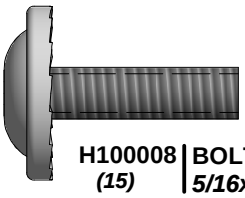

H100008 (15) | BOLT WH 5/16x1

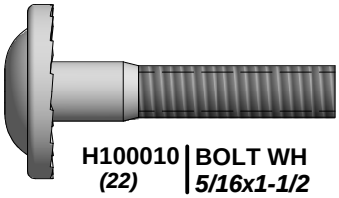

H100010 (22) | BOLT WH 5/16x1-1/2

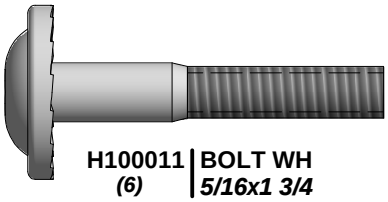

H100011 (6) | BOLT WH 5/16x1 3/4

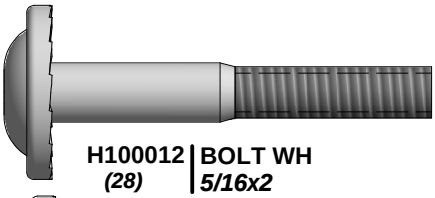

H100012 (28) | BOLT WH 5/16x2

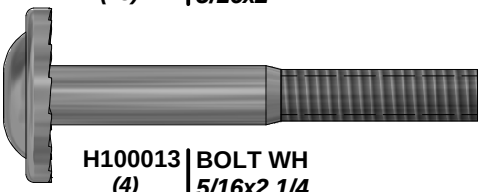

H100013 (4) | BOLT WH 5/16x2 1/4

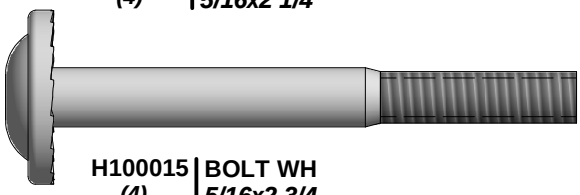

H100015 (4) | BOLT WH 5/16x2 3/4

H100019 (2) | BOLT WH 5/16x3 3/4

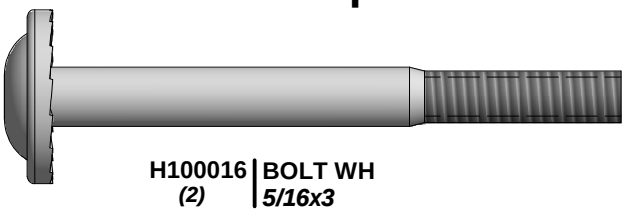

H100016 (2) | BOLT WH 5/16x3

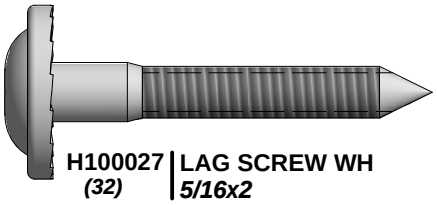

H100027 (32) | LAG SCREW WH 5/16x2

H100031 (80) | WASHER LOCK EXT 12x19

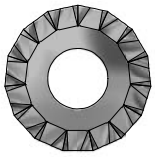

H100030 (96) | WASHER LOCK EXT 8x19

H100001 (7) | BOLT FA 3/8x1 1/2

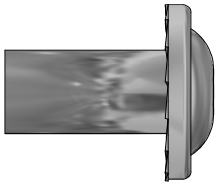

H100005 (71) | NUT BARREL WH 5/16x7/8

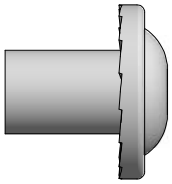

H100004 (11) | NUT BARREL WH 5/16 x 5/8

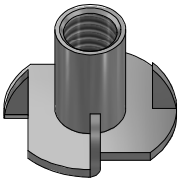

H100074 (26) | T-NUT 5/16

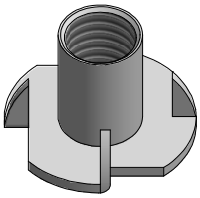

H100073 (7) | T-NUT 3/8

H100128 (19) | SCREW PWH 8x5/8

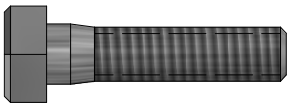

H100042 (4) | BOLT HEX 5/16x1 1/4

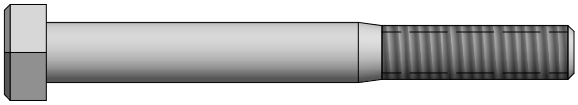

H100047 (2) | BOLT HEX 5/16x2 3/4

Hardware Components

H100088 (44) | SCREW PFH 8x1 1/8

H100087 (9) | SCREW PFH 8x1 1/4

H100086 (132) | SCREW PFH 8x1 1/2

H100089 (22) | SCREW PFH 8x1 3/4

H100090 (30) | SCREW PFH 8x2 1/2"

H100006 (3) | NUT BARREL WH 5/16x1 1/2

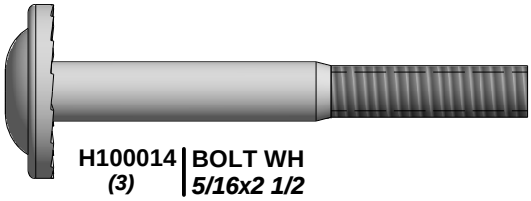

H100014 (3) | BOLT WH 5/16x2 1/2

H100062 (4) | BOLT PTH 1/4x1 1/4

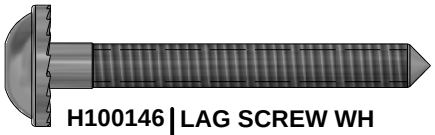

H100146 (4) | LAG SCREW WH 1/4x2

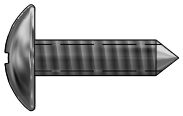

H100083 (9) | SCREW TAPPING 14x3/4

H100072 (4) | T-NUT 1/4

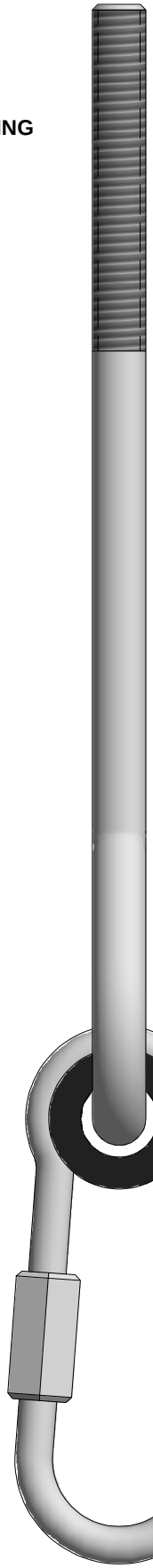

H100099 (6) | SWING HANGER 5/16x9 1/2

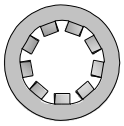

H100108 (4) | WASHER LOCK INT 8x15

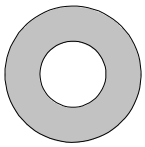

H100106 (4) | WASHER FLAT 9x18

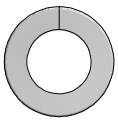

H100095 (4) | WASHER SPLIT 5/16

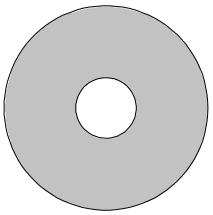

H100105 (15) | WASHER FLAT 8x27

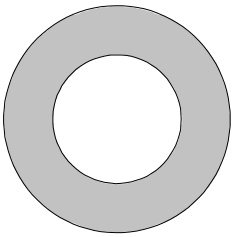

H100103 (7) | WASHER SAFETY 17x30

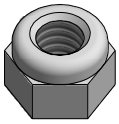

H100110 (9) | NUT LOCK 5/16

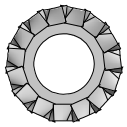

H100138 (4) | WASHER LOCK EXT 6x15

Accessory Components (Not to Scale)

A100054 (1) | SLIDE RAIL 8' GREEN RIGHT

A100055 (1) | SLIDE RAIL 8' GREEN LEFT

A100056 (1) | SLIDE BED 8' YELLOW

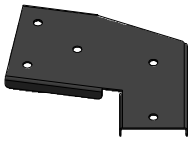

A100325 (1) | SWING BEAM EXTENSION BRACKET-LEFT

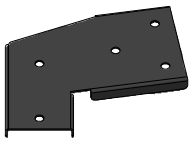

A100326 (1) | SWING BEAM EXTENSION BRACKET-RIGHT

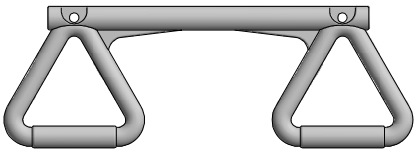

A6P00034 (1) | TRAPEZE YELLOW

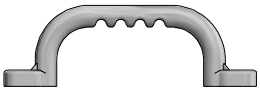

A6P00303 (2) | HAND GRIP YELLOW PLASTIC

A100164 (1) | BYD ID TAG (LARGE) AGES 3-10

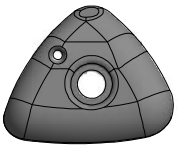

A100060 (6) | CLIMBING ROCK GREEN SMALL

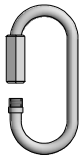

A100069 (6) | QUICK LINK

A100314 (1) | "A" REVISION TAG

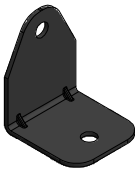

A100053 (4) | L BRACKET 54x67 - GRN

A4M01046 (8) | L BRACKET 2.5x38x55x55

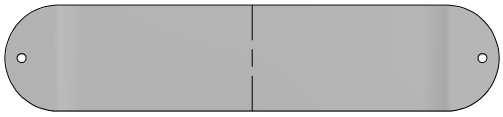

A100070 (2) | SWING SEAT YELLOW 26"

A100140 (2) | L BRACKET 66x66x127

A100177 (2) | CHAIN GREEN 31"

A100068 (4) | CHAIN GREEN 51.25"

Accessory Components (Not to Scale)

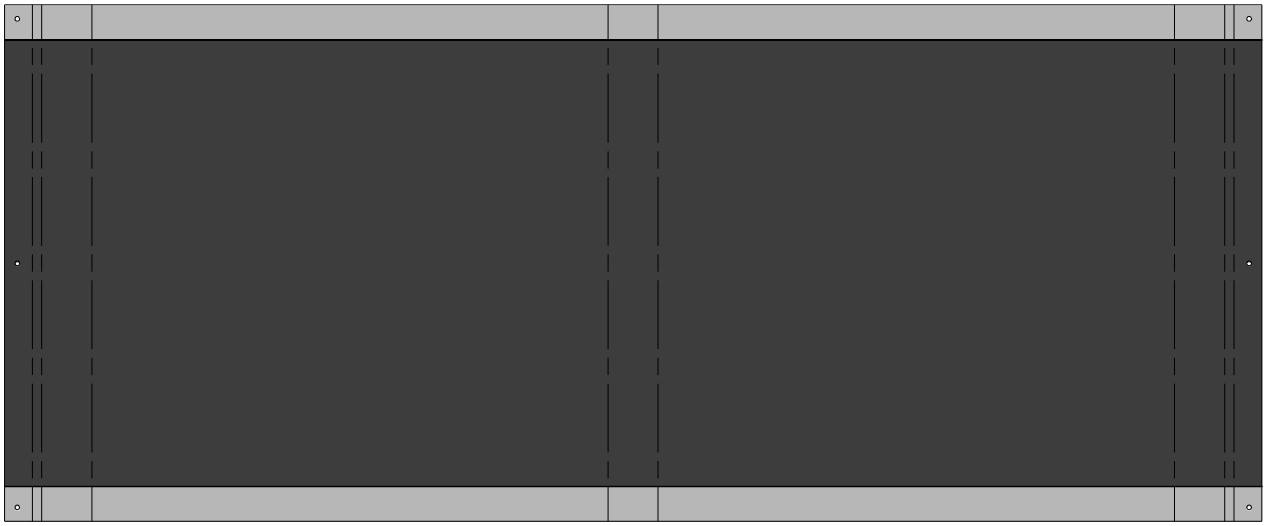

A100196 (1) | ROOF TARP

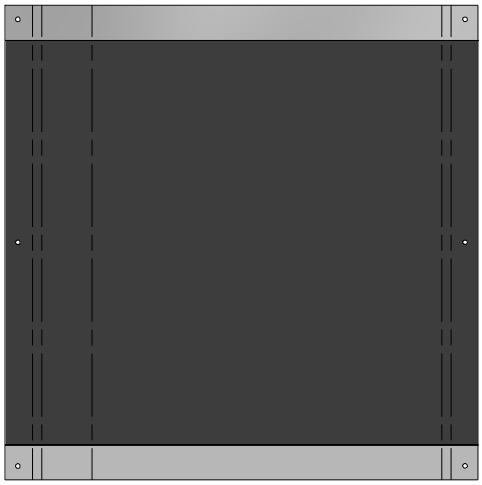

A100195 (1) | PICNIC TABLE TARP

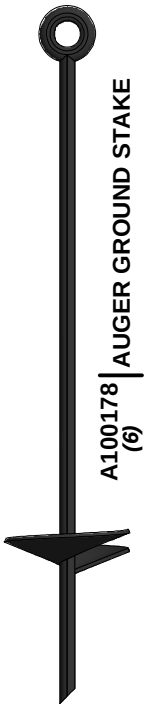

A100178 (6) | AUGER GROUND STAKE

A4M01169 (1) | A-FRAME BRACKET

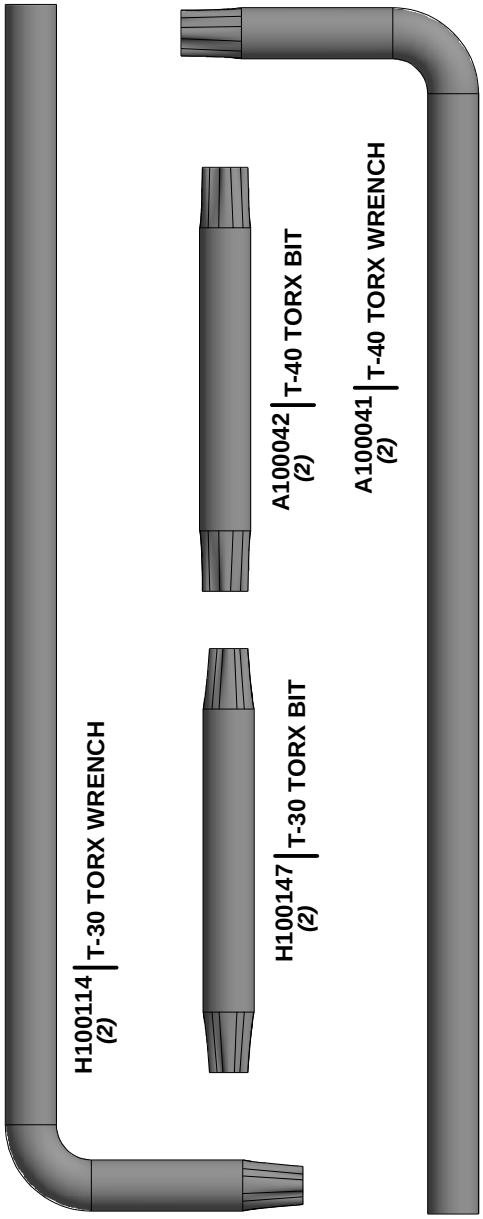

H100114 (2) | T-30 TORX WRENCH

H100147 (2) | T-30 TORX BIT

A100042 (2) | T-40 TORX BIT

A100041 (2) | T-40 TORX WRENCH

PRE-ASSEMBLY STEP 1 - SORTING PARTS

It is critical for ease of assembly that you take the time to sort and organize the wood and hardware.

WOOD PARTS:

- **Organize wood parts by the three-digit, alpha-numeric number stamped on each board (ex. P01).**
- **If there are multiple boards with the same stamped number, stack those pieces together.**
- **Stamps can be found on the flat surface of the boards or on the end of the boards.**
- **Allow yourself plenty of room - the wood pieces can take up a significant amount of space.**

NOTE: CARTONS ARE NOT ORGANIZED BY BOARD NUMBER.

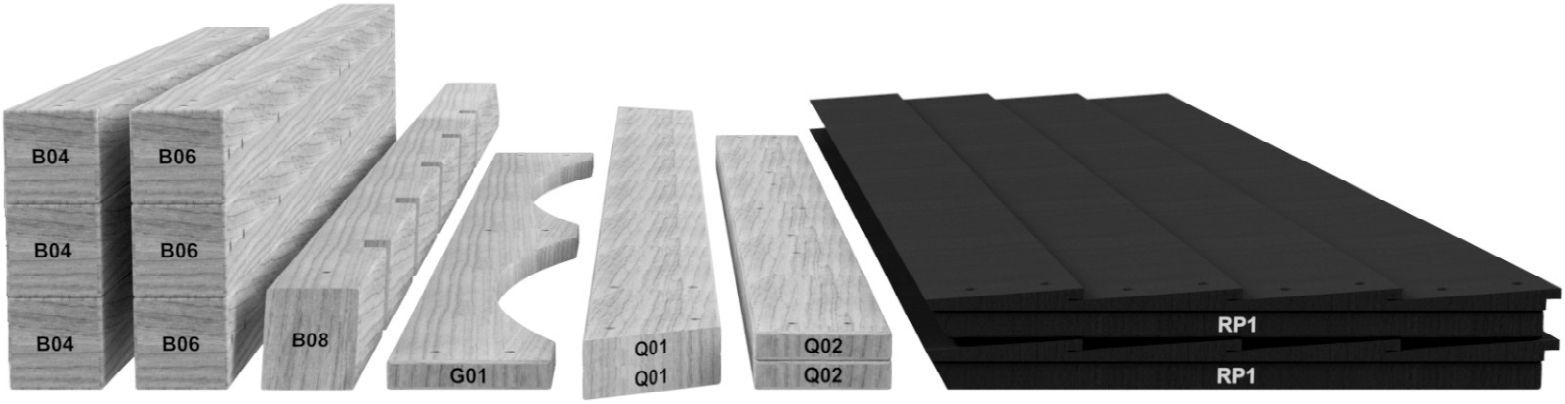

HARDWARE PARTS:

- **We recommend that you have a separate table to organize the hardware.**
- **Hardware bags are printed with a seven-digit, alpha-numeric part number.**
- **You can organize your hardware by part number or group by hardware type (i.e. bolts, nuts, etc.).**
- **During assembly you only need to reference the last four digits of the number.**

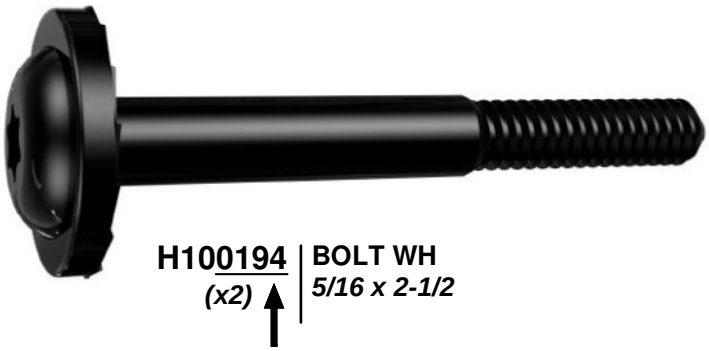

PRE-ASSEMBLY STEP 2 - TOOLS REQUIRED

Cordless Drill or
Electric Drill

Drill Attachments:
Phillips Head

1/8", 3/16", 3/8" & 7/16"
Drill Bits

Phillips Screw Driver

Open End Wrenches 1/2" & 9/16"

3/8" Drive Ratchet, 1/2" &
9/16" STD Sockets 1/2" & 9/16" Deep
Sockets

Claw Hammer

Rubber Mallet - Optional

Tape Measure

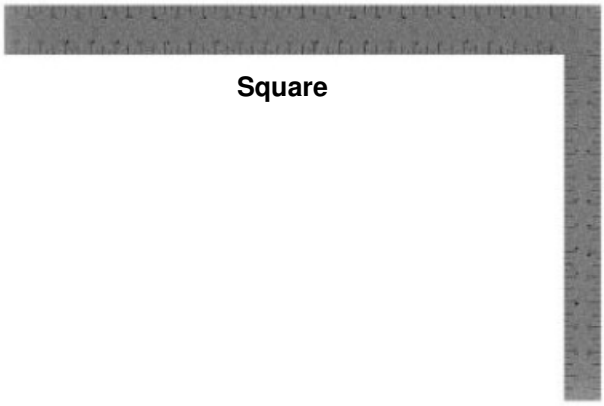

Square

Level 24"

PRE-ASSEMBLY STEP 3 - CHOOSE YOUR ASSEMBLY METHOD

There are several types of assembly instructions available to you.

1. **Printed Assembly Manual included with your set**
2. **BILT APP - 3D interactive instructions**
3. **Combination of the Printed Manual and BILT APP (Note: Step numbers can differ between the two methods)**

SLIDE ASSEMBLY

STEP 1

A100056 *(x1)* | SLIDE BED 8' YELLOW

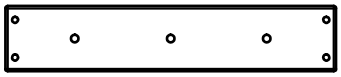

M77 *(x1)* | SLIDE BRACE - W100544
5/8"x3 3/8"x17 1/4" (16x86x438)

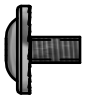

H100115 *(x3)* | BOLT WH *5/16x1/2*

H100074 *(x3)* | T-NUT *5/16*

NOTE:
USE M77 SLIDE BRACE AS A TEMPLATE FOR DRILLING BOTTOM HOLE PATTERN IN SLIDE BED. BE SURE TO PLACE SLIDE BRACE UP 1/4" FROM BOTTOM EDGE OF SLIDE BED BEFORE MARKING HOLE PATTERN.

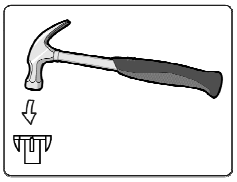

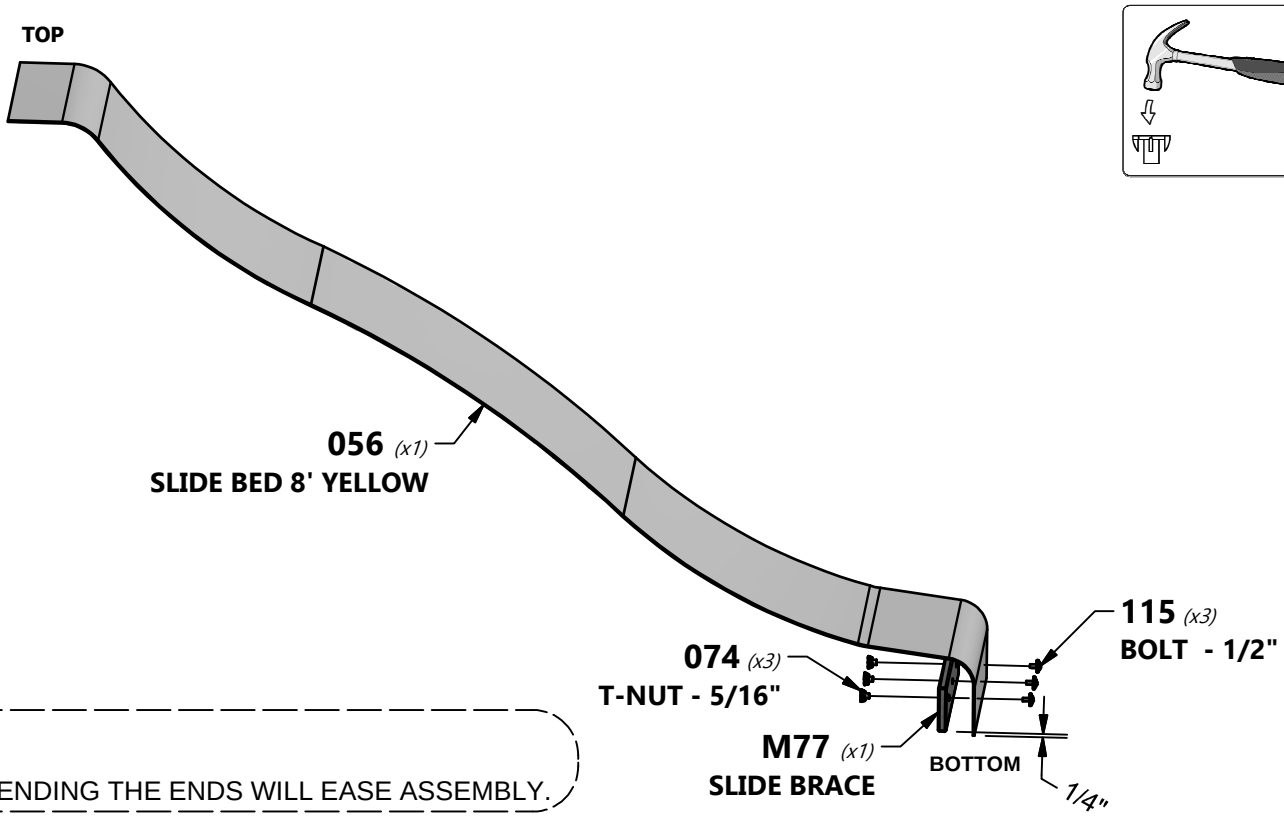

TIP:
PREBENDING THE ENDS WILL EASE ASSEMBLY.

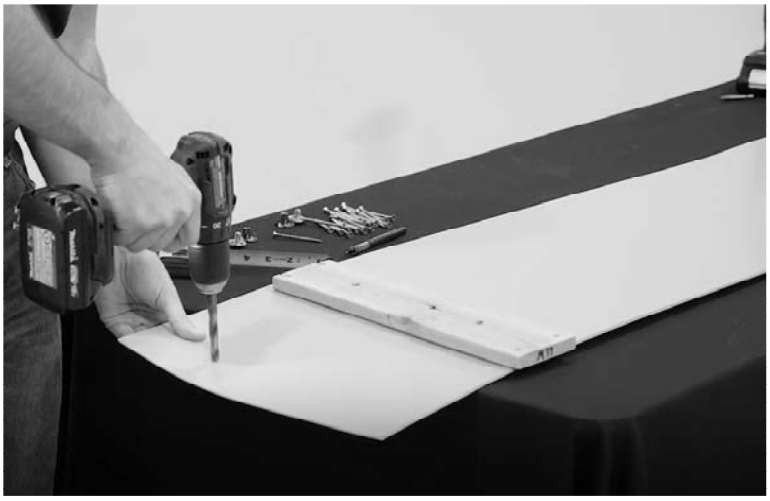

SLIDE ASSEMBLY

STEP 2

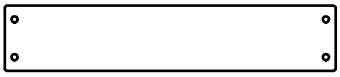

M78 *(x2)* | **CENTER SLIDE BRACE - W100545**
5/8"x3 3/8"x17 1/4" (16x86x438)

A100054 *(x1)* | **SLIDE RAIL 8' GREEN RIGHT**

A100055 *(x1)* | **SLIDE RAIL 8' GREEN LEFT**

H100090 *(x24)* | **SCREW PFH**
8x2 1/2"

NOTE:

USING A 1/8" DRILL BIT, DRILL PILOT HOLES IN EACH INDENTATION ALONG EACH SIDE RAIL. THERE SHOULD BE 12 INDENTIONS ON EACH RAIL.

PLACE THE SLIDE RAIL ON FLAT SURFACE. STARTING AT THE BOTTOM, INSERT THE SLIDE BED INTO THE CHANNEL ON THE INSIDE OF THE RAIL. HOLD THE SLIDE BED IN PLACE WHILE A HELPER BENDS THE SLIDE BED INO THE CHANNEL. MAKE SURE THE SLIDE BED IS COMPLETELY INSERTED INTO THE CHANNEL.

INSERT THE TWO CENTER SLIDE BRACES INTO THEIR RESPECTIVE LOCATIONS. SECURE THE SLIDE BED AND CENTER USING THE PROVIDED HARDWARE.

REPEAT THIS PROCESS FOR THE OPPOSITE SLIDE RAIL.

TIP:

MAKE CERTAIN SUPPORTS AND SLIDE BED ARE FULLY ENGAGED WITHIN CHANNEL OF SLIDE RAILS.

A HELPER IS REQUIRED FOR THIS PHASE.

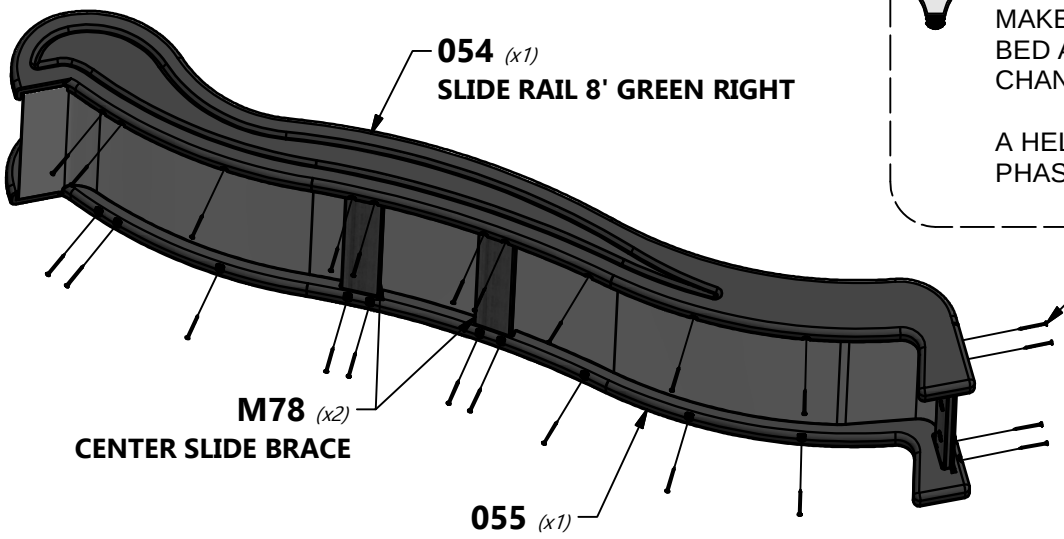

SWING BEAM ASSEMBLY

STEP 1

SB74 (1) | SWING BEAM - W4L14178
2"x5 1/4"x89 1/2" (50x134x2274)

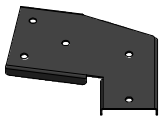

A100325 (1) | SWING BEAM EXTENSION BRACKET-LEFT

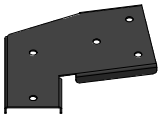

A100326 (1) | SWING BEAM EXTENSION BRACKET-RIGHT

A100140 (2) | L BRACKET 66x66x127

H100047 (2) | BOLT HEX
5/16x2 3/4

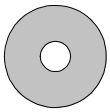

H100105 (4) | WASHER FLAT
8x27

H100110 (2) | NUT LOCK
5/16

H100011 (3) | BOLT WH
5/16x1 3/4

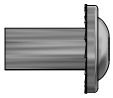

H100005 (3) | NUT BARREL WH
5/16x7/8

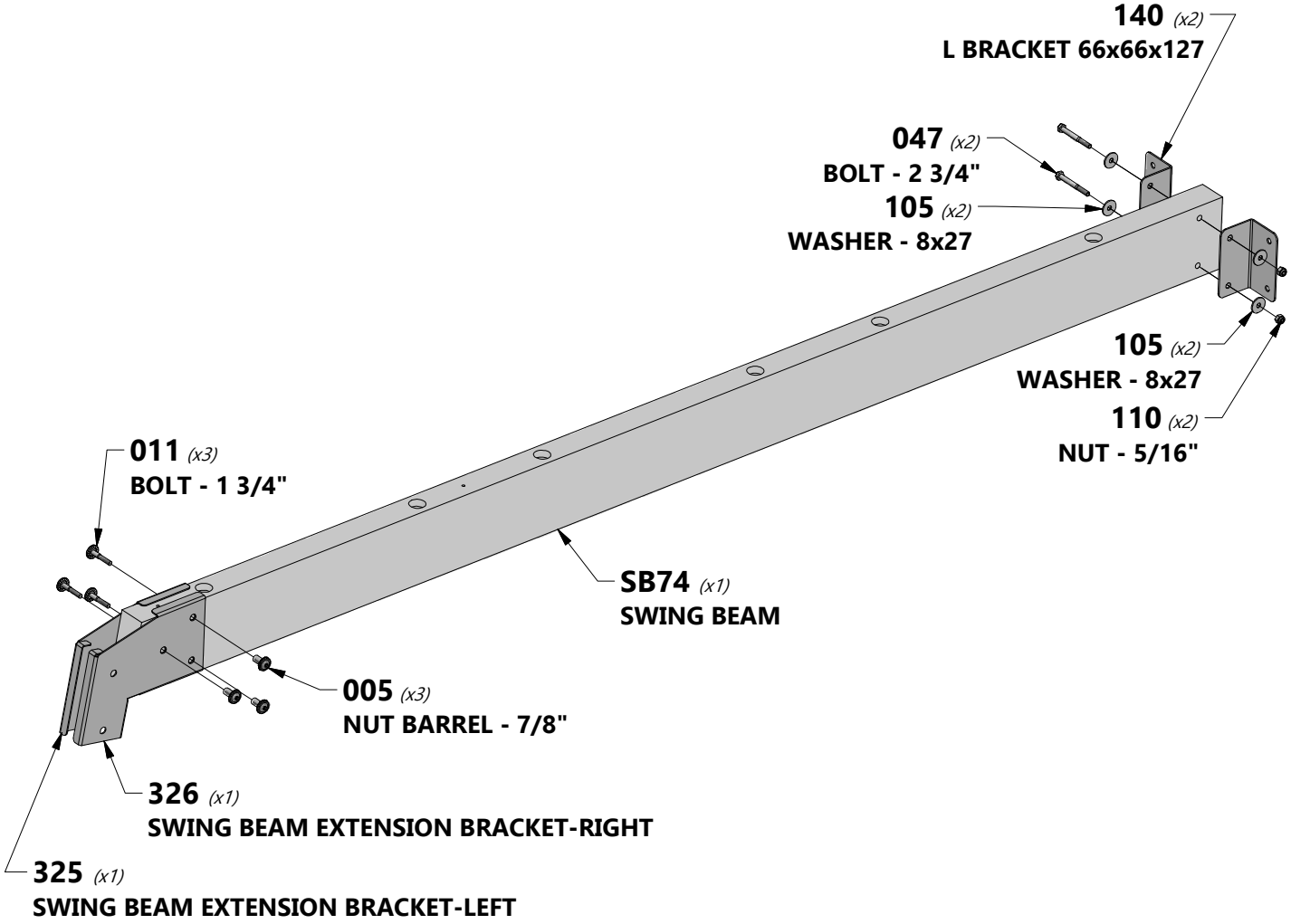

SWING BEAM ASSEMBLY

STEP 2

W71 (1) | **SWING BEAM SUPPORT - W4L14179**
2"x3 3/8"x50 3/8" (50x86x1280)

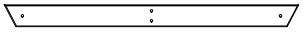

E50 (1) | **END SUPPORT - W4L14154**
1 1/2"x3 1/2"x46" (36x86x1168)

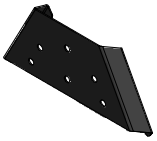

A4M01169 (1) | **A-FRAME BRACKET**

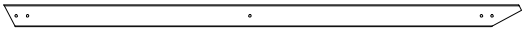

E77 (2) | **ANGLE BRACE - W4L14137**
1 3/8"x3 3/8"x81" (36x86x2056)

H80 (1) | **GROUND BOARD - W4L14155**
1"x3 3/8"x79 1/2" (24x86x2018)

H100019 (2) | **BOLT WH**
5/16x3 3/4

H100016 (2) | **BOLT WH**
5/16x3

H100014 (2) | **BOLT WH**
5/16x2 1/2

H100012 (4) | **BOLT WH**
5/16x2

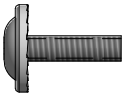

H100008 (4) | **BOLT WH**
5/16x1

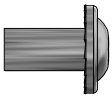

H100005 (12) | **NUT BARREL WH**
5/16x7/8

H100006 (2) | **NUT BARREL WH**
5/16x1 1/2

H100030 (8) | **WASHER LOCK EXT**
8x19

H100031 (14) | **WASHER LOCK EXT**
12x19

TIP:
LEAVE BOTTOM BOLTED CONNECTIONS LOOSE. THEN SLIDE A-FRAME BRACKET DOWN FROM THE TOP. THEN TIGHTEN ALL BOLTED CONNECTIONS.

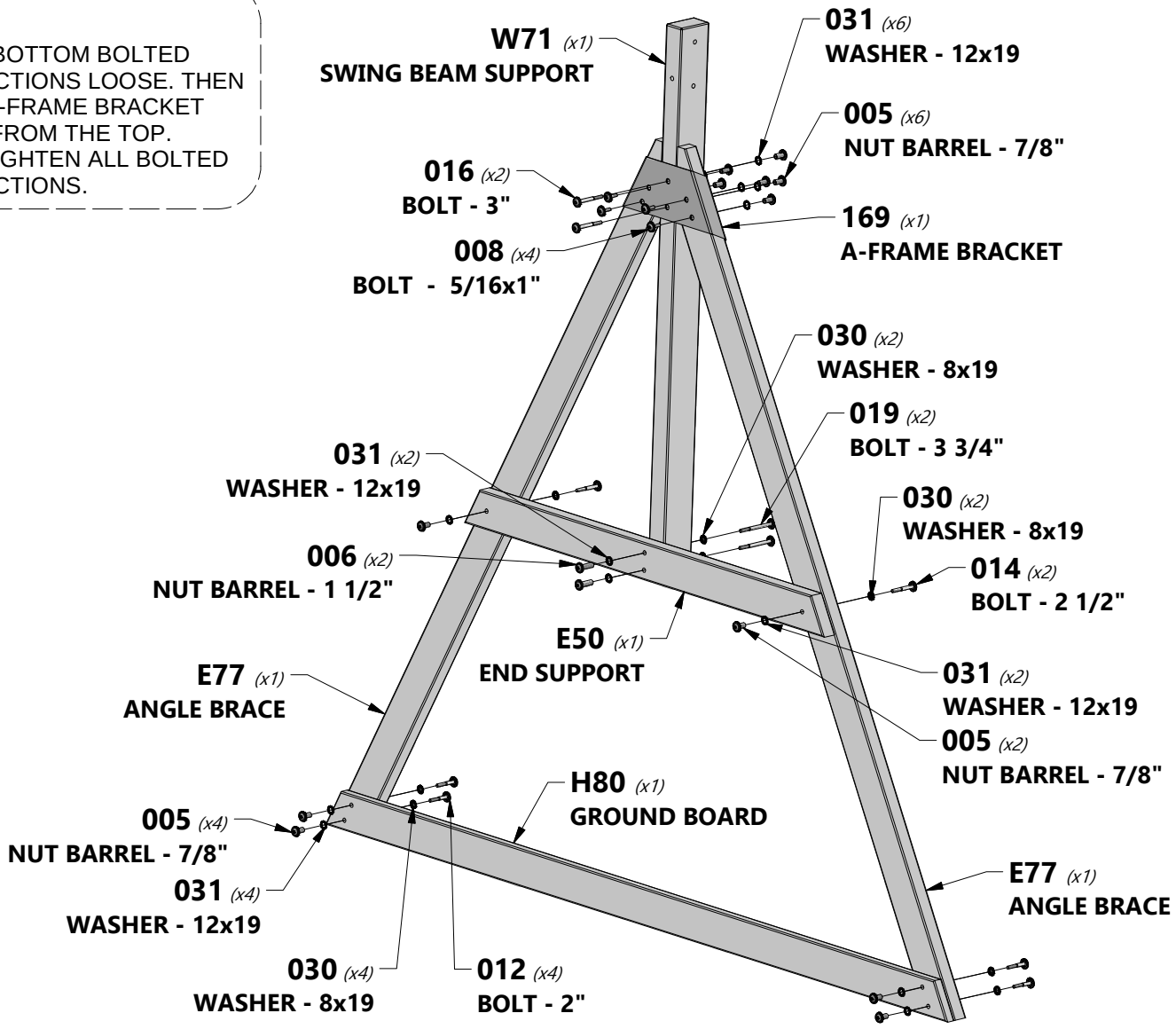

SWING BEAM ASSEMBLY

STEP 3

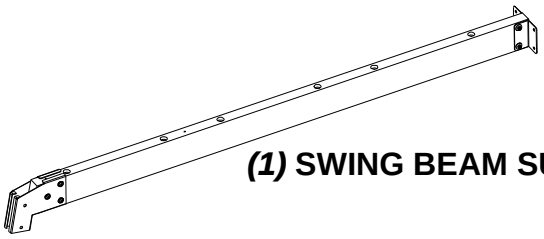

(1) **SWING BEAM SUBASSEMBLY**

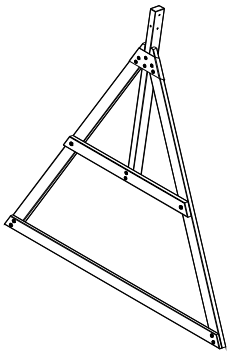

(1) **SWING BEAM END SUBASSEMBLY**

H100014 *(1)* | **BOLT WH** *5/16x2 1/2*

H100011 *(2)* | **BOLT WH** *5/16x1 3/4*

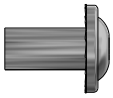

H100005 *(2)* | **NUT BARREL WH** *5/16x7/8*

H100006 *(1)* | **NUT BARREL WH** *5/16x1 1/2*

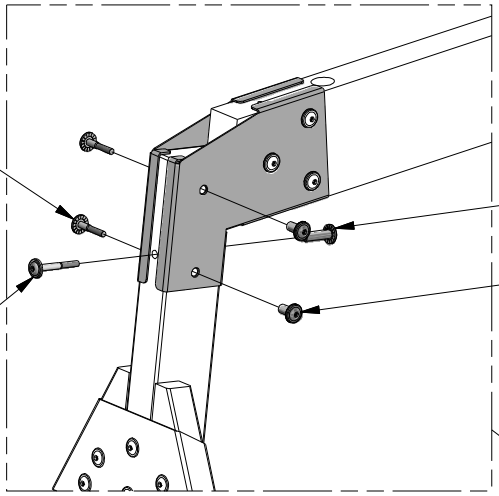

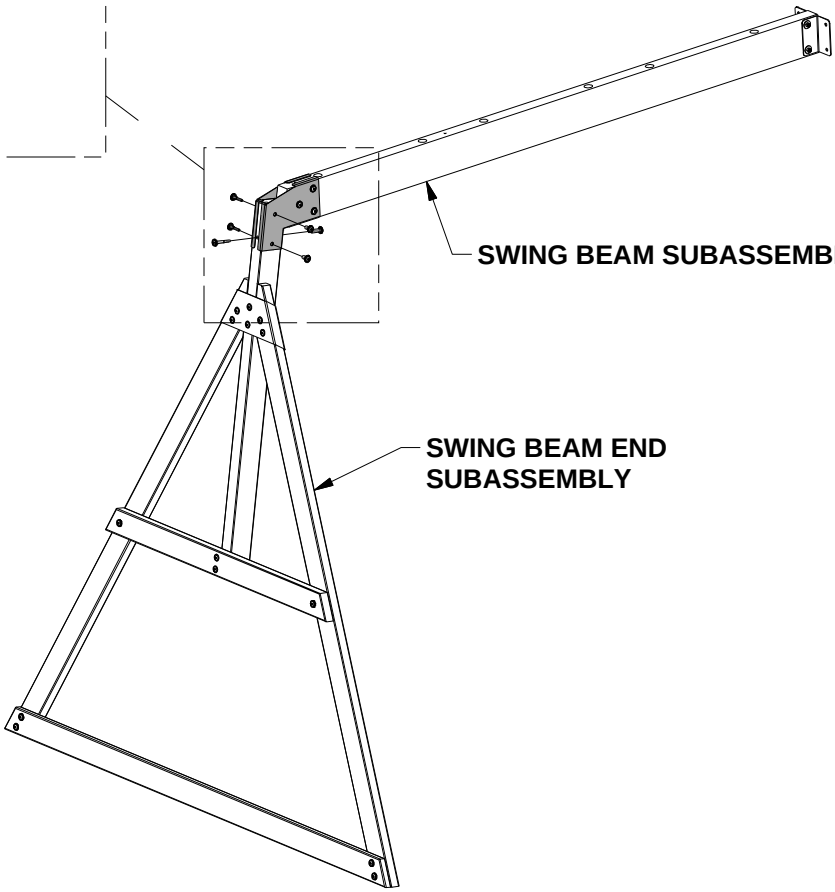

SWING BEAM ASSEMBLY

STEP 4

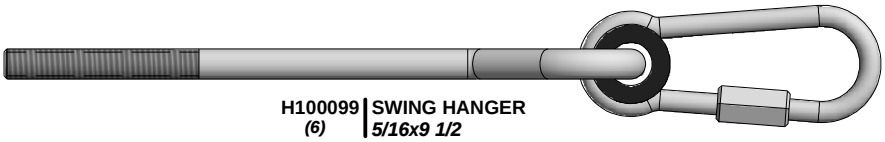

H100099 (6) | SWING HANGER *5/16x9 1/2*

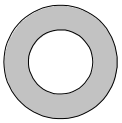

H100103 (6) | WASHER SAFETY *17x30*

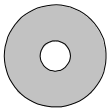

H100105 (6) | WASHER FLAT *8x27*

H100110 (6) | NUT LOCK *5/16*

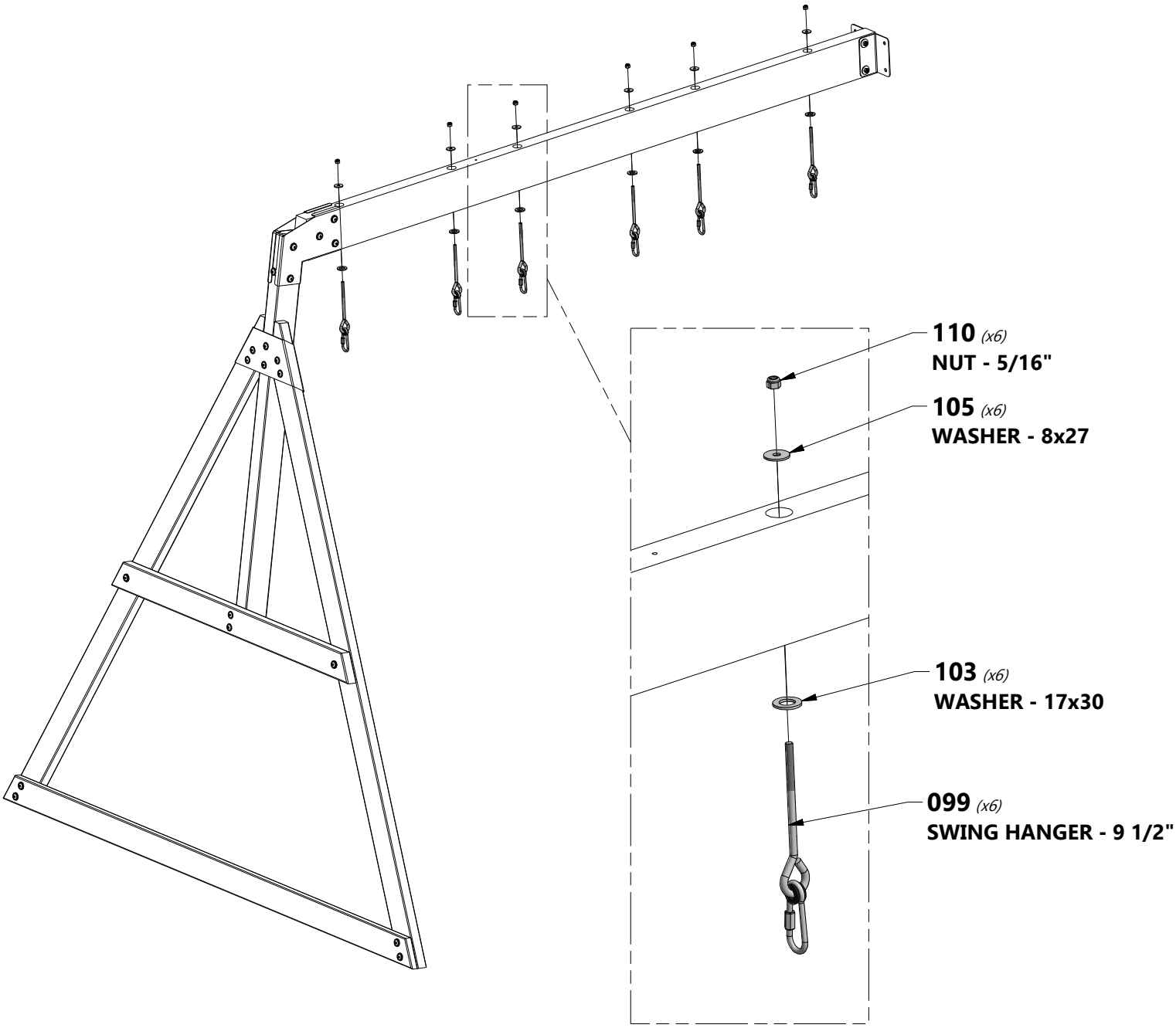

ROCK LADDER ASSEMBLY

STEP 1

H81 (1) | **ATTACHMENT BOARD - W4L14394**
1"x3 3/8"x20 1/4" (24x86x514)

M71 (6) | **ROCK BOARD - W4L14175**
5/8"x3 3/8"x20 1/4" (16x86x514)

M72 (2) | **ROCK WALL SLAT - W4L14176**
5/8"x3 3/8"x20 1/4" (16x86x514)

H73 (2) | **ROCK WALL RAIL - W4L14153**
1"x3 3/8"x51 1/8" (24x86x1299)

H100086 (32) | **SCREW PFH**
8x1 1/2

H100089 (4) | **SCREW PFH**
8x1 3/4

NOTE:

1. Assemble slats to rails as shown.
2. Note orientation of slats, be sure to arrange as shown.
3. See drawing below for slat spacing on rails.
4. Using slats as a guide, pre-drill top edges of rails with a 1/8" drill bit. Failure to pre-drill may result in board splitting.

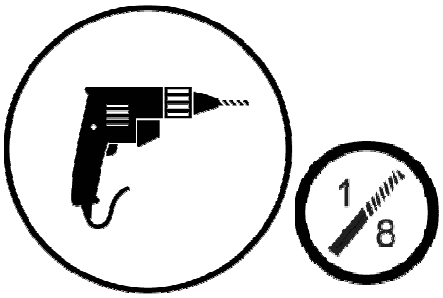

3 in [75 mm]
TYP

086 *(x32)*
SCREW - 1 1/2"

H73 *(x1)*
ROCK WALL RAIL

H81 *(x1)*
ATTACHMENT BOARD

089 *(x4)*
SCREW - 1 3/4"

M71 *(x6)*
ROCK BOARD

THESE SURFACES FLUSH BOTH SIDES

H73 *(x1)*
ROCK WALL RAIL

M72 *(x2)*
ROCK WALL SLAT

PRE-DRILL TOP EDGE OF RAILS

ALIGN FRONT EDGE OF SLAT WITH TOP OF RAIL

3 in [75 mm]
TYPICAL SLAT SPACING
7 SPACES

FLUSH

ROCK LADDER ASSEMBLY

STEP 2

TOP

A100060 (6) | CLIMBING ROCK GREEN SMALL

H100088 (6) | SCREW PFH 8x1 1/8

H100001 (6) | BOLT FA 3/8x1 1/2

H100073 (6) | T-NUT 3/8

NOTE:

1. Install T-nuts before attaching rocks.
2. Orient top edge of rocks with top edge of slats.
3. Fasten rocks as shown.

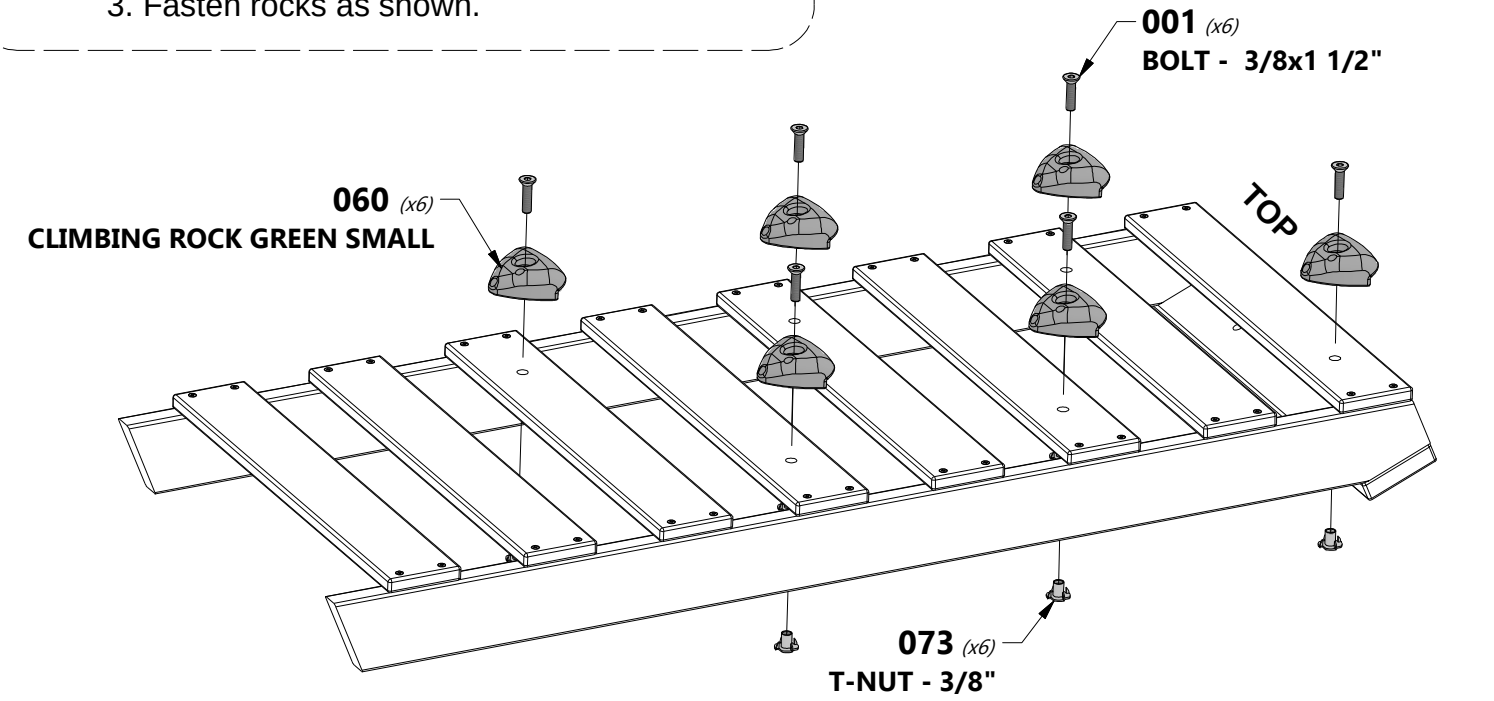

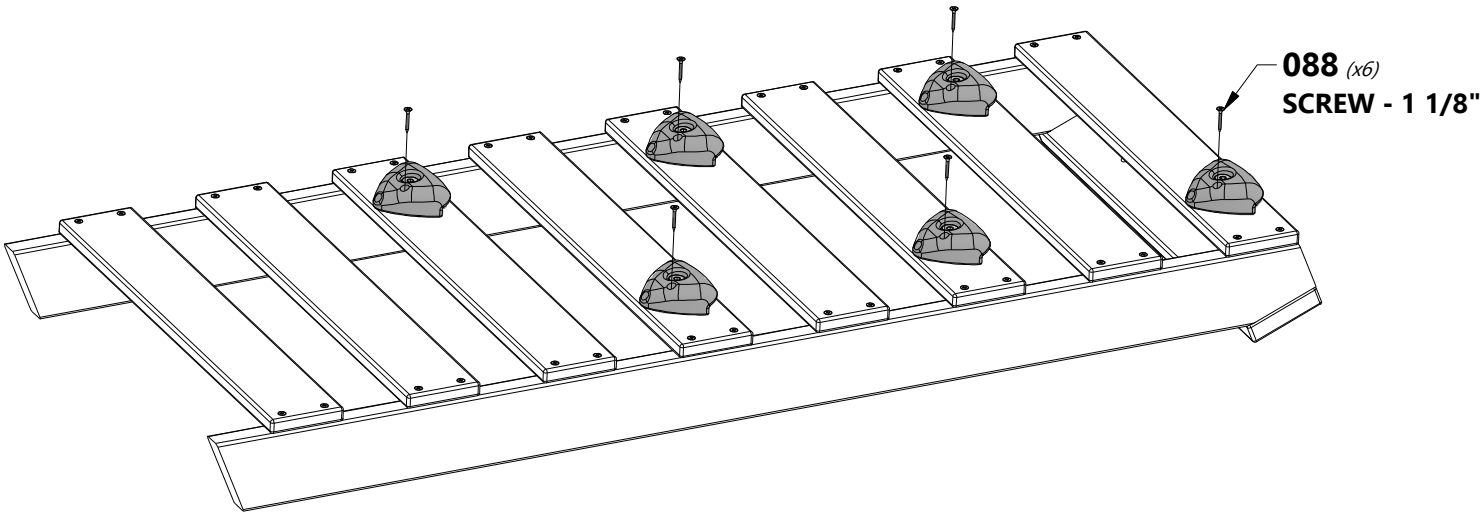

FORT ASSEMBLY

STEP 1

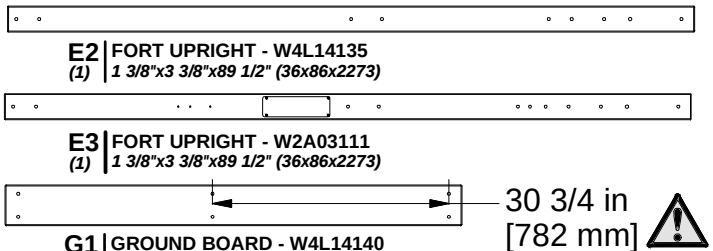

E2 (1) | FORT UPRIGHT - W4L14135
1 3/8"x3 3/8"x89 1/2" (36x86x2273)

E3 (1) | FORT UPRIGHT - W2A03111
1 3/8"x3 3/8"x89 1/2" (36x86x2273)

G1 (1) | GROUND BOARD - W4L14140
1"x5 1/4"x59 1/2" (24x134x1511)

H2 (1) | FLOOR JOIST - W4L14144
1"x3 3/8"x34 1/8" (24x86x868)

K4 (1) | WALL RAIL - W4L14160
5/8"x5 1/4"x34 1/8" (16x134x868)

G2 (1) | SWING BEAM SUPPORT - W4L14141
1"x5 1/4"x34 1/8" (24x134x868)

TOP

H1 (1) | ROOF CROSS BRACE - W4L14143
1"x3 3/8"x53 7/8" (24x86x1368)

N1 (1) | WALL RAIL - W4L14177
5/8"x1 1/8"x34 1/8" (16x30x868)

H100012 (10) | BOLT WH
5/16x2

H100010 (4) | BOLT WH
5/16x1-1/2

H100027 (2) | LAG SCREW WH
5/16x2

H100089 (2) | SCREW PFH
8x1 3/4

H100030 (16) | WASHER LOCK EXT
8x19

H100031 (14) | WASHER LOCK EXT
12x19

H100005 (14) | NUT BARREL WH
5/16x7/8

TIP:
FOR EASE OF ASSEMBLY WE RECOMMEND USING SAW HORSES TO ASSEMBLE FORT.

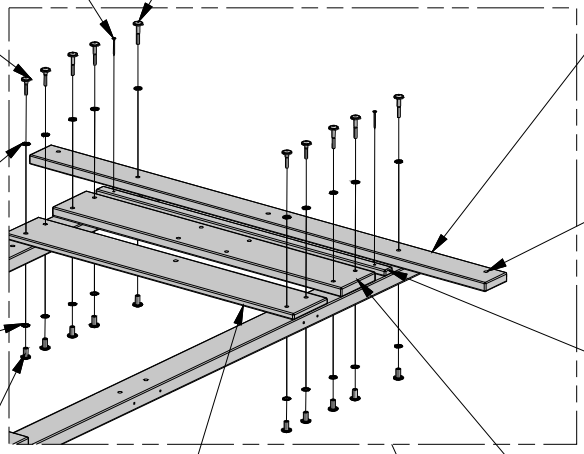

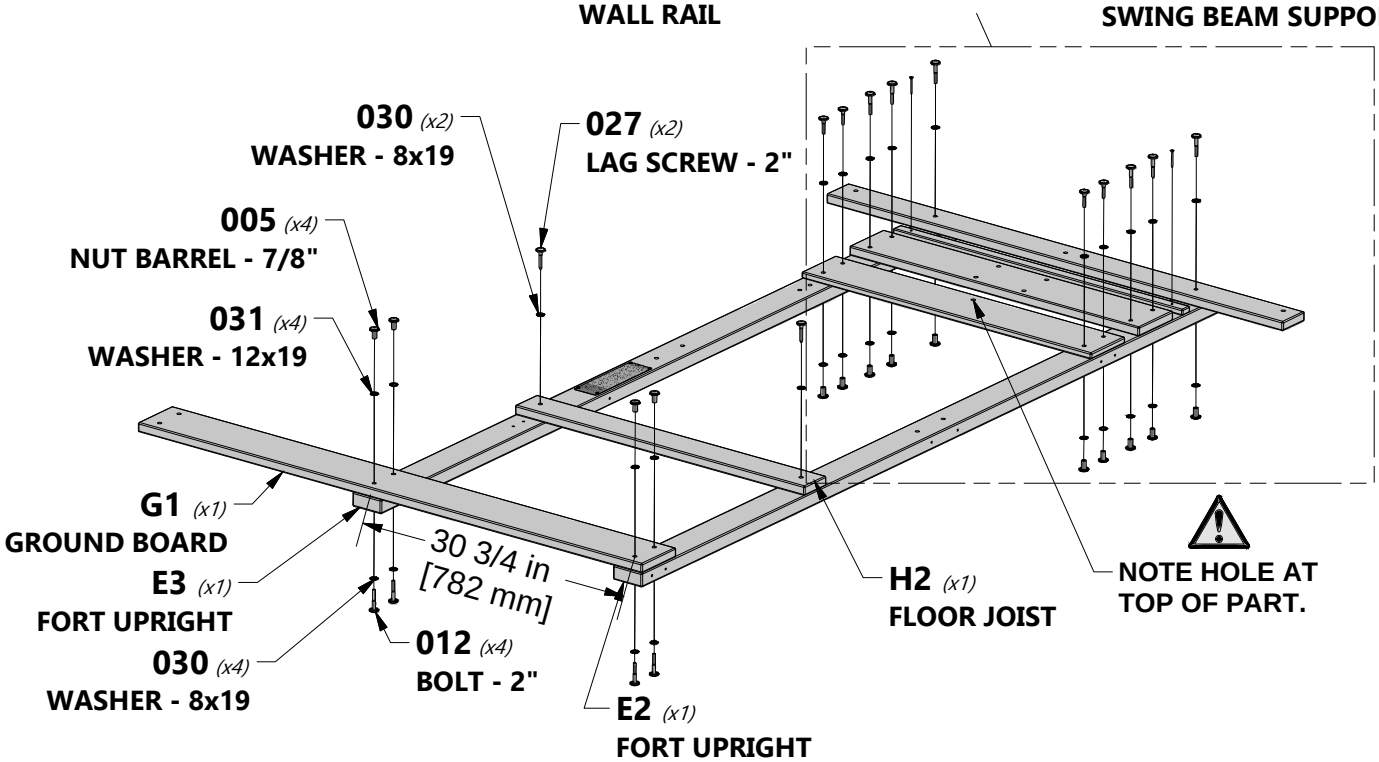

FORT ASSEMBLY

STEP 2

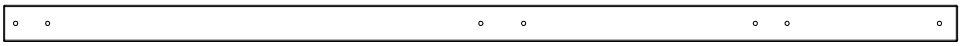

E1 (1) | **FORT UPRIGHT - W4L14134**
1 3/8"x3 3/8"x89 1/2" (36x86x2273)

E4 (1) | **FORT UPRIGHT - W4L14136**
1 3/8"x3 3/8"x89 1/2" (36x86x2273)

K3 (1) | **ARCHED WALL RAIL - W4L14159**
5/8"x5 1/4"x34 1/8" (16x134x868)

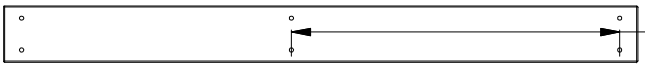

30 3/4 in
[782 mm]

G1 (1) | **GROUND BOARD - W4L14140**
1"x5 1/4"x59 1/2" (24x134x1511)

TOP

H1 (1) | **ROOF CROSS BRACE - W4L14143**
1"x3 3/8"x53 7/8" (24x86x1368)

H100012 (6) | **BOLT WH**
5/16x2

H100030 (10) | **WASHER LOCK EXT**
8x19

H100005 (10) | **NUT BARREL WH**
5/16x7/8

H100010 (4) | **BOLT WH**
5/16x1-1/2

H100031 (10) | **WASHER LOCK EXT**
12x19

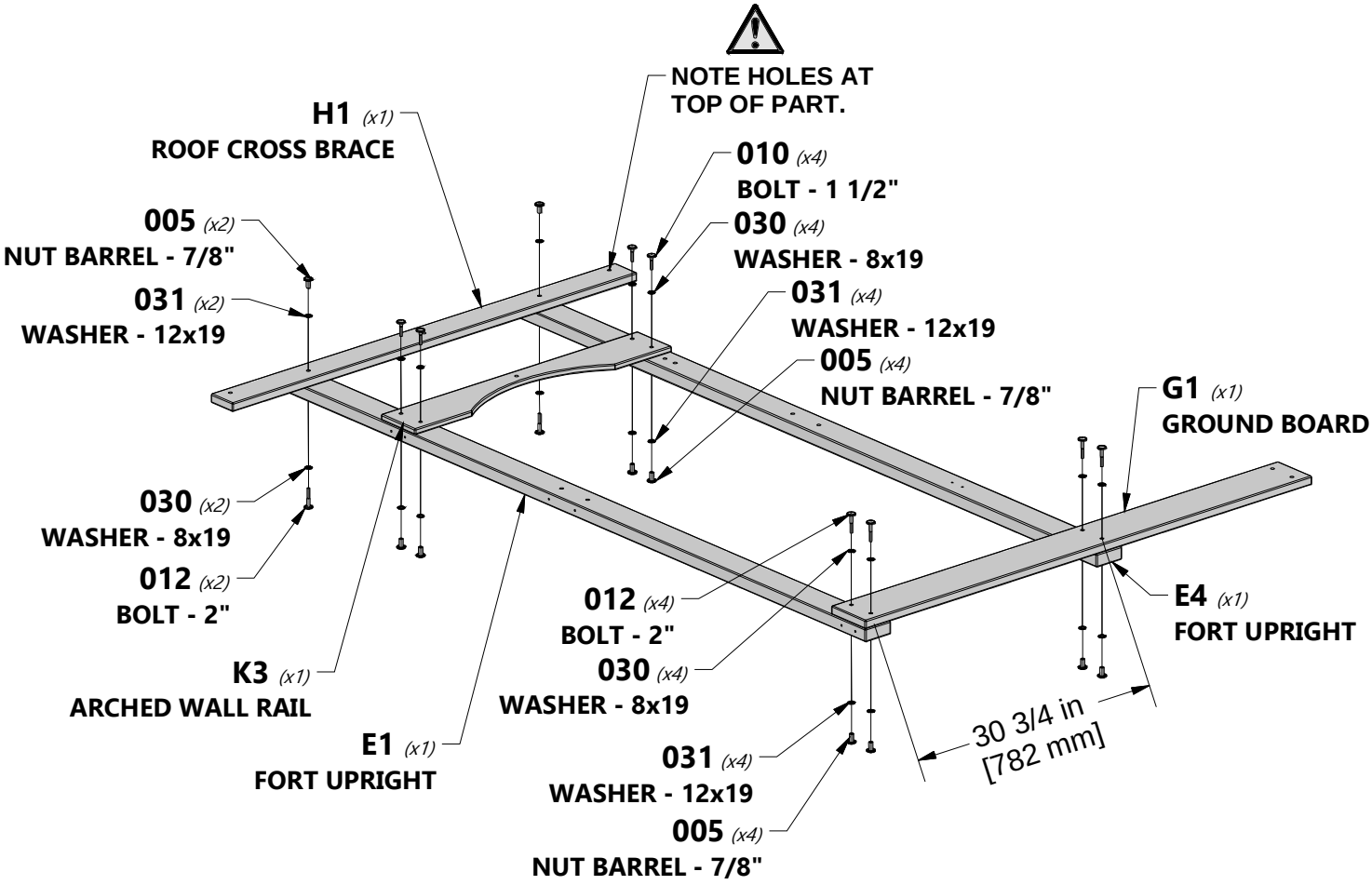

FORT ASSEMBLY

STEP 3

M3 (2) | TARP SUPPORT - W4L14163
5/8"x3 3/8"x36 3/4" (16x86x935)

M13 (1) | WALL RAIL - W4L14173
5/8"x3 3/8"x34 7/8" (16x86x887)

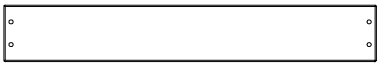

K1 (3) | WALL RAIL - W4L14157
5/8"x5 1/4"x34 7/8" (16x134x887)

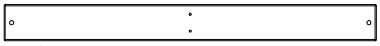

M5 (1) | WALL RAIL - W4L14165
5/8"x3 3/8"x34 7/8" (16x86x887)

M14 (1) | FLOOR/TARP SUPPORT - W4L14174
5/8"x3 3/8"x34 7/8" (16x86x887)

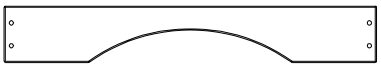

K2 (1) | ARCHED WALL RAIL - W4L14158
5/8"x5 1/4"x34 7/8" (16x134x887)

H100027 (20) | LAG SCREW WH
5/16x2

H100115 (4) | BOLT WH
5/16x1/2

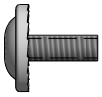

H100222 (4) | BOLT WH
5/16x3/4

H100005 (4) | NUT BARREL WH
5/16x7/8

H100086 (4) | SCREW PFH
8x1 1/2

H100030 (20) | WASHER LOCK EXT
8x19

H100031 (4) | WASHER LOCK EXT
12x19

H100074 (6) | T-NUT
5/16

A4M01046 (4) | L BRACKET 2.5x38x55x55

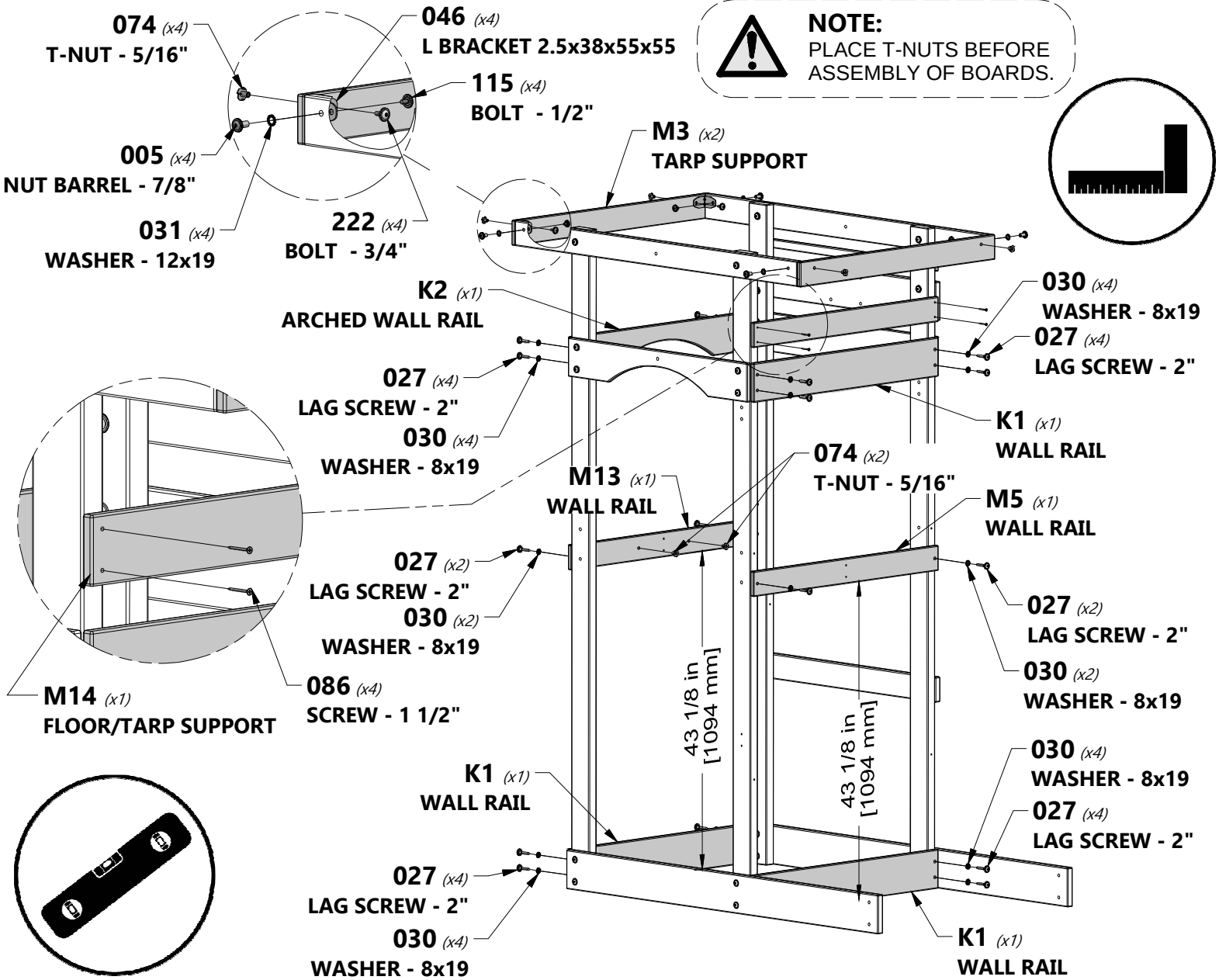

NOTE:
PLACE T-NUTS BEFORE ASSEMBLY OF BOARDS.

FORT ASSEMBLY

STEP 4

H2 (1) | FLOOR JOIST - W4L14144
1"x3 3/8"x34 1/8" (24x86x868)

H10 (4) | FLOOR BRACE - W4L14151
1"x3 3/8"x3 3/8" (24x86x86)

F1 (2) | ANGLE BRACE - W4L14138
1 3/8"x2 3/8"x18 1/8" (36x60x460)

H4 (1) | FLOOR BRACE - W4L14145
1"x3 3/8"x34 1/8" (24x86x868)

H11 (1) | FLOOR JOIST - W4L14152
1"x3 3/8"x34 1/8" (24x86x868)

H100015 (4) | BOLT WH *5/16x2 3/4*

H100013 (2) | BOLT WH *5/16x2 1/4*

H100146 (2) | LAG SCREW WH *1/4x2*

H100005 (4) | NUT BARREL WH *5/16x7/8*

H100074 (2) | T-NUT *5/16*

H100090 (4) | SCREW PFH *8x2 1/2"*

H100031 (4) | WASHER LOCK EXT *12x19*

H100030 (6) | WASHER LOCK EXT *8x19*

H100138 (2) | WASHER LOCK EXT *6x15*

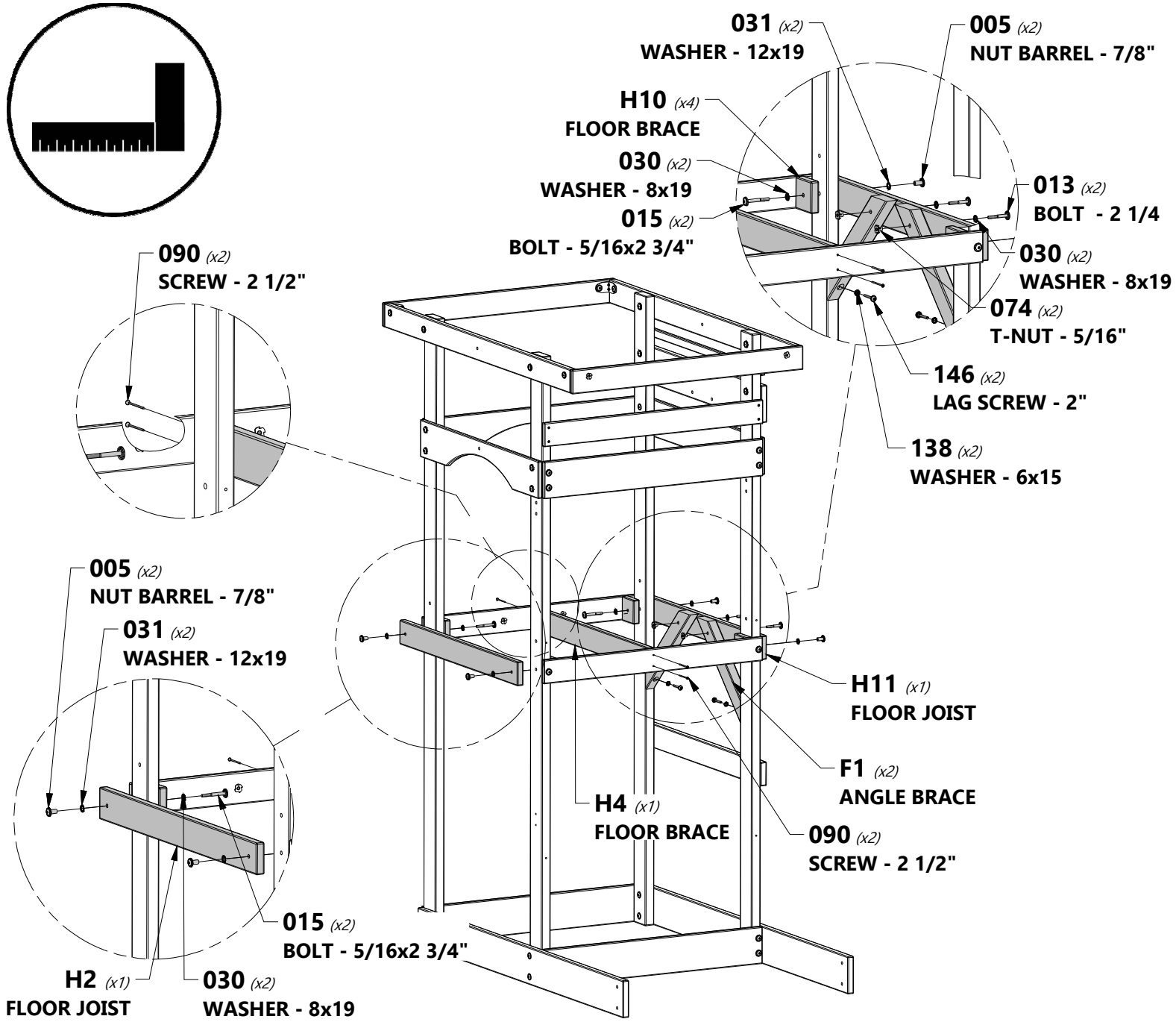

STEP 5

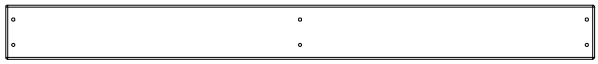

M2 *(8)* | **FLOOR BOARD - W4L14162**
5/8"x3 3/8"x36 3/4" (16x86x935)

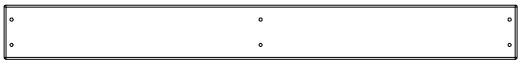

M7 *(2)* | **FLOOR BOARD - W4L14167**
5/8"x3 3/8"x32 1/8" (16x86x815)

H100086 *(60)* | **SCREW PFH**
8x1 1/2

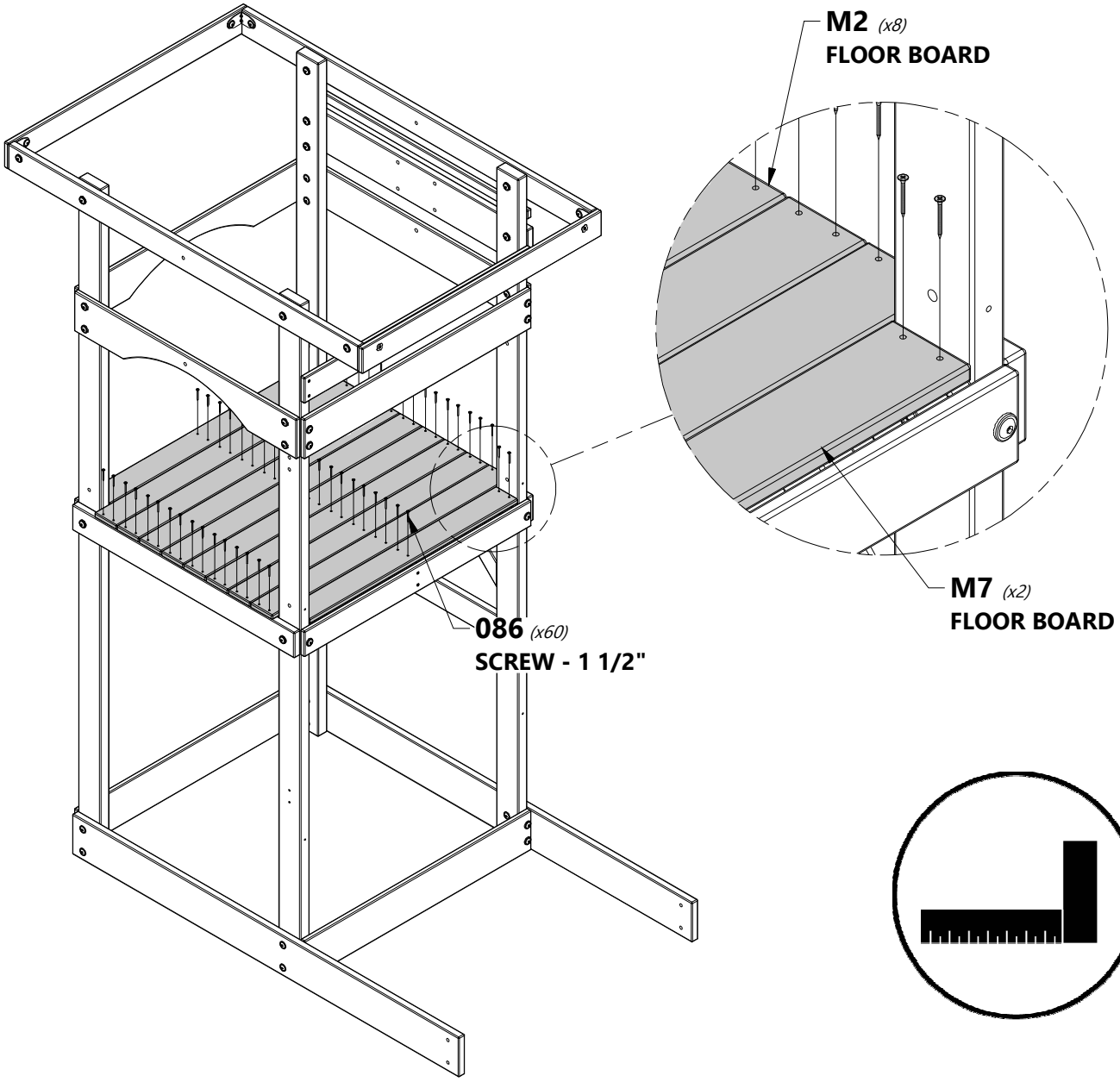

FORT ASSEMBLY

STEP 6

H2 (1) | **FLOOR JOIST - W4L14144**
1"x3 3/8"x34 1/8" (24x86x868)

M6 (1) | **WALL RAIL - W4L14166**
5/8"x3 3/8"x34 7/8" (16x86x887)

M10 (2) | **WALL RAIL - W4L14170**
5/8"x3 3/8"x6 1/4" (16x86x160)

M11 (2) | **WALL RAIL - W4L14171**
5/8"x3 3/8"x4 3/4" (16x86x122)

H100012 (2) | **BOLT WH**
5/16x2

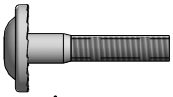

H100010 (2) | **BOLT WH**
5/16x1-1/2

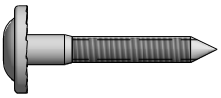

H100027 (4) | **LAG SCREW WH**
5/16x2

H100030 (8) | **WASHER LOCK EXT**
8x19

H100031 (4) | **WASHER LOCK EXT**
12x19

H100005 (4) | **NUT BARREL WH**
5/16x7/8

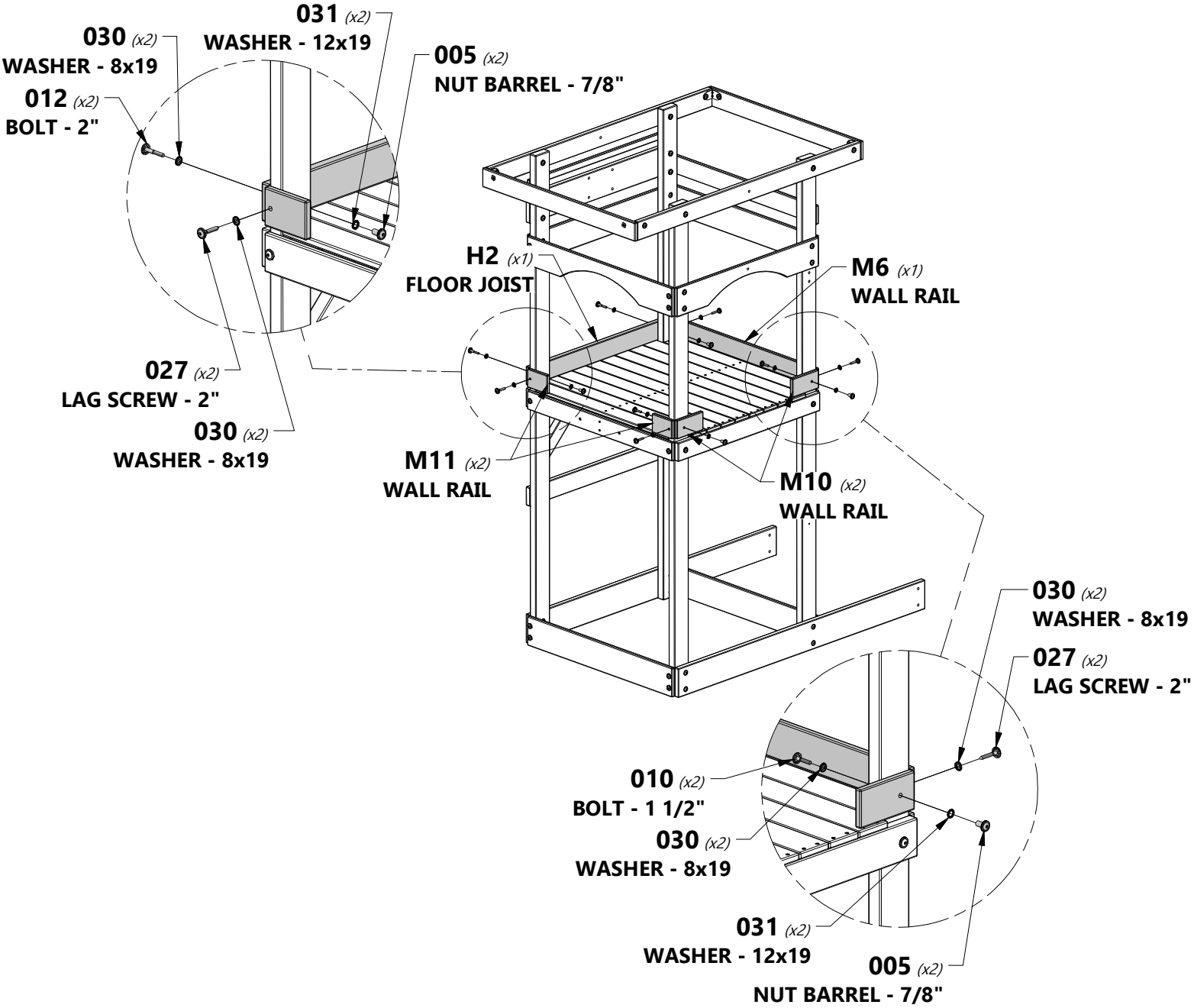

FORT ASSEMBLY

STEP 7

H6 (2) | **WALL SLAT - W4L14147**
1"x3 3/8"x25 1/2" (24x86x648)

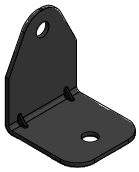

A100053 (2) | **L BRACKET 54x67 - GRN**

H100086 (8) | **SCREW PFH**
8x1 1/2

H100083 (4) | **SCREW TAPPING**
14x3/4

REPEAT FOR OTHER SIDE

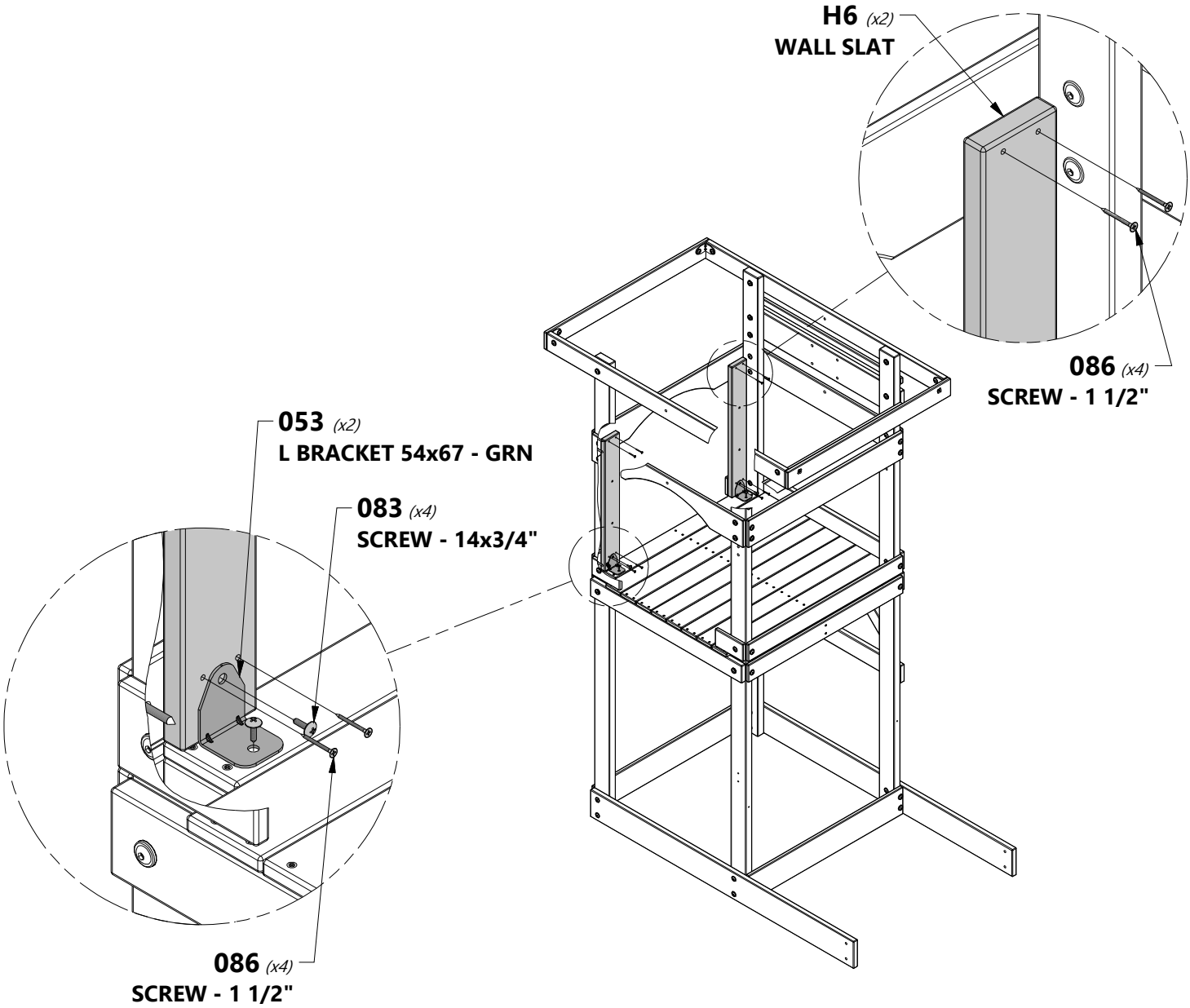

REPEAT FOR OTHER SIDE

STEP 8

M12 *(4)* | **WALL SLAT - W4L14172**
5/8"x3 3/8"x25 1/4" (16x86x640)

H100088 *(8)* | **SCREW PFH**
8x1 1/8

H100087 *(8)* | **SCREW PFH**
8x1 1/4

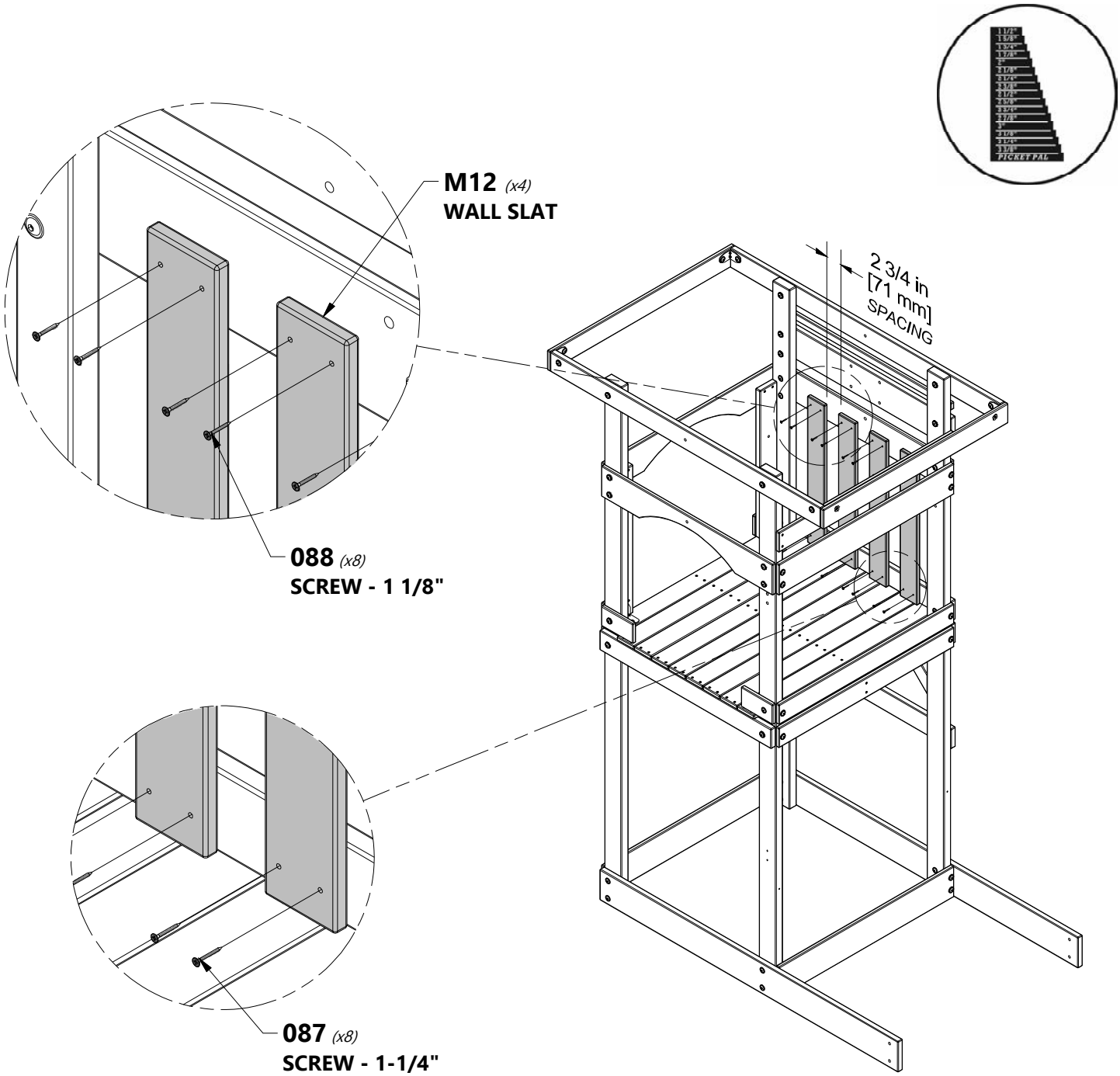

FORT ASSEMBLY

STEP 9

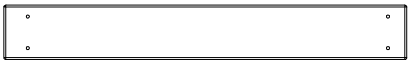

M12 (5) | **WALL SLAT - W4L14172**
5/8"x3 3/8"x25 1/4" (16x86x640)

J1 (2) | **WALL SLAT - W4L14156**
1"x2 3/8"x25 1/2" (24x60x648)

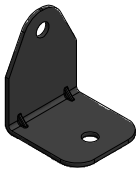

A100053 (2) | **L BRACKET 54x67 - GRN**

H100088 (20) | **SCREW PFH**
8x1 1/8

H100086 (8) | **SCREW PFH**
8x1 1/2

H100083 (4) | **SCREW TAPPING**
14x3/4

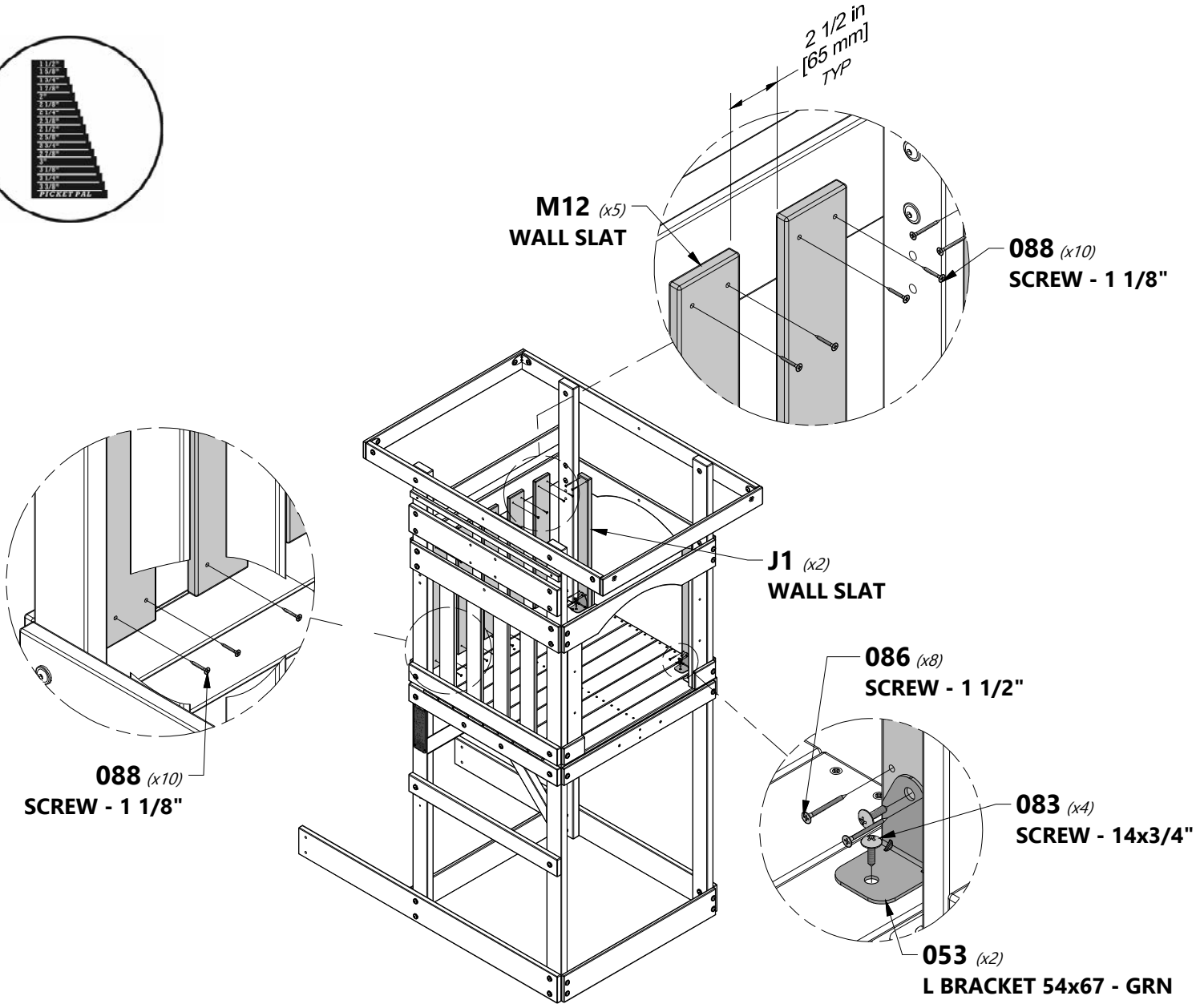

FORT ASSEMBLY

STEP 10

1 1/8 in
[27 mm]

H5 (2) | **PICNIC TARP SUPPORT - W4L14146**
1"x3 3/8"x24 1/2" (24x86x622)

M3 (1) | **TARP SUPPORT - W4L14163**
5/8"x3 3/8"x36 3/4" (16x86x935)

A4M01046 (2) | **L BRACKET 2.5x38x55x55**

H100012 (4) | **BOLT WH**
5/16x2

H100031 (6) | **WASHER LOCK EXT**
12x19

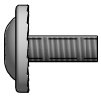

H100222 (2) | **BOLT WH**
5/16x3/4

H100115 (2) | **BOLT WH**
5/16x1/2

H100030 (4) | **WASHER LOCK EXT**
8x19

H100005 (6) | **NUT BARREL WH**
5/16x7/8

H100074 (2) | **T-NUT**
5/16

005 *(x4)*
NUT BARREL - 7/8"

031 *(x4)*
WASHER - 12x19

H5 *(x2)*
PICNIC TARP SUPPORT

012 *(x4)*
BOLT - 2"

030 *(x4)*
WASHER - 8x19

M3 *(x1)*
TARP SUPPORT

222 *(x2)*
BOLT - 3/4"

115 *(x2)*
BOLT - 1/2"

074 *(x2)*
T-NUT - 5/16"

005 *(x2)*
NUT BARREL - 7/8"

046 *(x2)*
L BRACKET 2.5x38x55x55

031 *(x2)*
WASHER - 12x19

STEP 11

F2 (2) | **ANGLE BRACE - W4L14139**
1 3/8"x2 3/8"x12 1/4" (36x60x310)

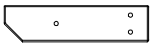

H8 (2) | **PICNIC SUPPORT - W4L14149**
1"x3 3/8"x13 1/2" (24x86x344)

M8 (1) | **PICNIC CLEAT - W4L14168**
5/8"x3 3/8"x10 1/8" (16x86x258)

M2 (3) | **FLOOR BOARD - W4L14162**
5/8"x3 3/8"x36 3/4" (16x86x935)

H100013 (2) | **BOLT WH**
5/16x2 1/4

H100027 (4) | **LAG SCREW WH**
5/16x2

H100146 (2) | **LAG SCREW WH**
1/4x2

H100030 (6) | **WASHER LOCK EXT**
8x19

H100088 (6) | **SCREW PFH**
8x1 1/8

H100086 (12) | **SCREW PFH**
8x1 1/2

H100074 (2) | **T-NUT**
5/16

H100138 (2) | **WASHER LOCK EXT**
6x15

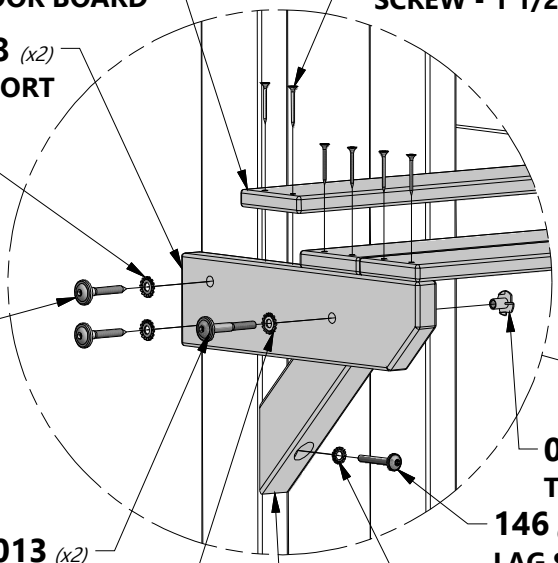

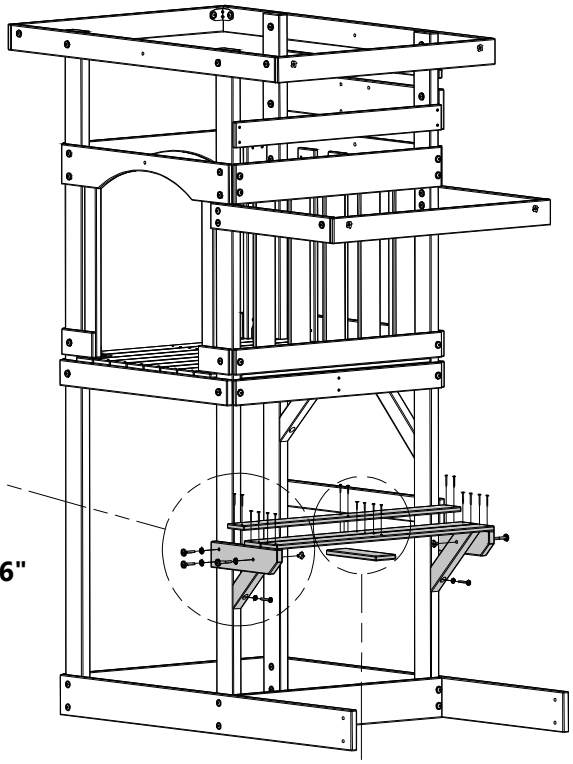

TIP:
WE RECOMMEND INSTALLING T-NUTS INTO BOARDS BEFORE ASSEMBLY.

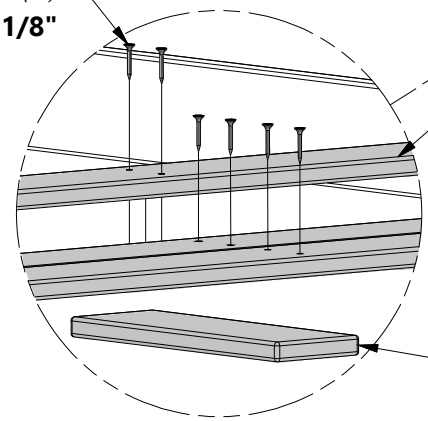

FORT ASSEMBLY

STEP 12

G3 (2) | **PICNIC SUPPORT - W4L14142**
1"x5 1/4"x5 1/4" (24x134x134)

H9 (2) | **PICNIC SUPPORT - W4L14150**
1"x3 3/8"x6 3/4" (24x86x172)

H7 (2) | **PICNIC SUPPORT - W4L14148**
1"x3 3/8"x15 1/4" (24x86x387)

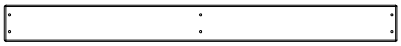

H12 (2) | **SEAT BOARD - W4L14346**
1"x3 3/8"x36 3/4" (24x86x935)

M9 (1) | **PICNIC CLEAT - W4L14169**
5/8"x3 3/8"x6 3/4" (16x86x172)

H100086 (4) | **SCREW PFH**
8x1 1/2

H100030 (8) | **WASHER LOCK EXT**
8x19

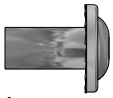

H100005 (8) | **NUT BARREL WH**
5/16x7/8

H100010 (8) | **BOLT WH**
5/16x1-1/2

H100089 (14) | **SCREW PFH**
8x1 3/4

H100031 (8) | **WASHER LOCK EXT**
12x19

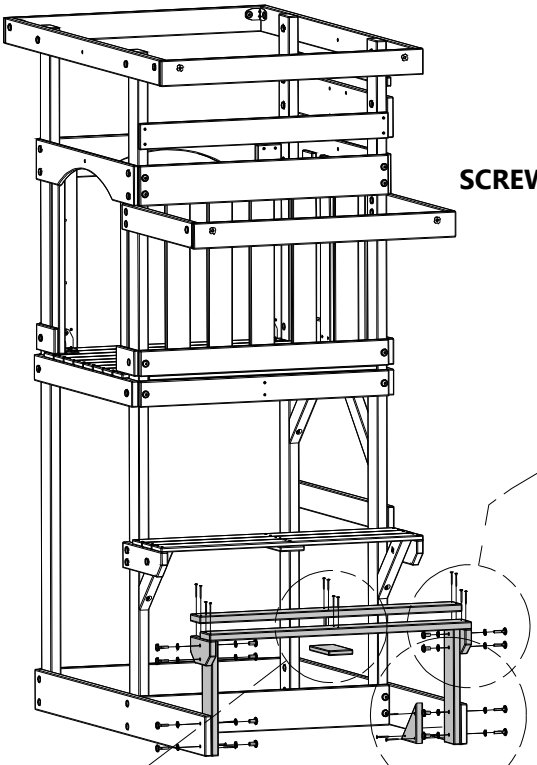

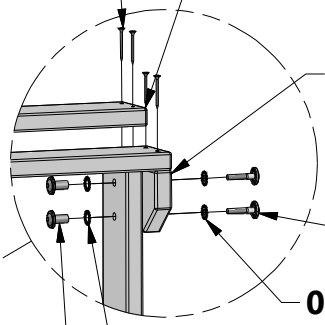

089 *(x8)*
SCREW - 1 3/4"

H12 *(x2)*
SEAT BOARD

H9 *(x2)*
PICNIC SUPPORT

010 *(x4)*
BOLT - 1 1/2"

030 *(x4)*
WASHER - 8x19

031 *(x4)*
WASHER - 12x19

005 *(x4)*
NUT BARREL - 7/8"

086 *(x4)*
SCREW - 1 1/2"

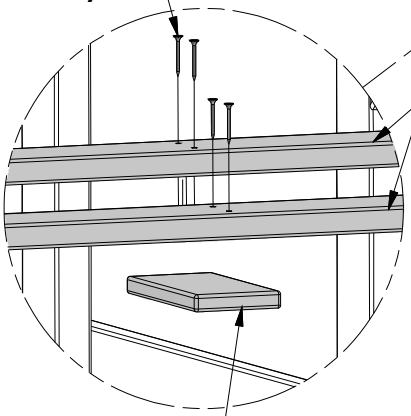

H12
SEAT BOARD

M9 *(x1)*
PICNIC CLEAT

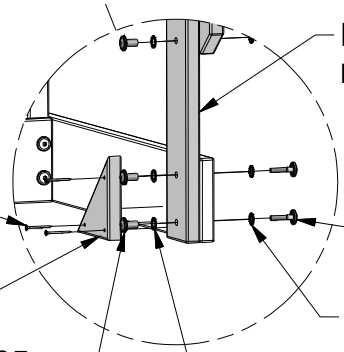

H7 *(x2)*
PICNIC SUPPORT

089 *(x6)*
SCREW - 1 3/4"

G3 *(x2)*
PICNIC SUPPORT

005 *(x4)*
NUT BARREL - 7/8"

010 *(x4)*
BOLT - 1 1/2"

030 *(x4)*
WASHER - 8x19

031 *(x4)*
WASHER - 12x19

FORT ASSEMBLY

STEP 13

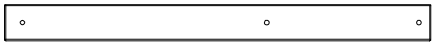

M1 (2) | **TARP SUPPORT - W4L14161**
5/8"x3 3/8"x40" (16x86x1016)

M4 (1) | **FLOOR/TARP SUPPORT - W4L14164**
5/8"x3 3/8"x34 7/8" (16x86x887)

A4M01046 (2) | **L BRACKET 2.5x38x55x55**

H100008 (4) | **BOLT WH**
5/16x1

H100030 (4) | **WASHER LOCK EXT**
8x19

H100222 (2) | **BOLT WH**
5/16x3/4

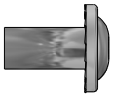

H100005 (2) | **NUT BARREL WH**
5/16x7/8

H100074 (2) | **T-NUT**
5/16

H100115 (2) | **BOLT WH**
5/16x1/2

H100031 (6) | **WASHER LOCK EXT**
12x19

H100004 (4) | **NUT BARREL WH**
5/16 x 5/8

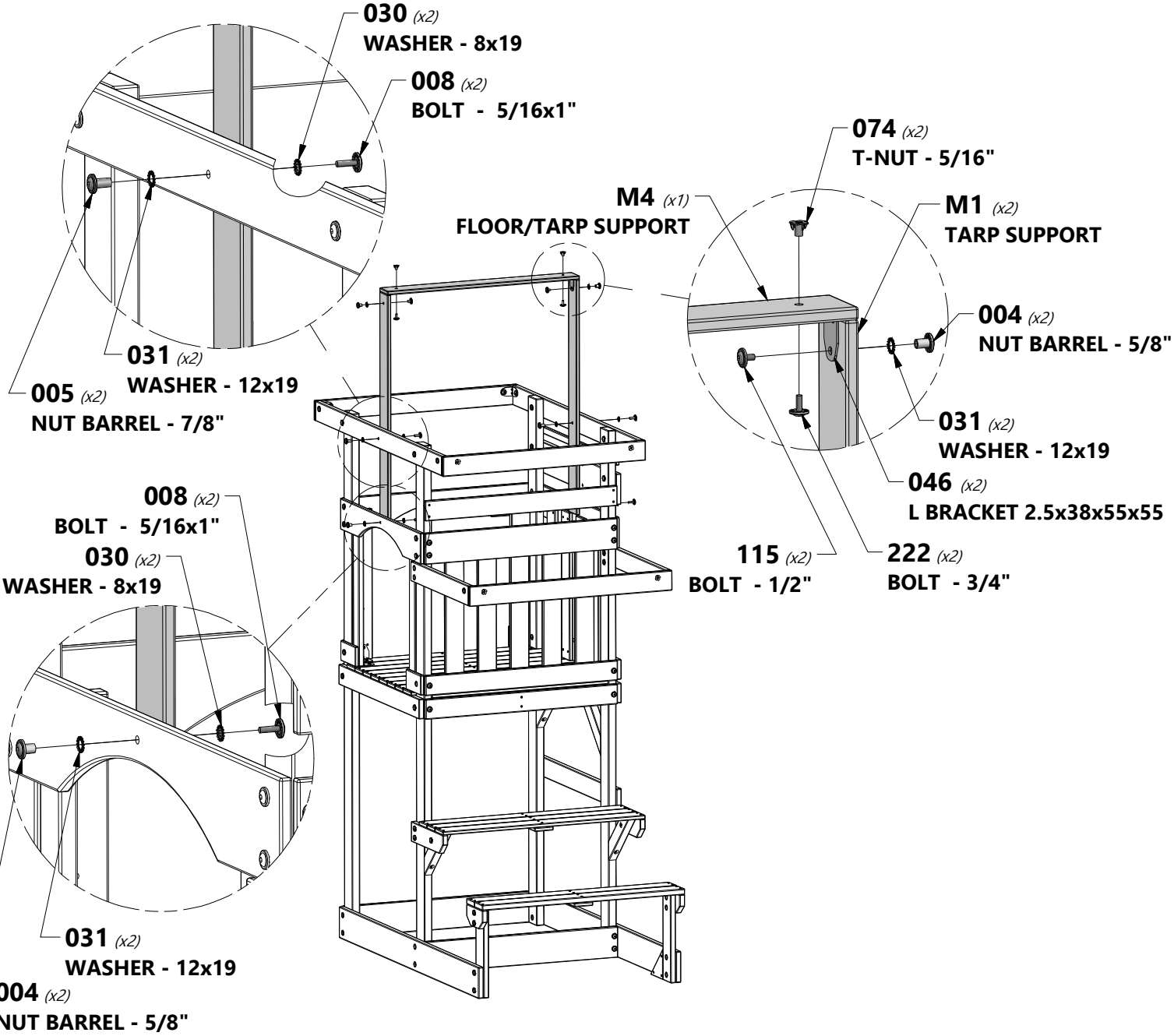

STEP 14

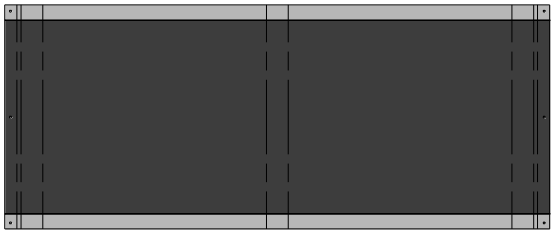

A100196 *(1)* | ROOF TARP

H100128 *(6)* | SCREW PWH *8x5/8*

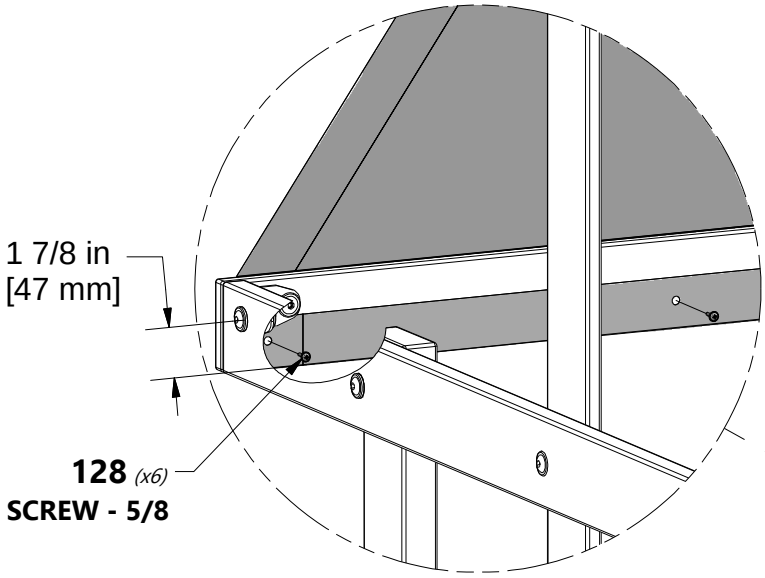

REPEAT FOR OTHER SIDE

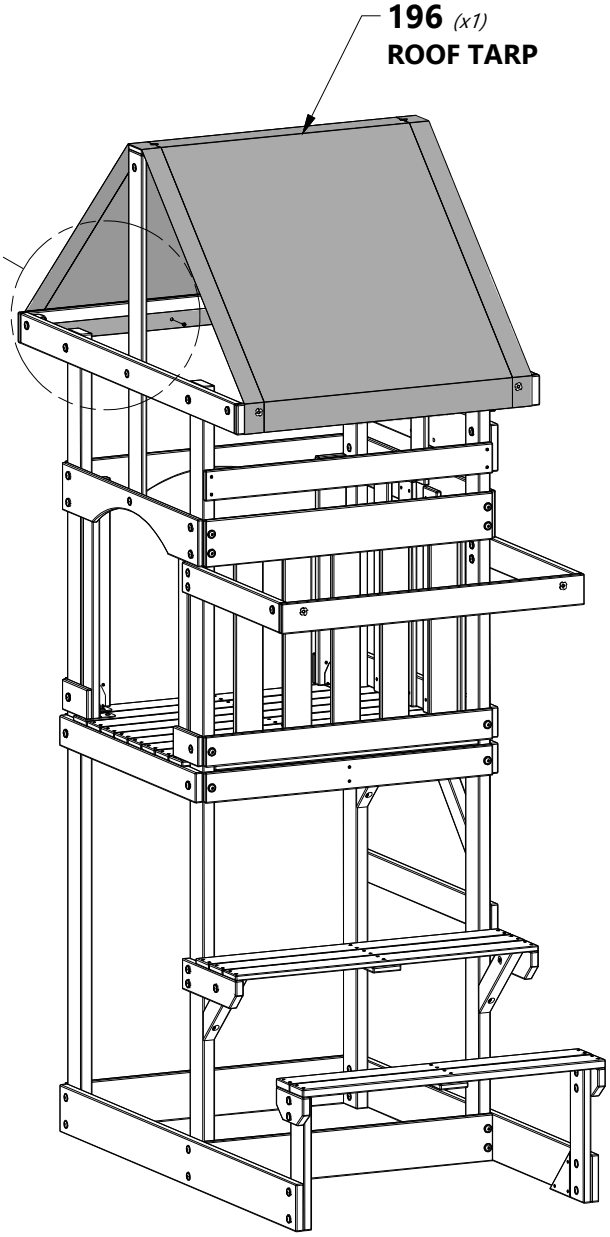

STEP 15

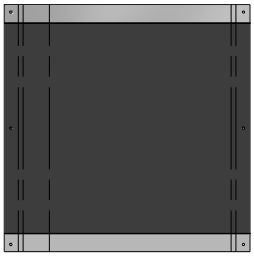

A100195 *(1)* | **PICNIC TABLE TARP**

H100128 *(6)* | **SCREW PWH** ***8x5/8***

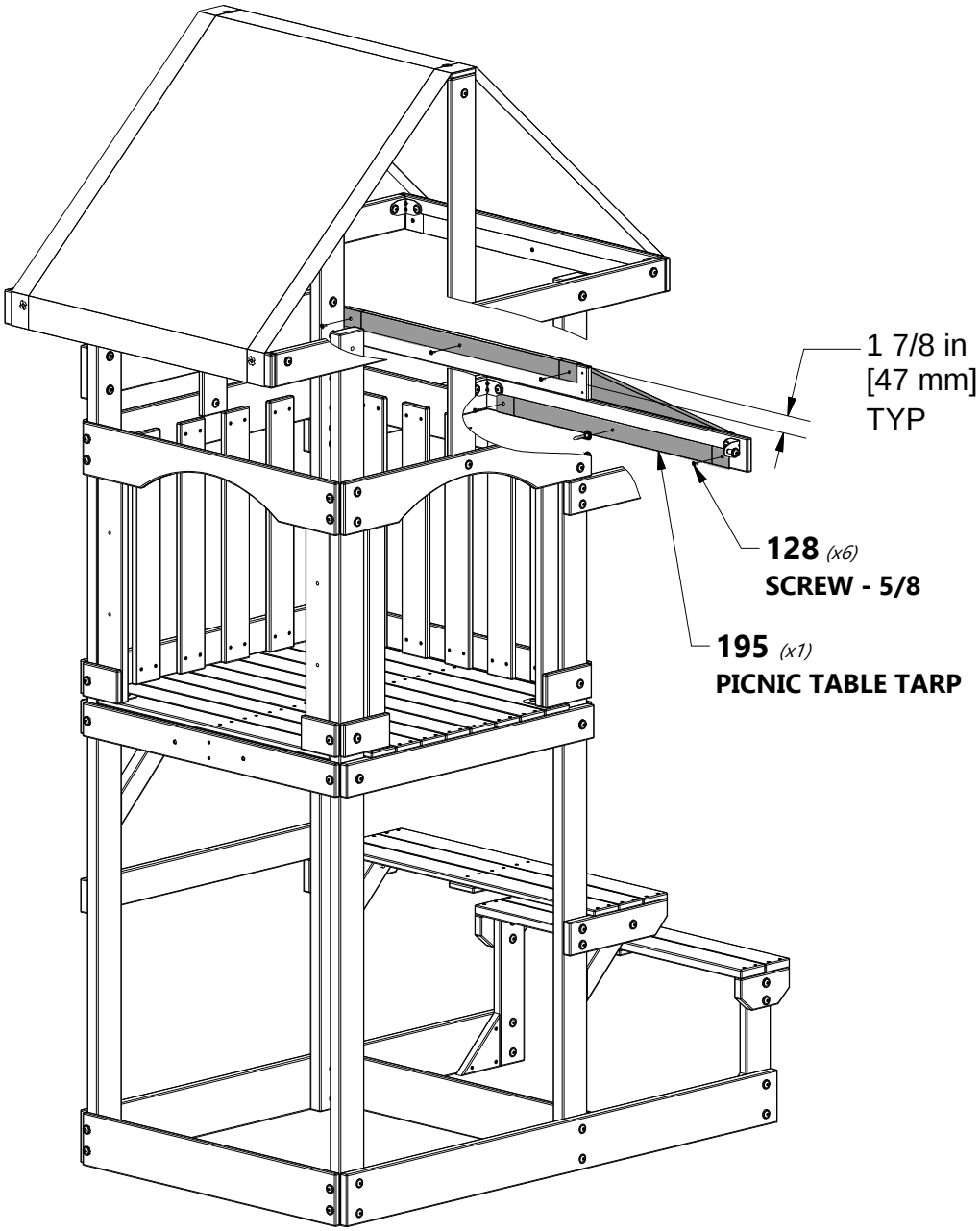

STEP 16

A6P00303 *(2)* | HAND GRIP YELLOW PLASTIC

H100062 *(4)* | BOLT PTH *1/4x1 1/4*

H100108 *(4)* | WASHER LOCK INT *8x15*

H100106 *(4)* | WASHER FLAT *9x18*

H100072 *(4)* | T-NUT *1/4*

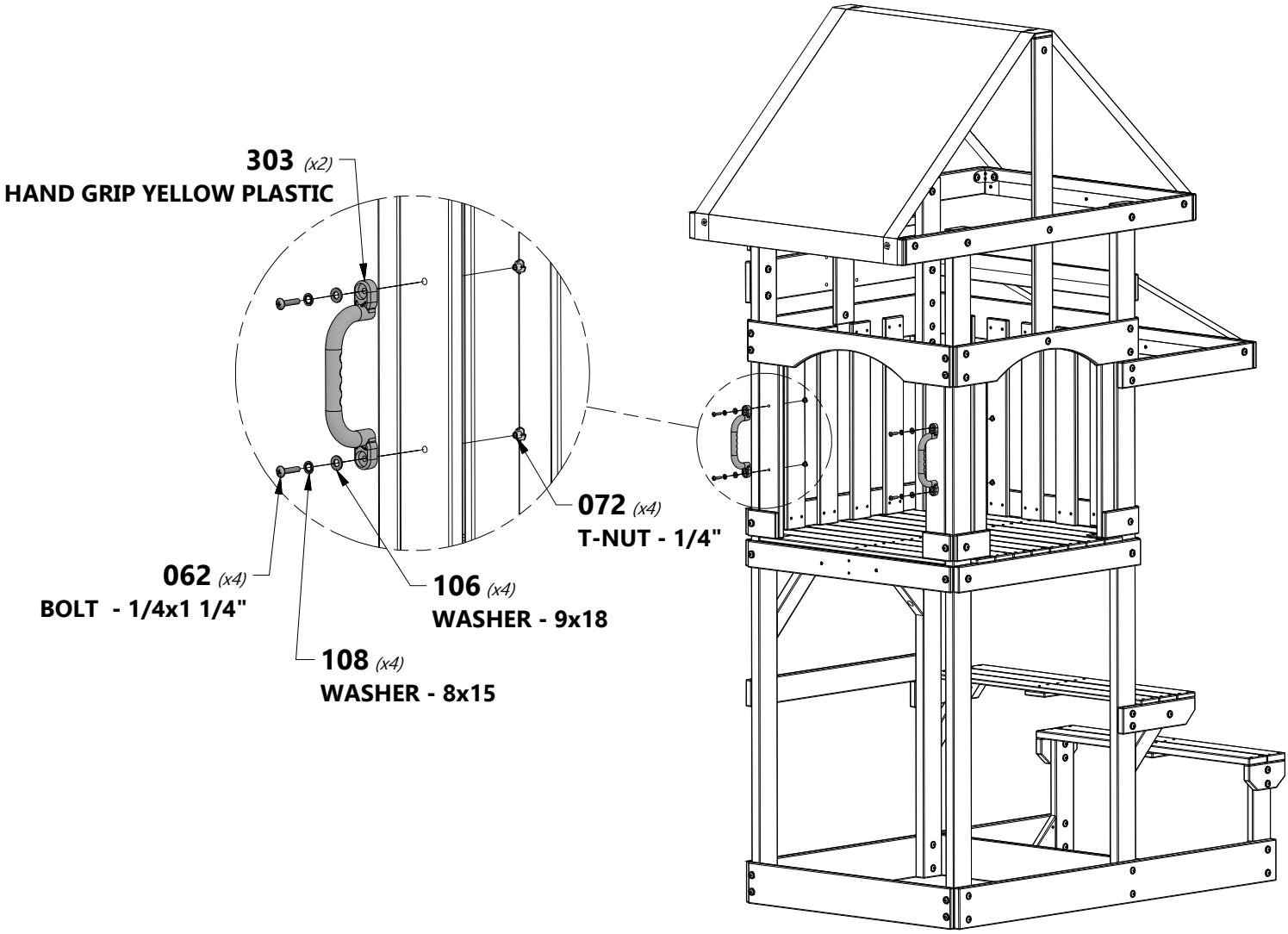

STEP 17

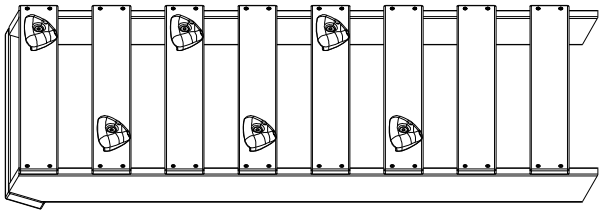

(1) **4 FT ROCK LADDER**

H100010 ***(2)*** | **BOLT WH** ***5/16x1-1/2***

H100030 ***(2)*** | **WASHER LOCK EXT** ***8x19***

TEMPORARY REMOVAL OF TOP RUNG MAY BE NECESSARY DURING ROCK LADDER INSTALLATION.

010 *(x2)*
BOLT - 1 1/2"

030 *(x2)*
WASHER - 8x19

STEP 18

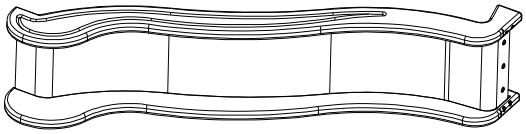

9198128 | **8 FT - FLAT PACK SLIDE**
(1)

H100115 | **BOLT WH**
(3) | ***5/16x1/2***

H100074 | **T-NUT**
(3) | ***5/16***

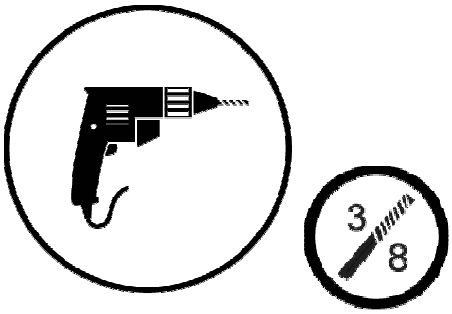

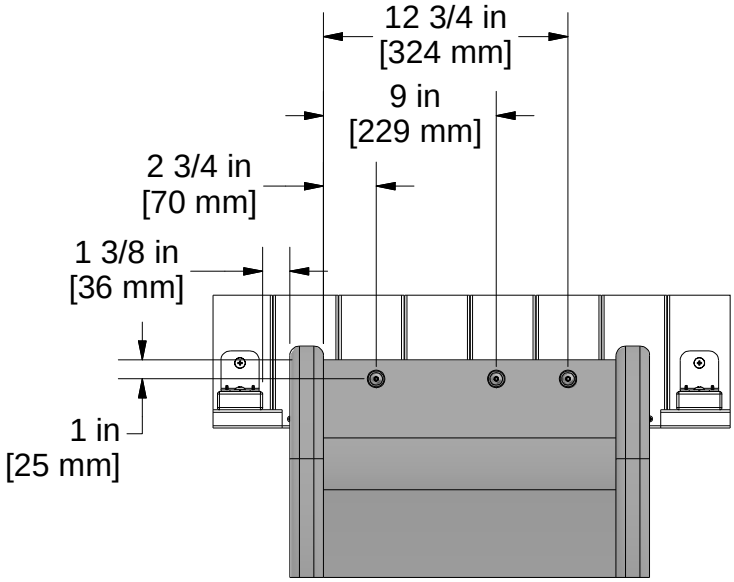

SLIDE BED
DRILLING PATTERN

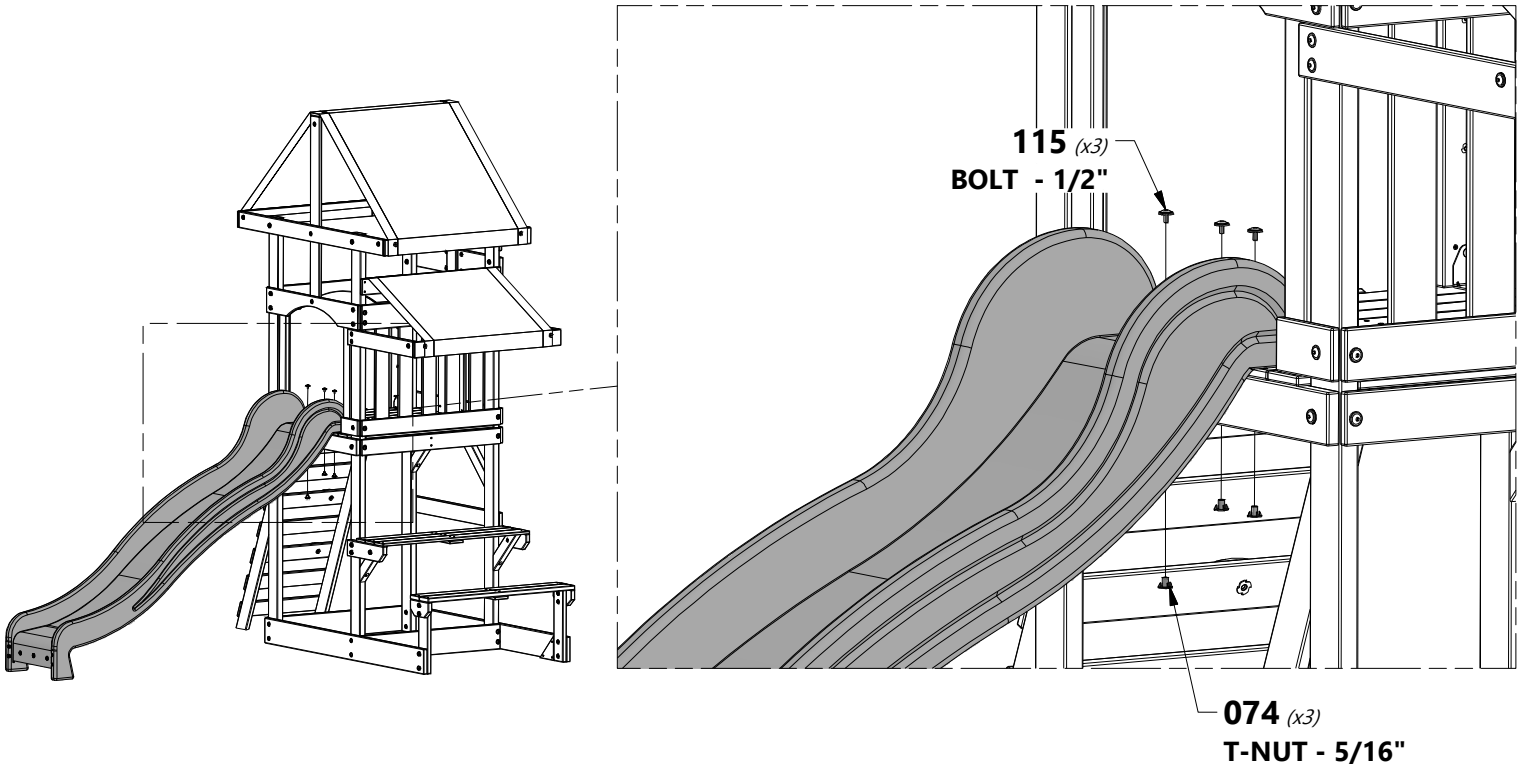

FORT ASSEMBLY

STEP 19

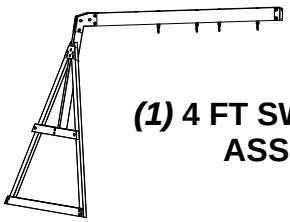

(1) **4 FT SWING BEAM ASSEMBLY**

A100164 ***(1)*** | **BYD ID TAG (LARGE) AGES 3-10**

A100314 ***(1)*** | **"A" REVISION TAG**

H100042 ***(4)*** | **BOLT HEX** ***5/16x1 1/4***

H100095 ***(4)*** | **WASHER SPLIT** ***5/16***

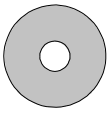

H100105 ***(4)*** | **WASHER FLAT** ***8x27***

H100074 ***(4)*** | **T-NUT** ***5/16***

H100128 ***(6)*** | **SCREW PWH** ***8x5/8***

NOTE:
INSERT T-NUTS BEFORE ATTACHMENT OF SWING BEAM.

074 *(x4)*
T-NUT - 5/16"

042 *(x4)*
BOLT HEX - 1 1/4"

095 *(x4)*
WASHER - 5/16"

105 *(x4)*
WASHER - 8x27

128 *(x4)*
SCREW - 5/8

164 *(x1)*
BYD ID TAG (LARGE) AGES 3-10

128 *(x2)*
SCREW - 5/8

314 *(x1)*
"A" REVISION TAG

STEP 20

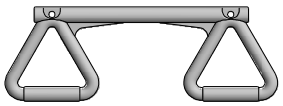

A6P00034 *(1)* | TRAPEZE YELLOW

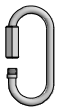

A100069 *(6)* | QUICK LINK

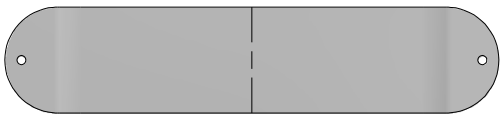

A100070 *(2)* | SWING SEAT YELLOW 26"

A100177 *(2)* | CHAIN GREEN 31"

A100068 *(4)* | CHAIN GREEN 51.25"

INSERT CHAIN ONTO QUICK LINK SWING HANGER, THEN TIGHTEN SWING HANGER COUPLING.

177 *(x2)*
CHAIN GREEN 31"

069 *(x2)*
QUICK LINK

034 *(x1)*
TRAPEZE YELLOW

068 *(x4)*
CHAIN GREEN 51.25"

069 *(x4)*
QUICK LINK

070 *(x2)*
SWING SEAT YELLOW 26"

STEP 21

A100178 (6) | AUGER GROUND STAKE

H100008 (6) | BOLT WH 5/16x1

H100031 (6) | WASHER LOCK EXT 12x19

H100004 (6) | NUT BARREL WH 5/16 x 5/8

NOTE:
FAILURE TO USE GROUND STAKES CAN VOID WARRANTY AND CAUSE INJURY!

1. TWIST AUGER GROUND STAKE INTO THE GROUND NEXT TO THE GROUND BOARD, IN THE LOCATIONS SHOWN.

2. USE HARDWARE PROVIDED TO SECURE THE AUGER GROUND STAKE TO THE GROUND BOARD.

3. MAKE SURE ALL BOLTS, SCREWS, AND NUTS ARE TIGHTENED. MAKE SURE EVERY BOARD IS SECURED. MAKE SURE YOUR SWING SET IS LEVEL. ENJOY THE USE OF YOUR NEW SWING SET!

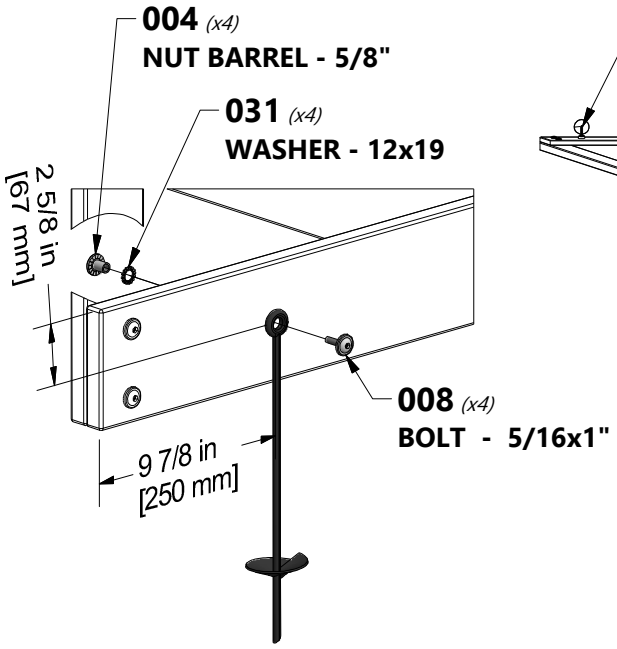

FORT STAKES

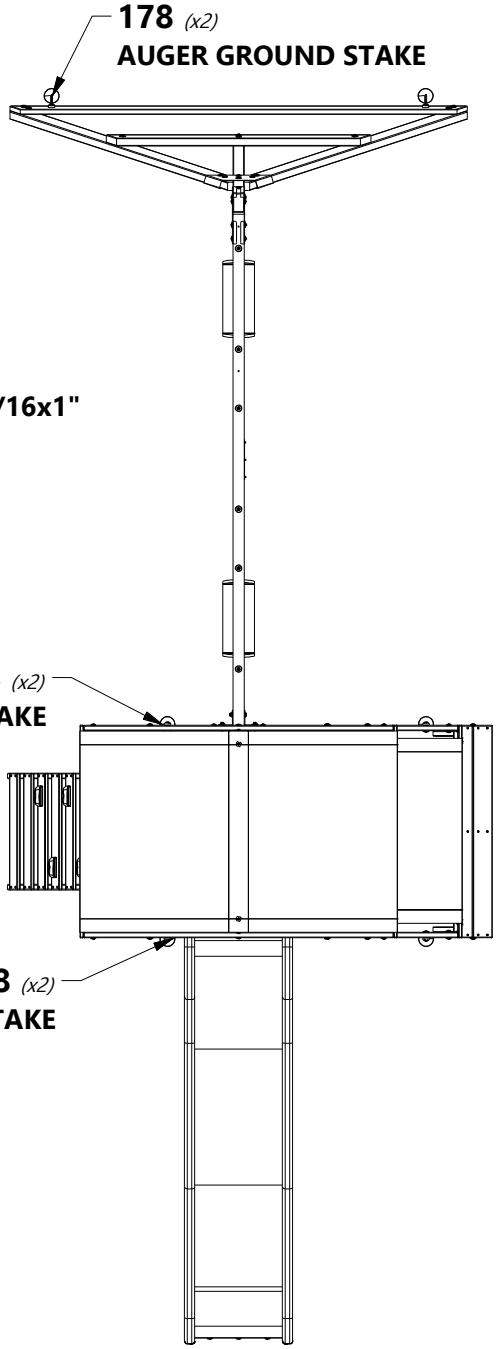

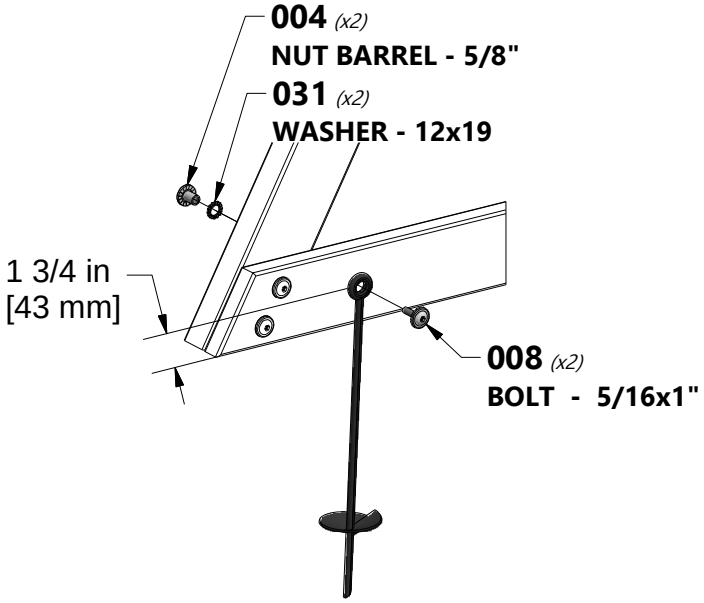

SWING BEAM STAKES