ASSEMBLY INSTRUCTIONS

Trestle Dining Table
277238-2608

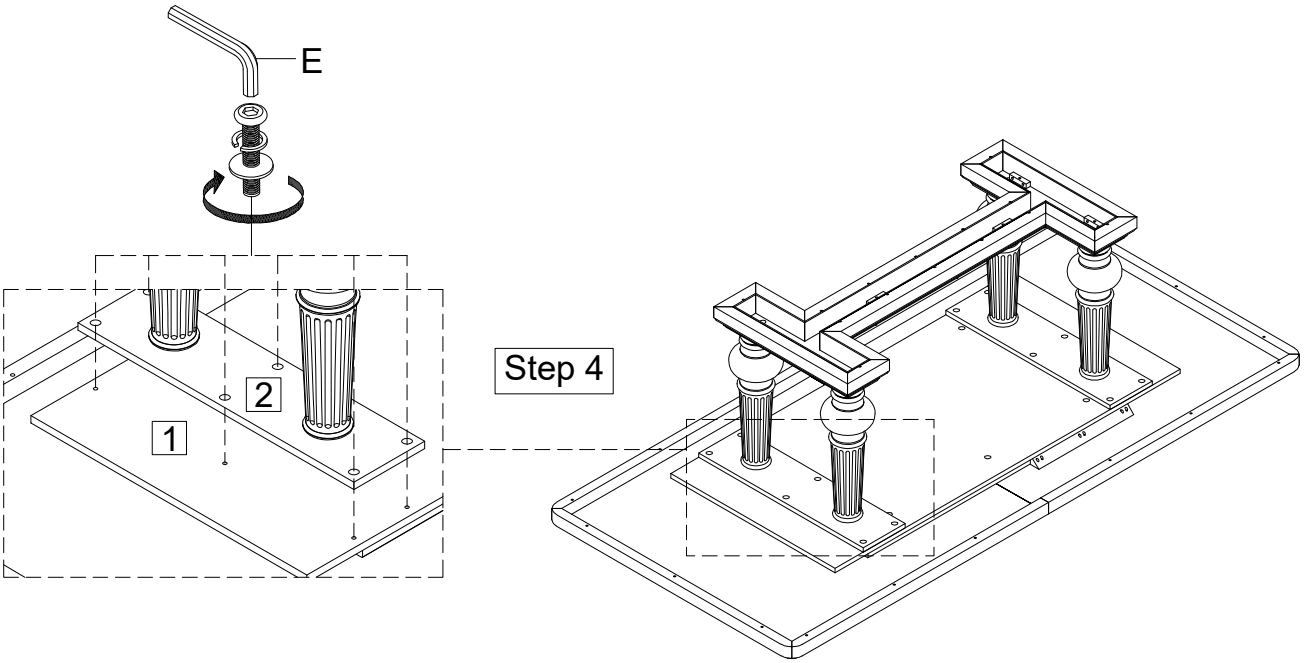

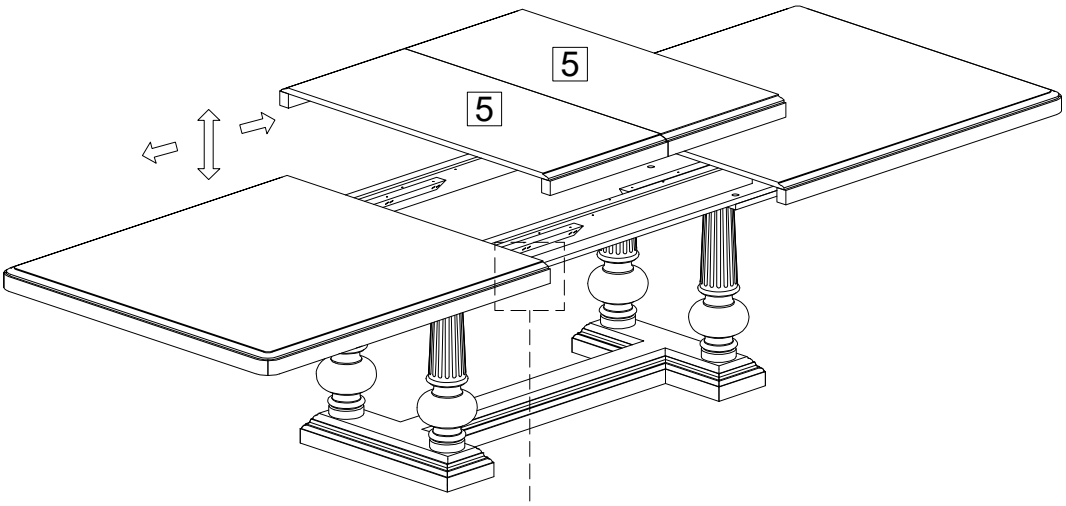

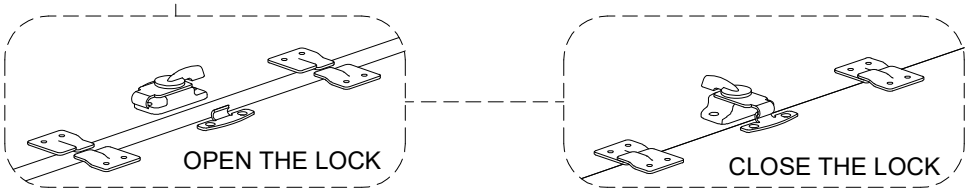

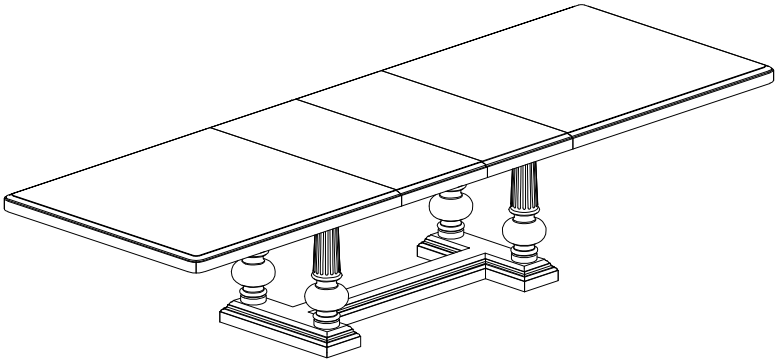

! KEEP THESE INSTRUCTIONS FOR FUTURE REFERENCE !