Assembly Instructions

Friendly Reminder:

1. Patience with Cushions: The cushions are vacuum-sealed and may look wrinkled at first— don't worry! Give them up to 72 hours to air out, and they'll plump up to their full, comfy shape.

2. Build First, Unpack After: For the easiest setup, assemble the sofa frame completely before unsealing the compressed cushions.

3. Need Help? If any parts are missing or damaged (please take photos for reference), feel free to contact us—our support team will assist you promptly!

Thanks for choosing us—Your comfort zone starts here!

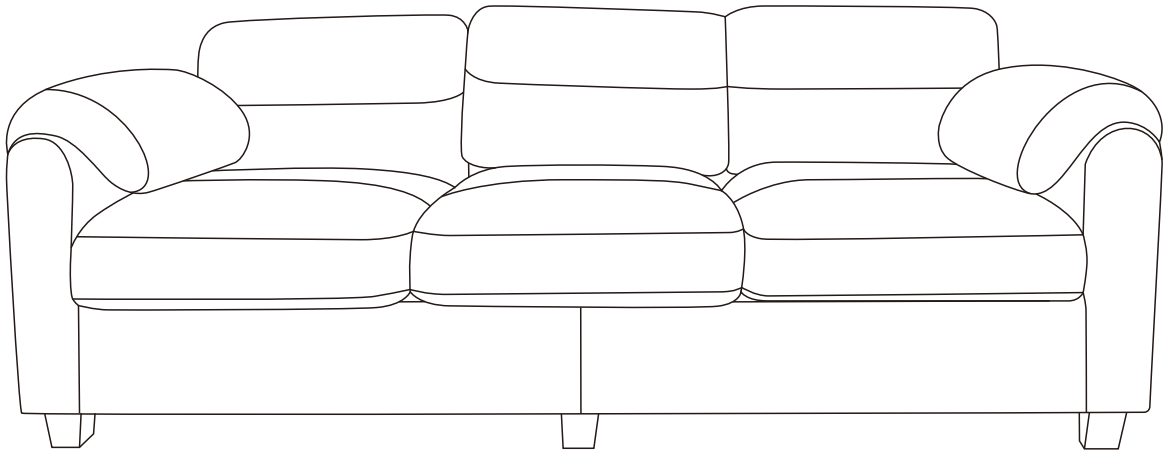

PARTS LIST

A  x3	**B** 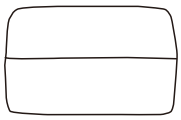 x3	**C**  x2	**D** 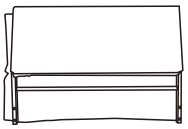 x1
E  x1	**F**  x1	**G**  x1	**H** 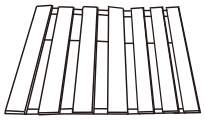 x2
I  x1	**J**  x2	**K** 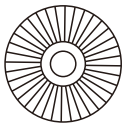 x6	**L** 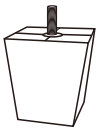 x6
M  x2			

HARDWARE

1  1pc	**2** 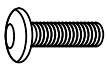 M6*40MM 4+1pcs	**3**  M6*18MM 20+1pcs

STEP1:

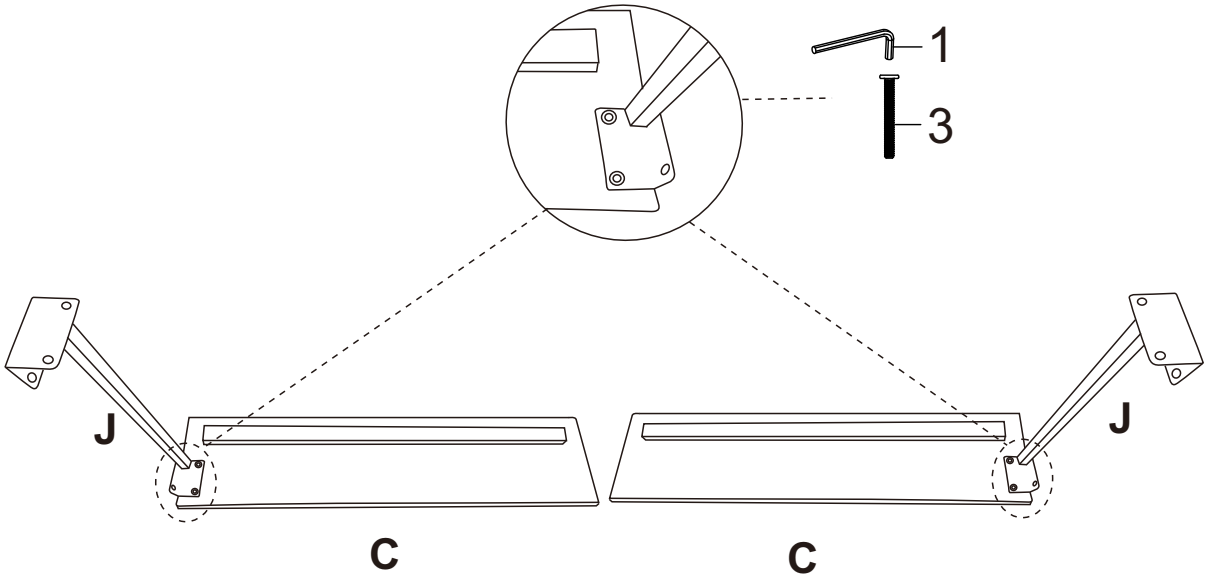

STEP2:

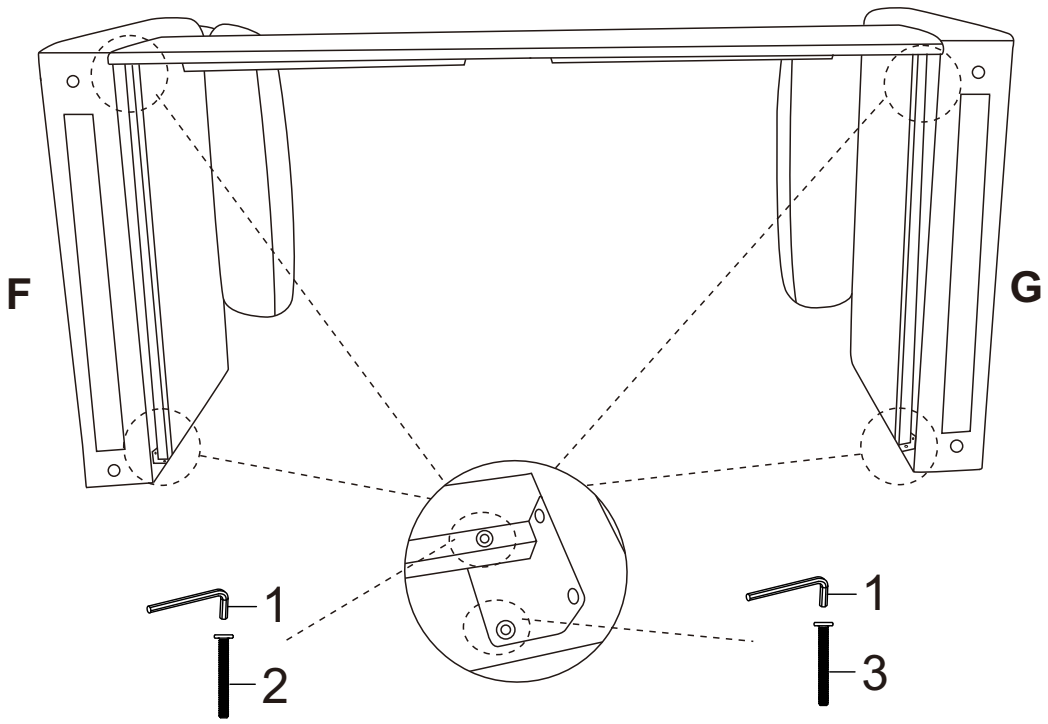

STEP3:

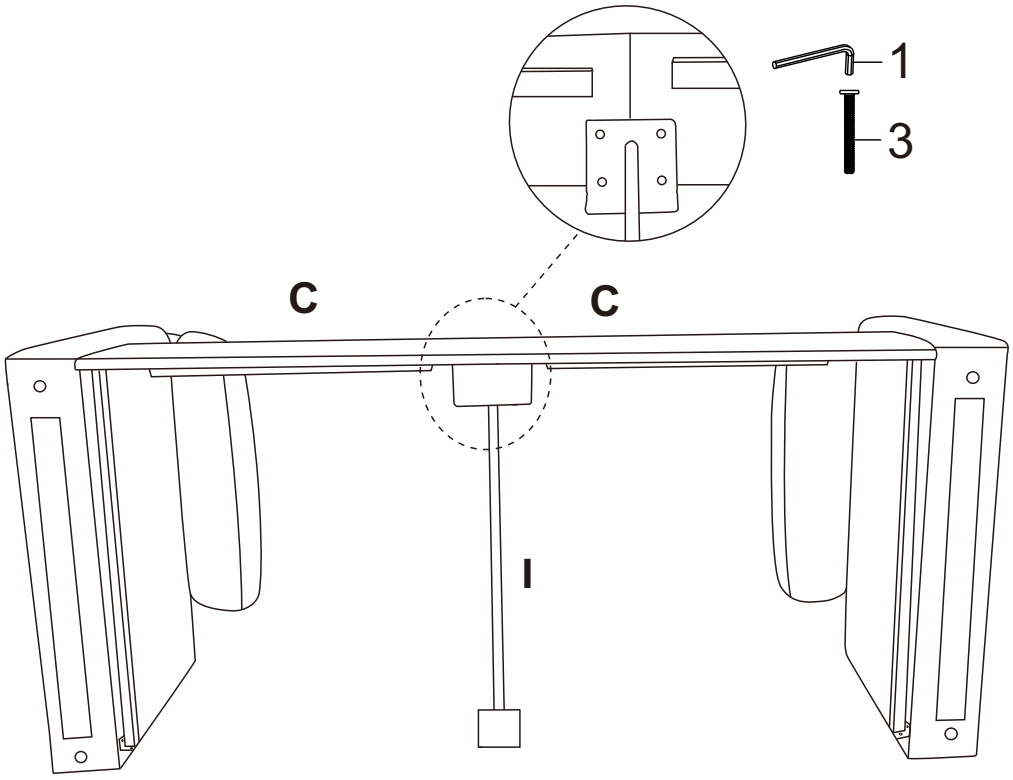

UsePart 1 and Part 3(4pcs) to mount Part I onto Section C,Tighten all four screws to 50% torque first, then torque all of them to 100% evenly together.

STEP4:

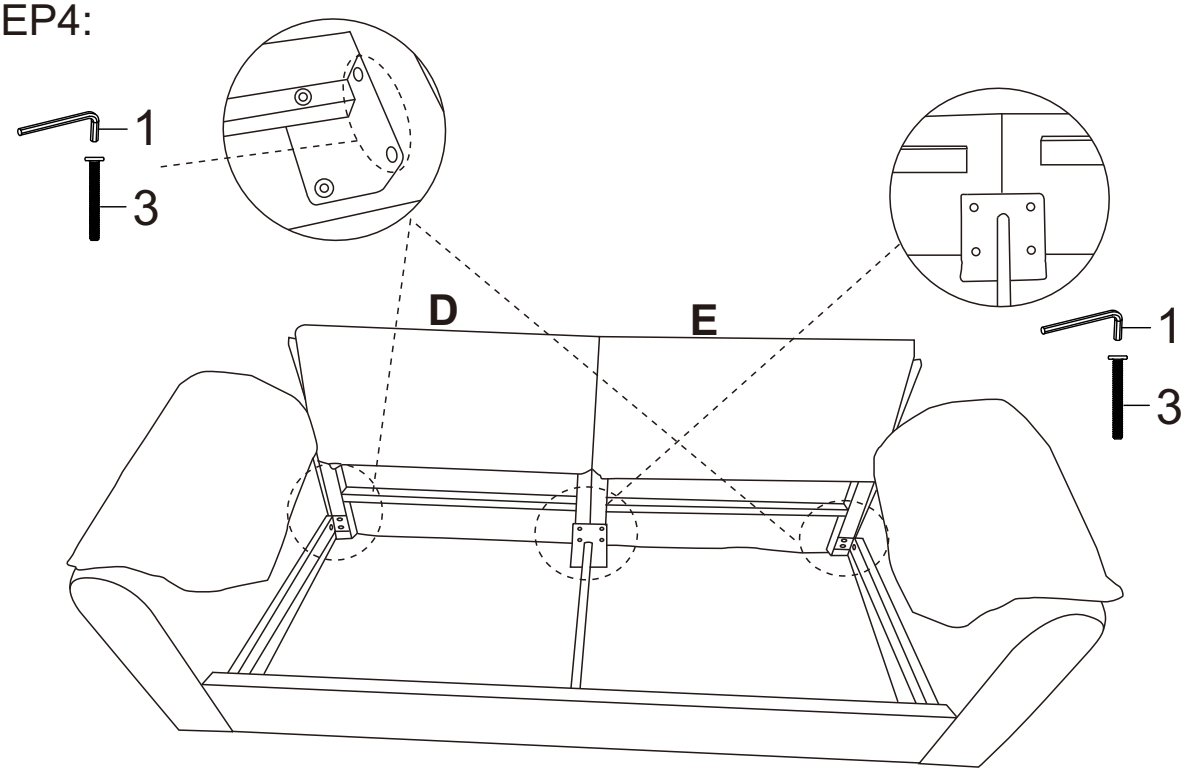

Use Part 1 and Part 3(4pcs) to mount Part I onto Section D and Section E, Tighten all four screws to 50% torque first, then torque all of them to 100% evenly together.

STEP5:

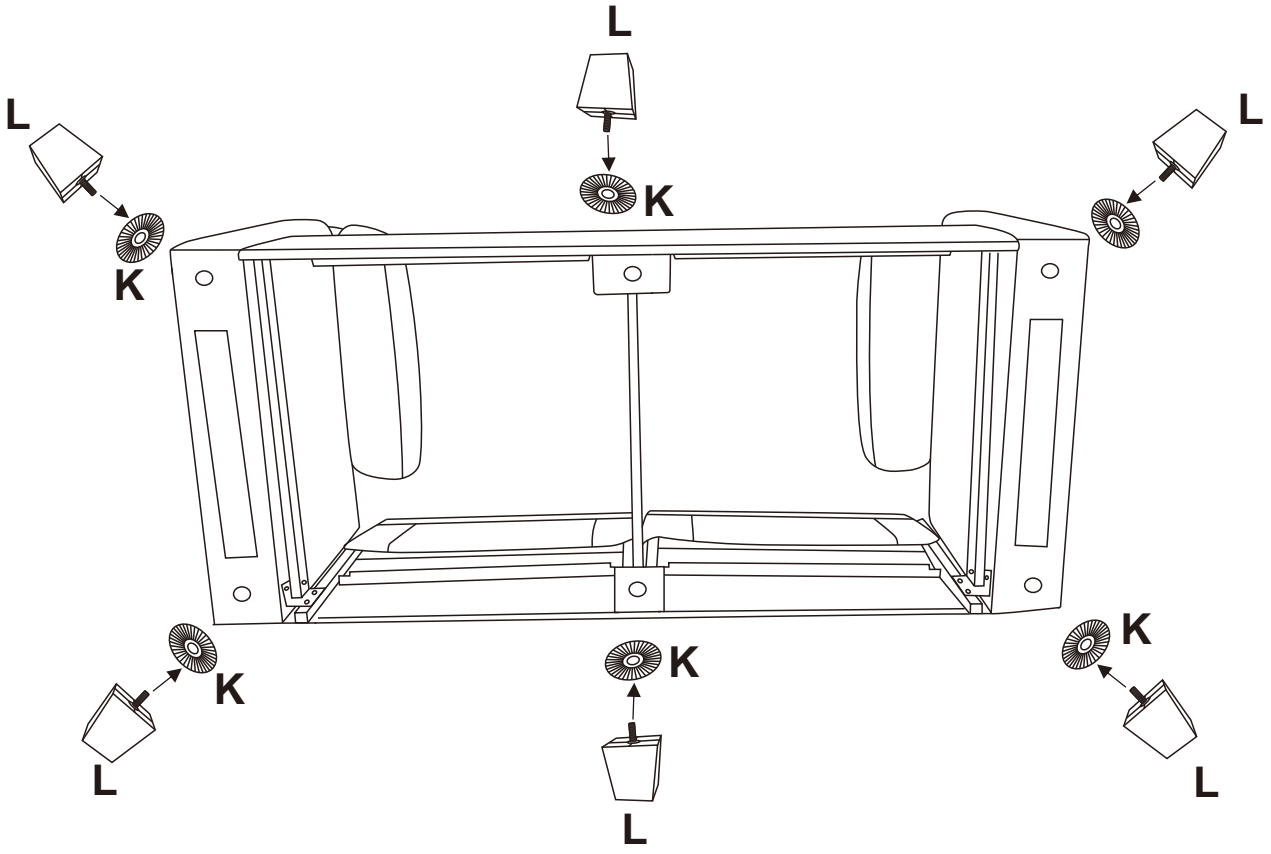

STEP6:

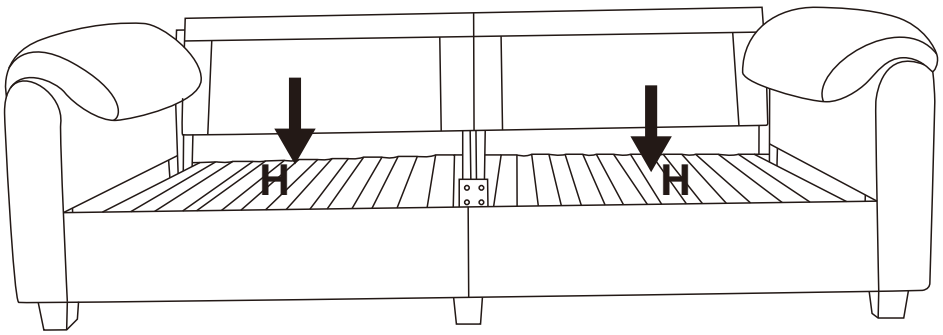

STEP7:

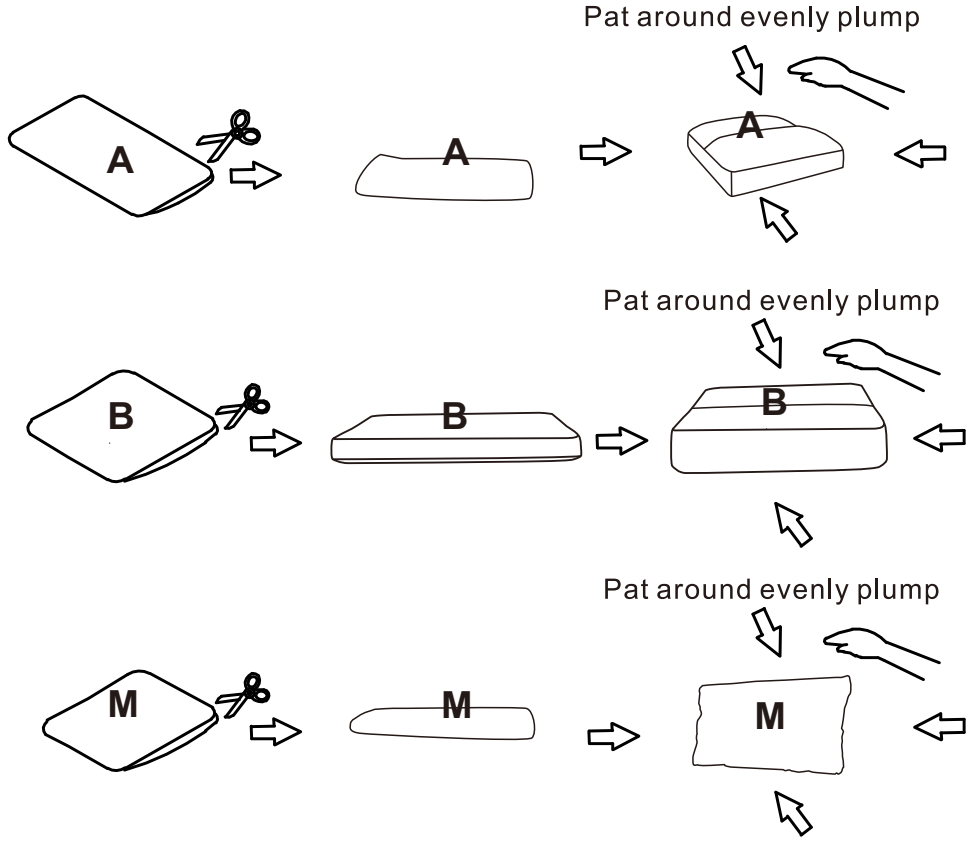
Pat around evenly plump
A
A
A
Pat around evenly plump
B
B
B
Pat around evenly plump
M
M
M

STEP8:

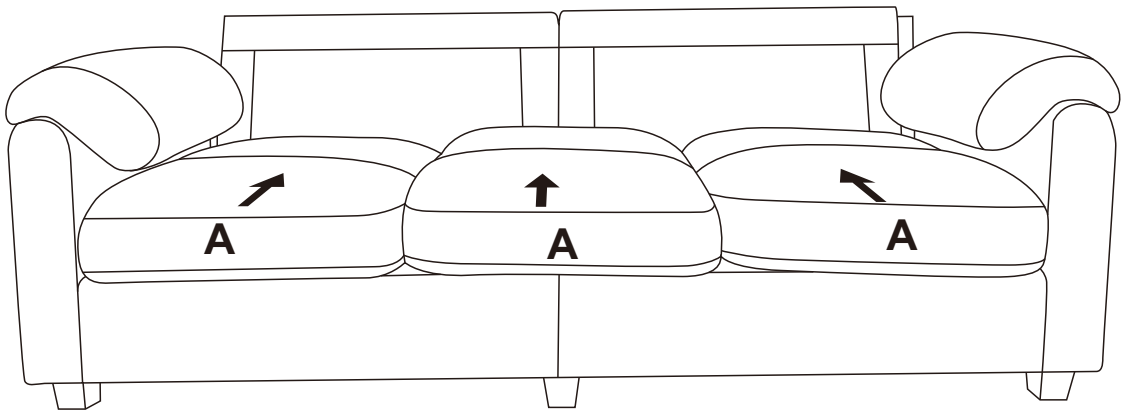
A
A
A

STEP9:

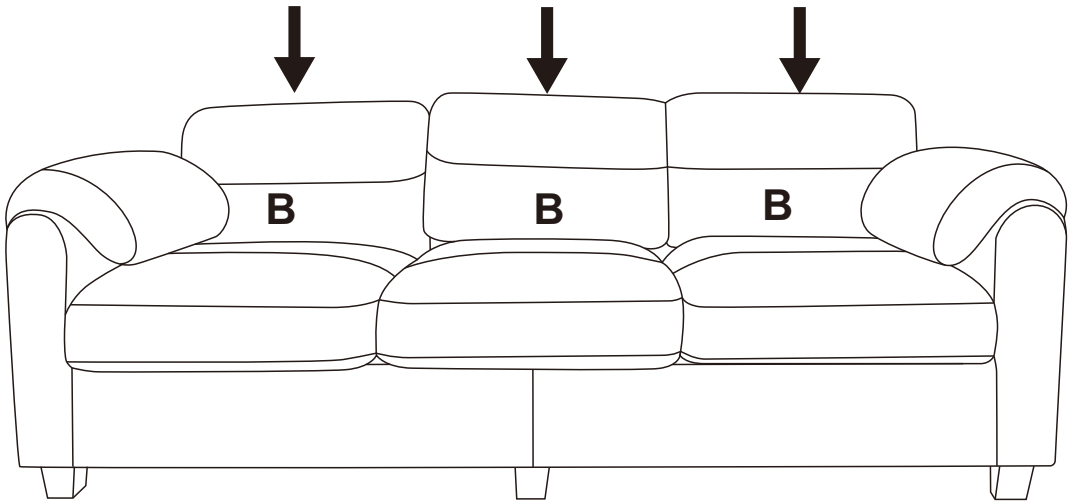

STEP10:

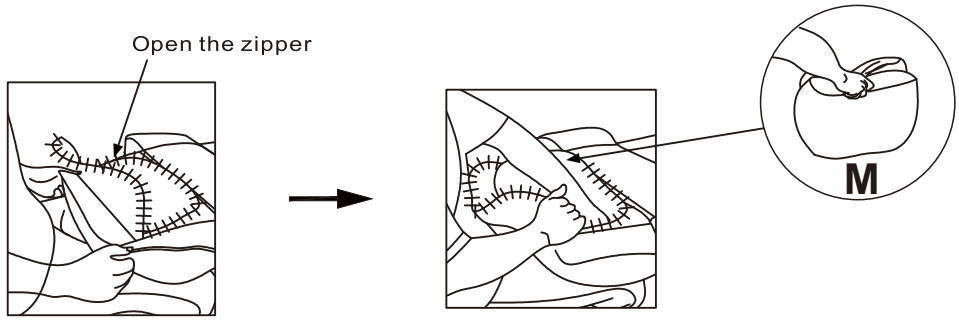

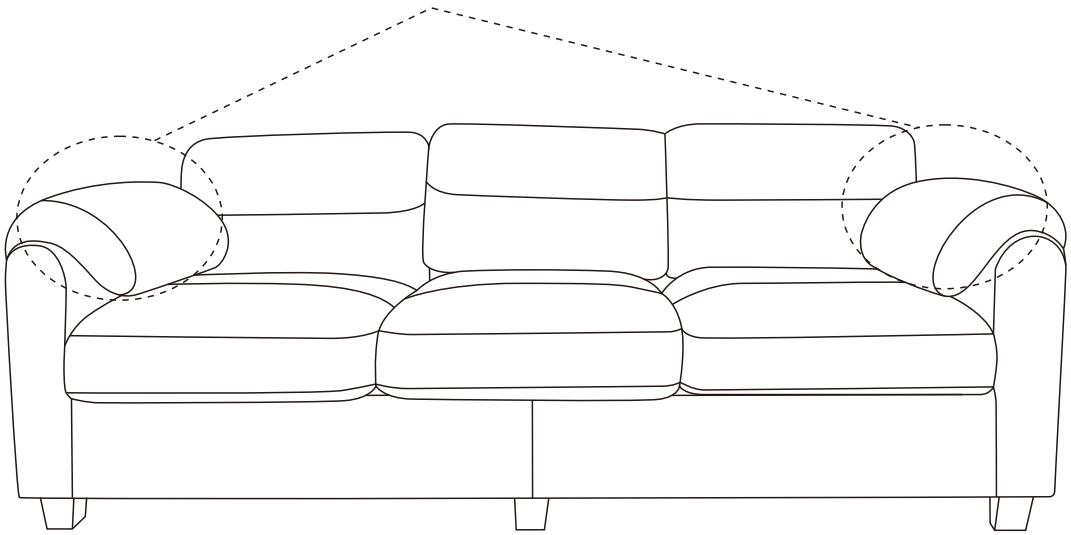

STEP11:

