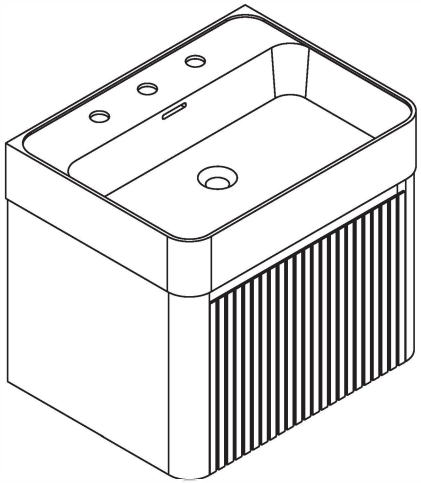

Your order will be shipped in multiple packages, and delivery times may vary.
We appreciate your patience and understanding.

⚠ Warning: Please read instructions fully before starting assembly. Check you have all the components and tools listed on pages.
⚠ Warning: Please place all parts on a flat surface. Place a soft blanket or similar underneath to protect against scratches or stains. Avoid dragging or sliding components across the floor.
⚠ Warning: Regularly check all fittings and fastenings to ensure they are secure and to prevent accidents. If any parts are missing, broken, damaged, or worn, discontinue use of the product until repairs have been made using factory authorized parts.
⚠ Warning: Do not allow children to climb on the furniture as this may result in tipping and serious personal injury. Assemble the furniture away from the reach of children.
⚠ Warning: Do not place furniture close to fire sources or high-temperature objects to avoid the risk of fire.
⚠ Warning: Clean furniture with a damp cloth or alcohol, avoid using cleaning agents containing corrosive chemicals.



Recommended installers：2



Put a carpet on the floor before unpacking

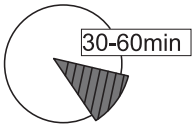

Estimate installation time: 30 minutes

Use the Cam Lock and Eccentric Wheel

ECCENTRIC WHEEL

Tighten the bolt until the shoulder is aligned with the panel.
Be sure not to tighten too much or too little.

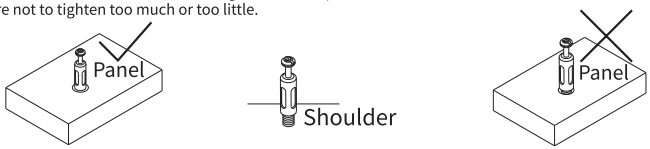

The pre-inserted nut should align with the center of the cam lock when joining two panels. The cam lock should be inserted before the eccentric wheel.



Turn the cam lock clockwise to tighten.

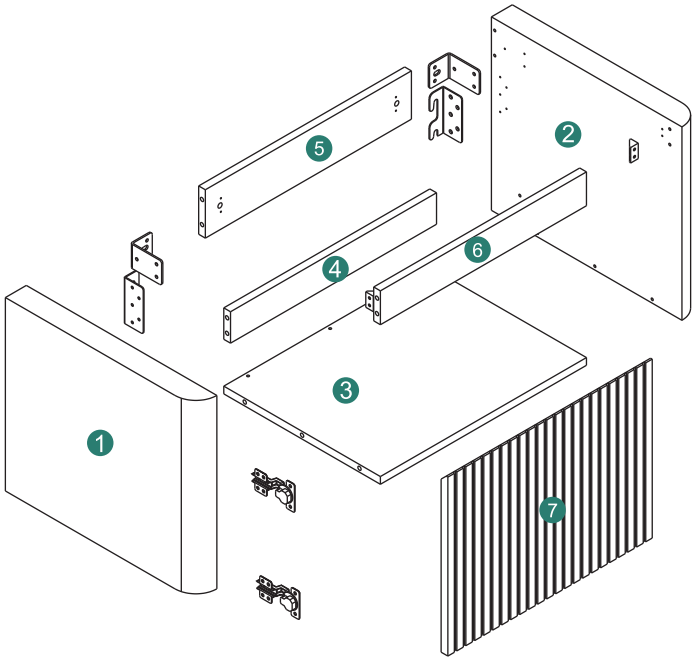

Notice:

1.Follow the installation instructions. Please confirm all accessories are preset before installation.

2. Do not fully tighten the screws during initial assembly. Fully tighten screws only once all pieces which are correctly assembled.

3. If you encounter any problems during installation, please contact our customer service.

4. Please unbox the item from the side with an open-label and put a carpet on the foor to avoid scratching it.

1	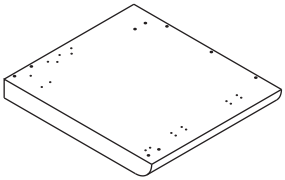	x1	5	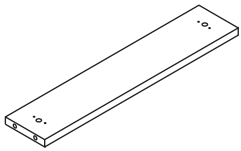	x1
2	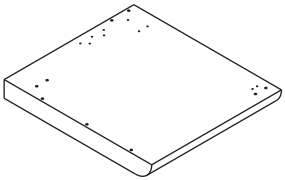	x1	6	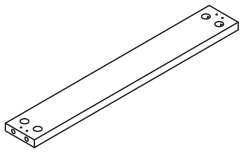	x1
3	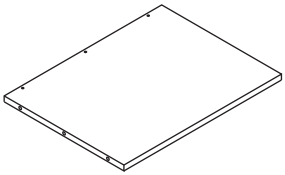	x1	7	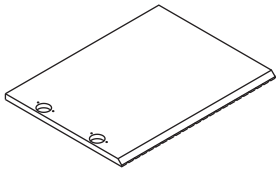	x1
4	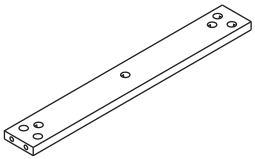	x1			

Components - fittings
Please check you have all the panels listed below.
Note: The quantities below are the correct amount to complete the assembly. In some cases more fittings may be supplied than are required.

A	 Ø6x26mm	x21
B	 Ø15x9mm	x21
C	 Ø3.5x14mm	x40
D	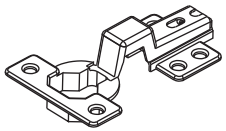	x2
E	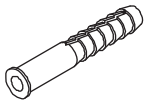	x4
F		x4
G	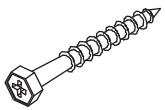	x4
H	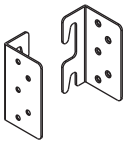	x1

I		x2
J	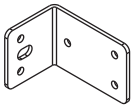	x2
K		x6

1

Ⓐ21pcs Ⓑ21pcs

The floor needs to be covered with paper or carpet protective material before installation!

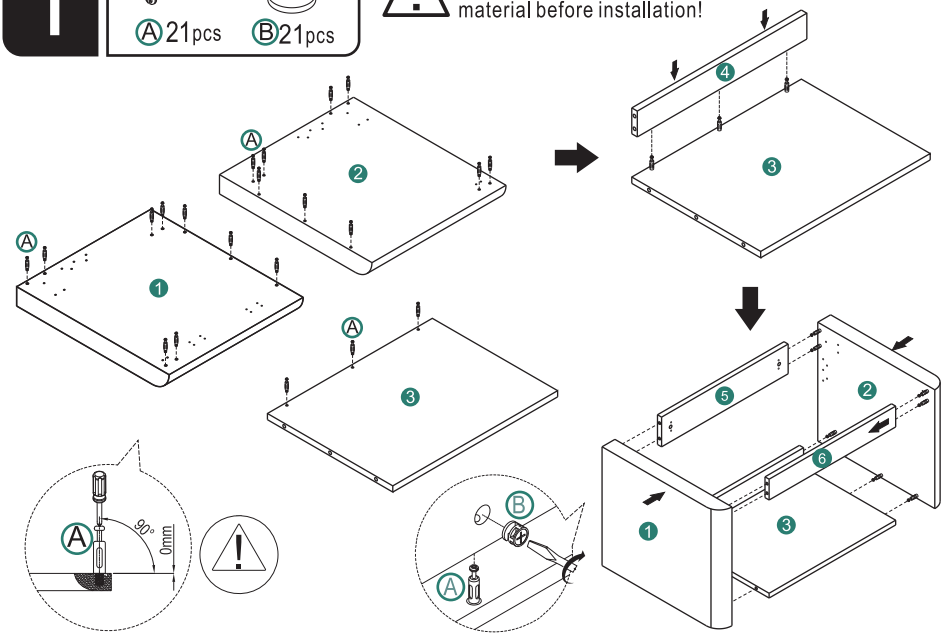

2

Ⓒ32pcs Ⓓ2pcs Ⓗ1pcs Ⓘ 2pcs Ⓙ 2pcs

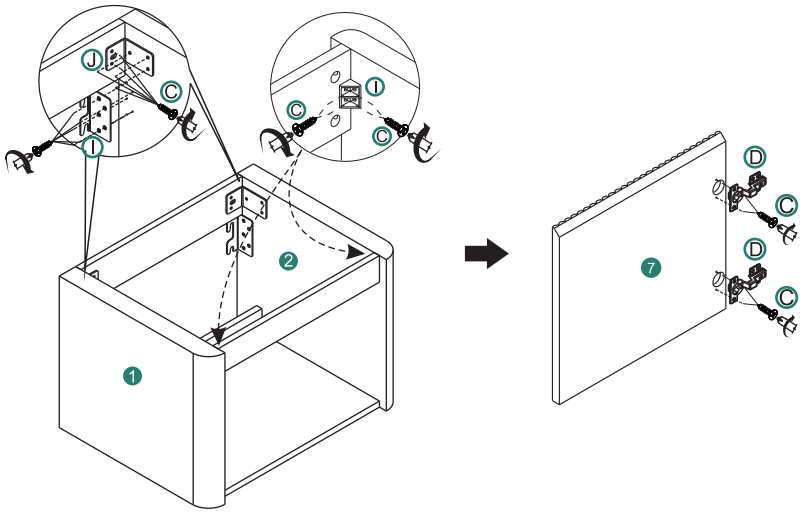

3

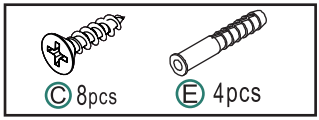

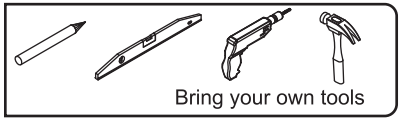

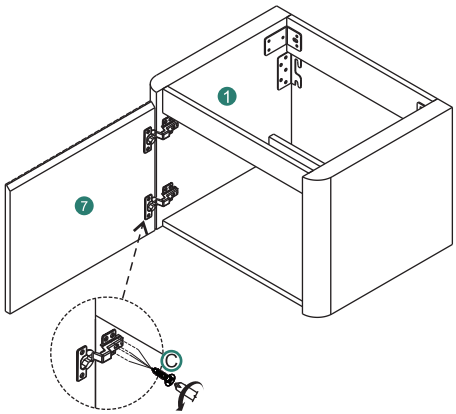

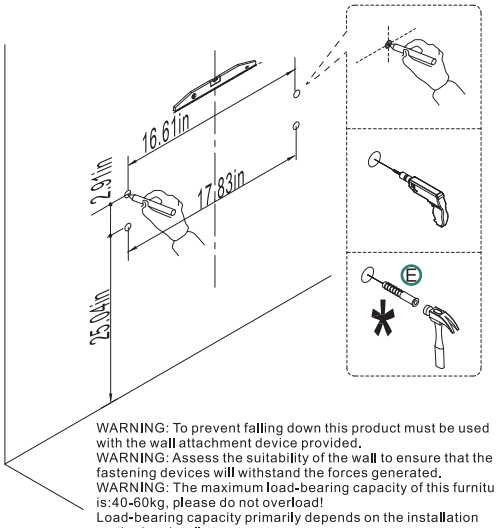

WARNING: To prevent falling down this product must be used with the wall attachment device provided.
WARNING: Assess the suitability of the wall to ensure that the fastening devices will withstand the forces generated.
WARNING: The maximum load-bearing capacity of this furniture is:40-60kg, please do not overload!
Load-bearing capacity primarily depends on the installation method and wall structure.
Always identify the wall type first and hire professional installers using fasteners specifically designed for that wall type.

4

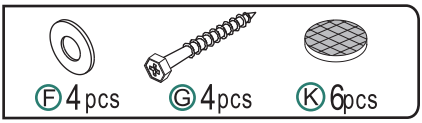

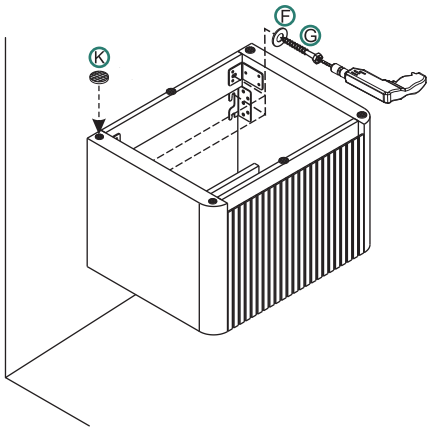

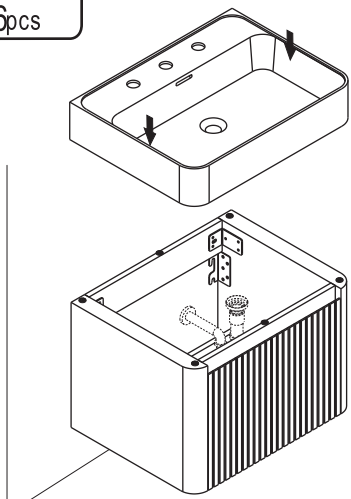

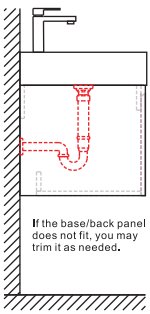

If the base/back panel does not fit, you may trim it as needed.

Installation of drain assembly

Pop-up Waste Installation

STEP 1
Install Pop-up Waste with over flow.

STEP 2
Connect the drain pipe.

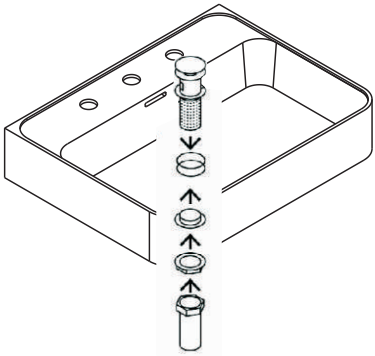

This product does not include faucet and drainage accessories. The content on this page is provided as installation suggestions only. Please carry out the installation according to the requirements of the product you actually purchased.

Always fully close the faucet after use!
Failure may cause:

Water Overflow
Continuous flow with blocked drain floods cabinetry, floors, and ceilings below, causing property damage and liability for compensation.

Personal Injury
Water accumulation significantly increases slip/fall risks (especially for children/elderly).

Cabinetry Damage
Water infiltration leads to swelling, warping, hardware corrosion, and countertop cracks.

Hidden Hazards
Persistent leakage erodes wall structures, breeds mold, and incurs high repair costs.

We strongly recommend that you:
- ☑ Confirm faucet is fully closed after each use;
- ☑ Regularly inspect faucet/hoses for leaks;
- ☑ Shut off angle valve immediately and seek repair if malfunction occurs;
- ☑ Cut off main water supply when leaving home long-term.

Disclaimer: Users bear full responsibility for damages caused by faucet left open or delayed repairs.

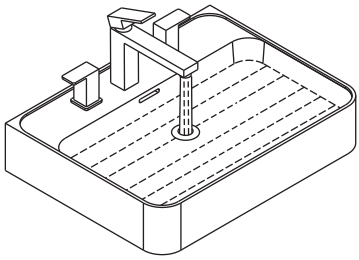

Side adjustment

Side adjustment of the door is made by using the indicated screw.

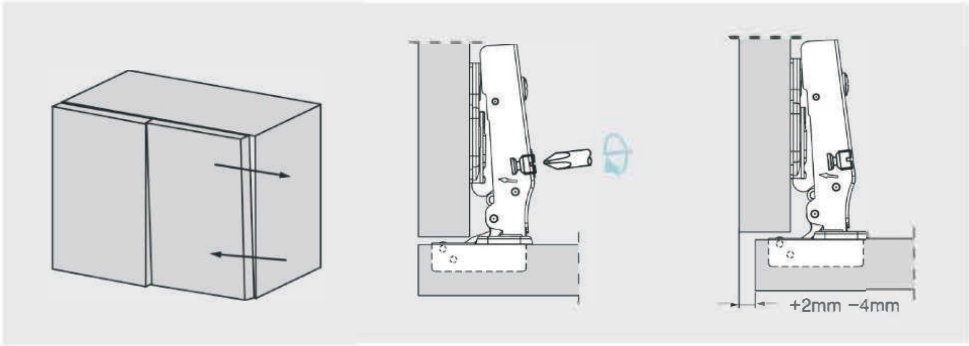

Depth Adjustment

Depth adjustment is made without loosening any screw. The door can be moved in or outby rotating the cam adjuster on the hinge arm.

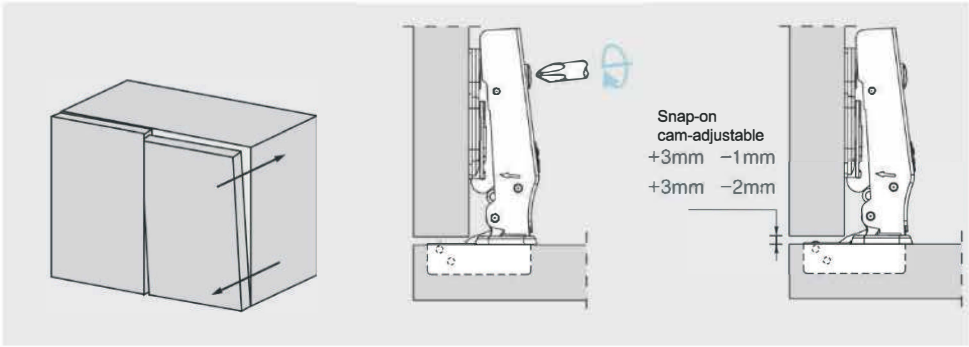

Height Adjustment

By loosening the two fixing screws to allow the mounting plate to slide up or down ,the door can be adjusted vertically by ±2mm.After retightening the screws, the Depth adjustment is done.

