Product Installation Manual

WARNING - If any Special Control Device is used with this Fixture, follow the instructions carefully to ensure full compliance with NEC requirements. If there are any questions, contact a Qualified Electrical Contractor.

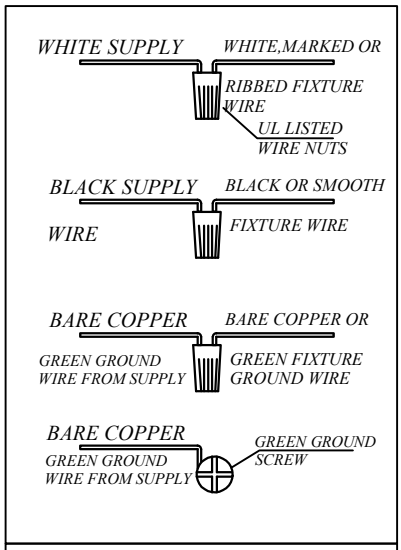

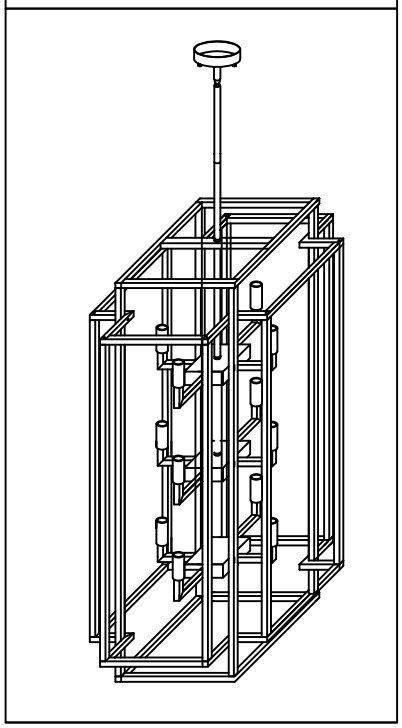

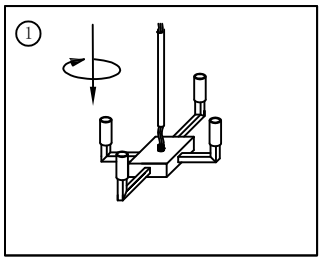

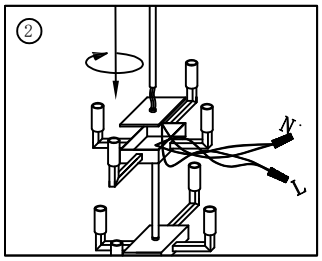

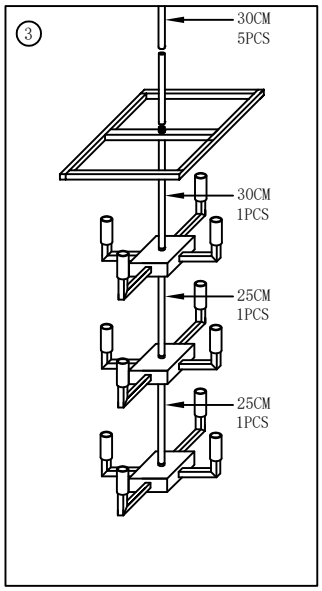

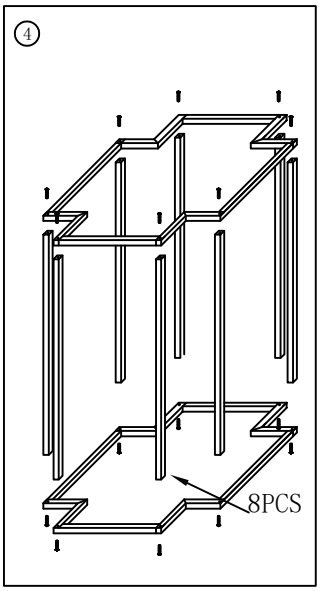

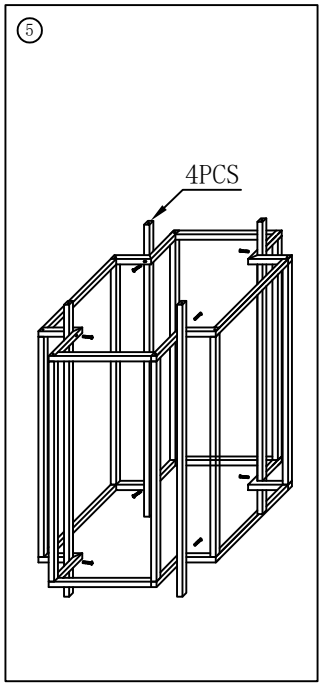

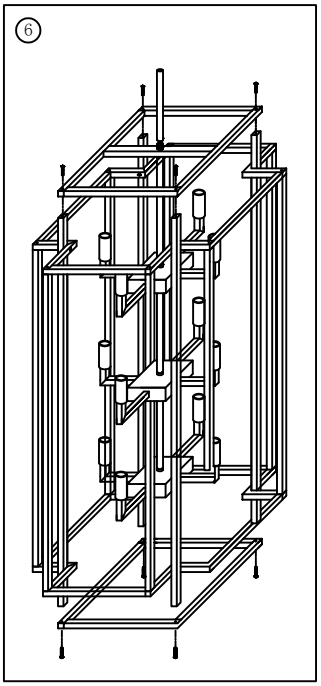

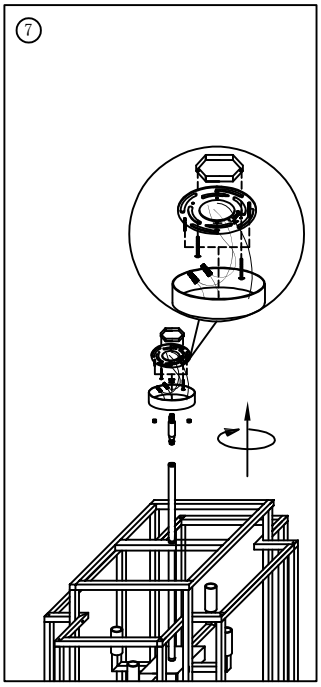

1. AC110－130V, 50－60Hz. The maximum lamp power is 40W.Use type E12 bulbs.
2. Avoid scratching the surface of the lighting fixture and wires during installation
3. Connect the live wire to"L",the neutral wire to "N",and wrap the bare copper ground wire around the green grounding screw.
4. Do not install the fixture onto the ceiling until it is completely dry.Ensure the surrounding area is also ventilated and dry.
5. Keep away from acids, acidic substances,and gases.Clean with a soft cloth;do not wash with water.
6. The lighting fixture must be installed by a professional electrician and used indoors only.
7. Be sure to turn off the power supply when installing,cleaning,or replacing the bulb