ASSEMBLY INSTRUCTION

ITEM NO.N715P245743

Console Table

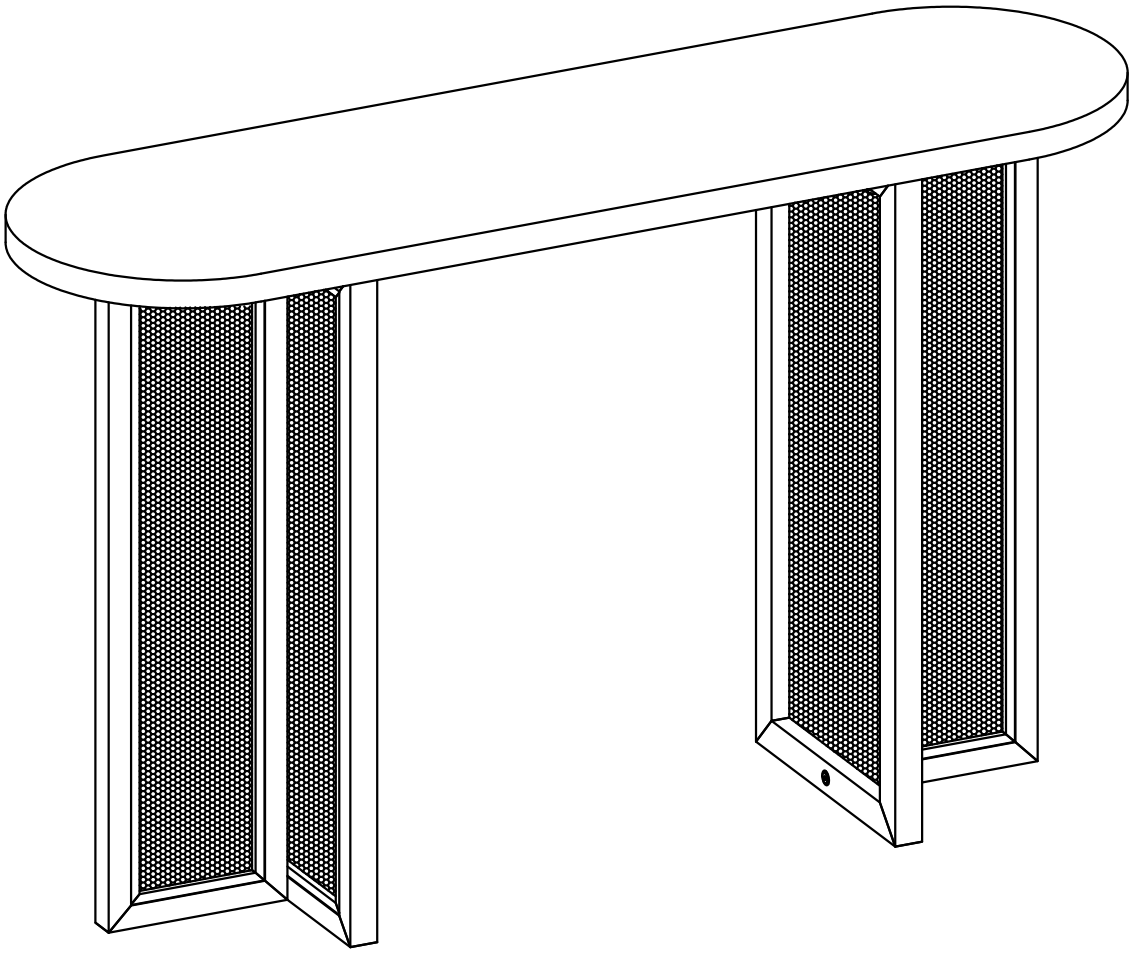

ASSEMBLY INSTRUCTION

ITEM NO.N715P245743

Please read these instructions fully before starting assembly：

1. Place all wooden parts on a clean and smooth surface such as a rug or carpet to avoid scratching the parts.

2. Kindly follow the assembly instructions step by step.

3. Do not tighten all screws and bolts until the table is fully assembled.

4. Unscrew the protective plastique supports from the metal insert of the table legs before assembly.

5. Parts of the assembly will be easier with 2 people.

Care and maintenance：

Only clean using a damp cloth and mild detergent, do no use bleach or abrasive cleaners.

ASSEMBLY INSTRUCTION

ITEM NO.N715P245743

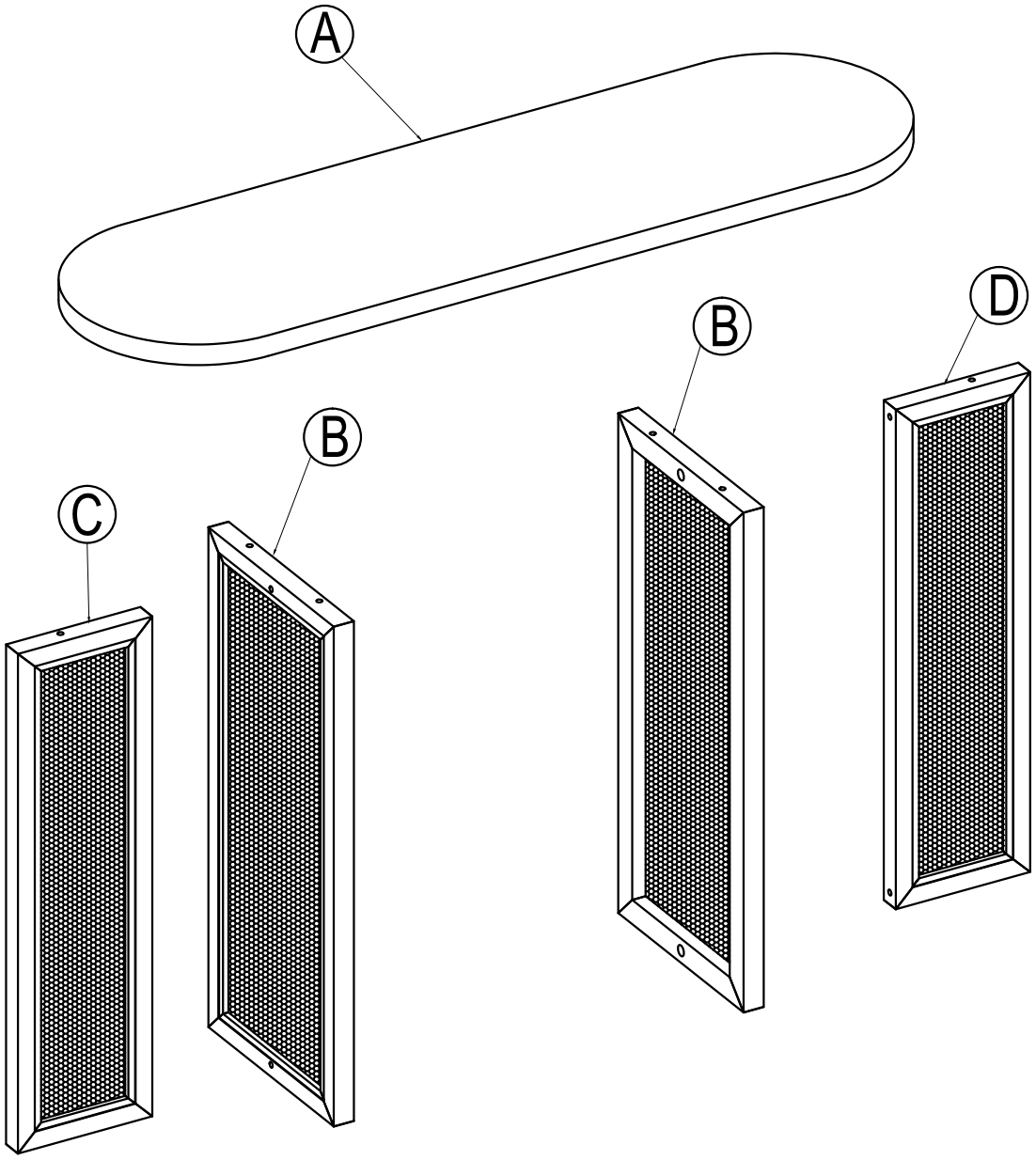

ASSEMBLY INSTRUCTION

ITEM NO.N715P245743

Part List

A 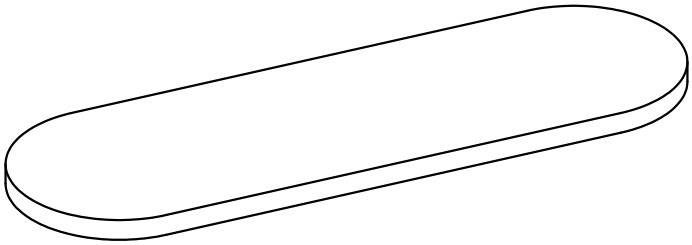	B 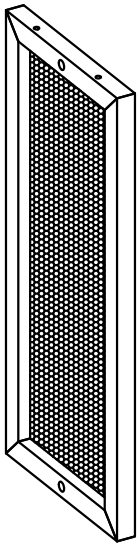
TABLE TOP (1 pc)	BIG LEG (2 pcs)
C 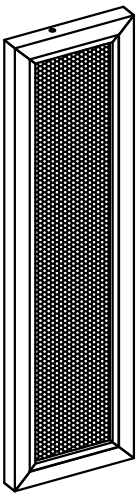	D 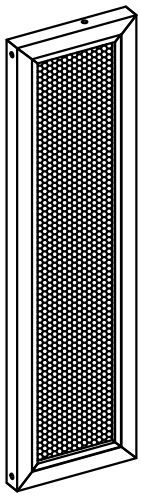
SMALL LEG LEFT (1 pc)	SMALL LEG RIGHT (1 pc)

ASSEMBLY INSTRUCTION

ITEM NO.N715P245743

Hardware List

① 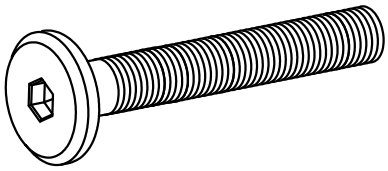 Ø 1/4" x 45 mm	② 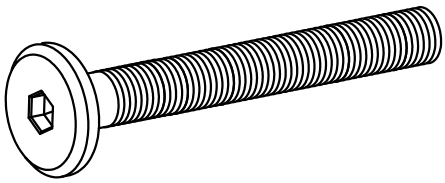 Ø 1/4" x 50 mm
BOLT (4 pcs)	BOLT (6 pcs)
③ 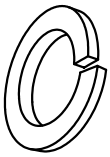 Ø5/16" x 13 mm	④ 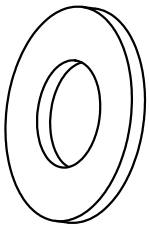 Ø5/16" x 16 x 2 mm
LOCK WASHER (10 pcs)	FLAT WASHER (6 pcs)
⑤ 4 mm	⑥ 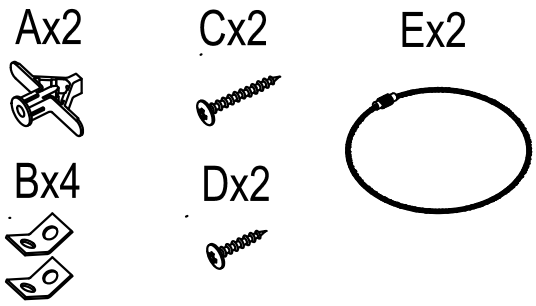
ALLEN KEY (1 pc)	ANTI-PACKING KIT(2 SETS)

ASSEMBLY INSTRUCTION

ITEM NO.N715P245743

STEP 1:

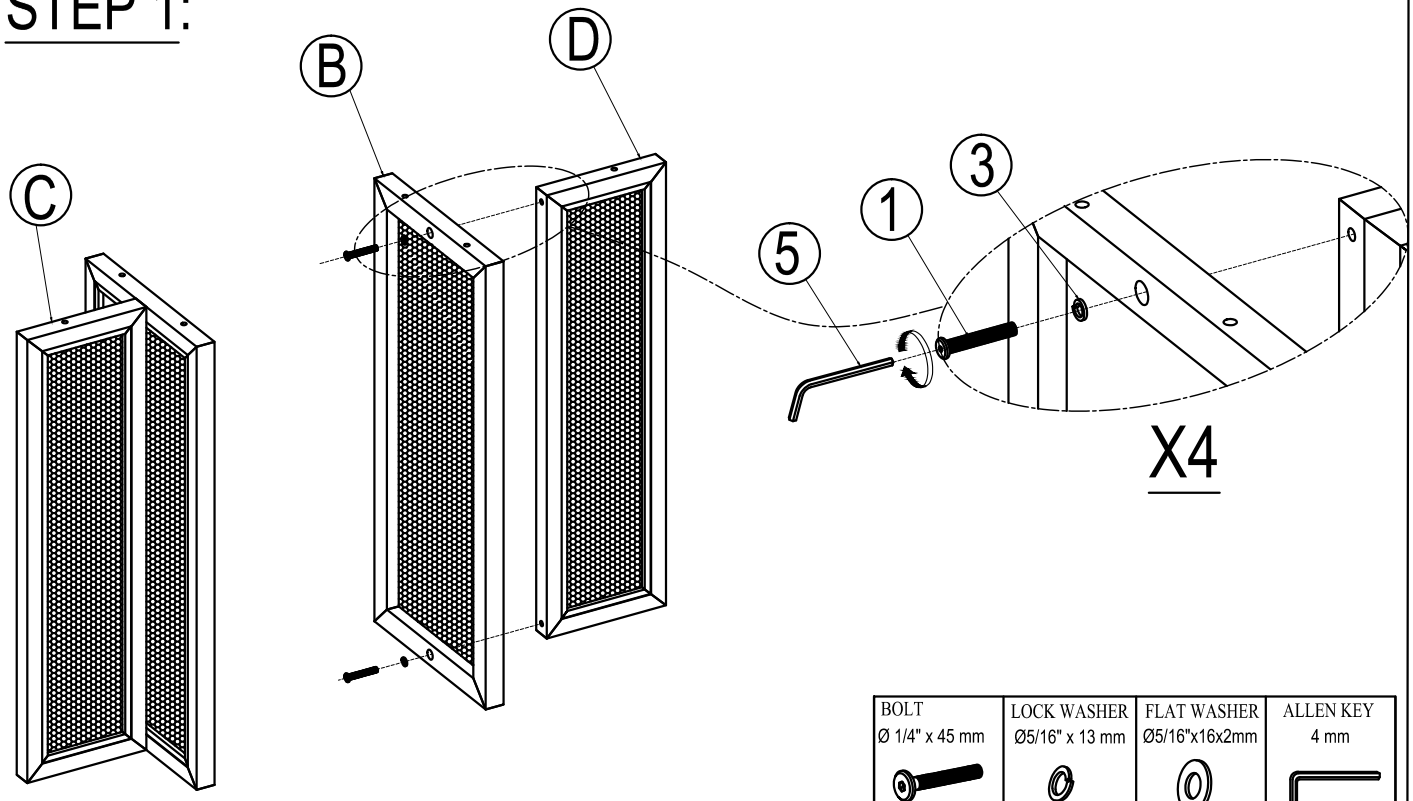

BOLT	LOCK WASHER	FLAT WASHER	ALLEN KEY
Ø 1/4" x 45 mm	Ø5/16" x 13 mm	Ø5/16"x16x2mm	4 mm
①x 4	③x 4	④x 4	⑤x 1

STEP 2:

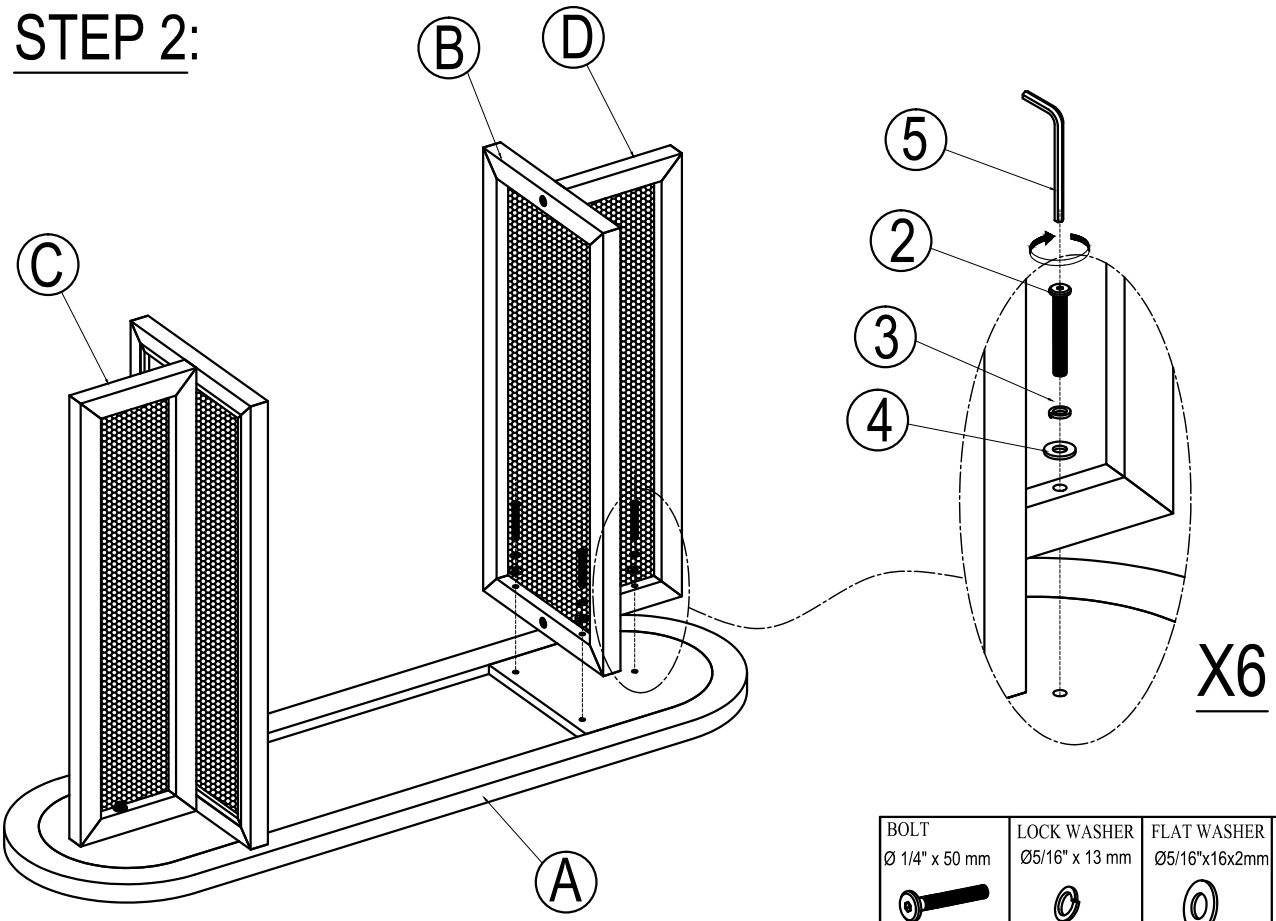

BOLT	LOCK WASHER	FLAT WASHER	ALLEN KEY
Ø 1/4" x 50 mm	Ø5/16" x 13 mm	Ø5/16"x16x2mm	4 mm
②x 6	③x 6	④x 6	⑤x 1

ASSEMBLY INSTRUCTION

ITEM NO.N715P245743

STEP 3:

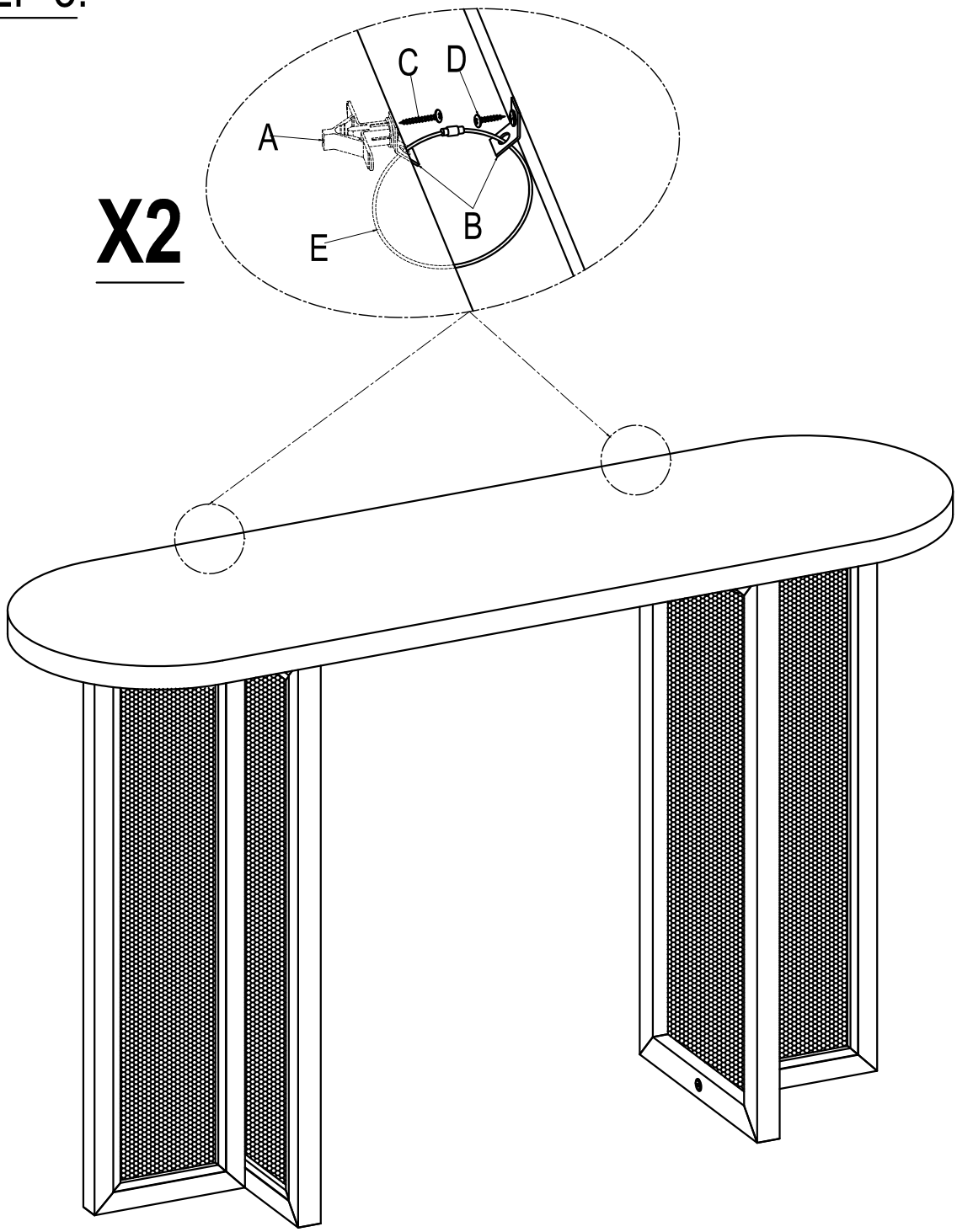

⑥-A	⑥-B	⑥-C	⑥-D	⑥-E
2 pcs	4 pcs	2 pcs	2 pcs	2 pcs

COMPLETE