12 x 16FT

HWG20-037JS-2

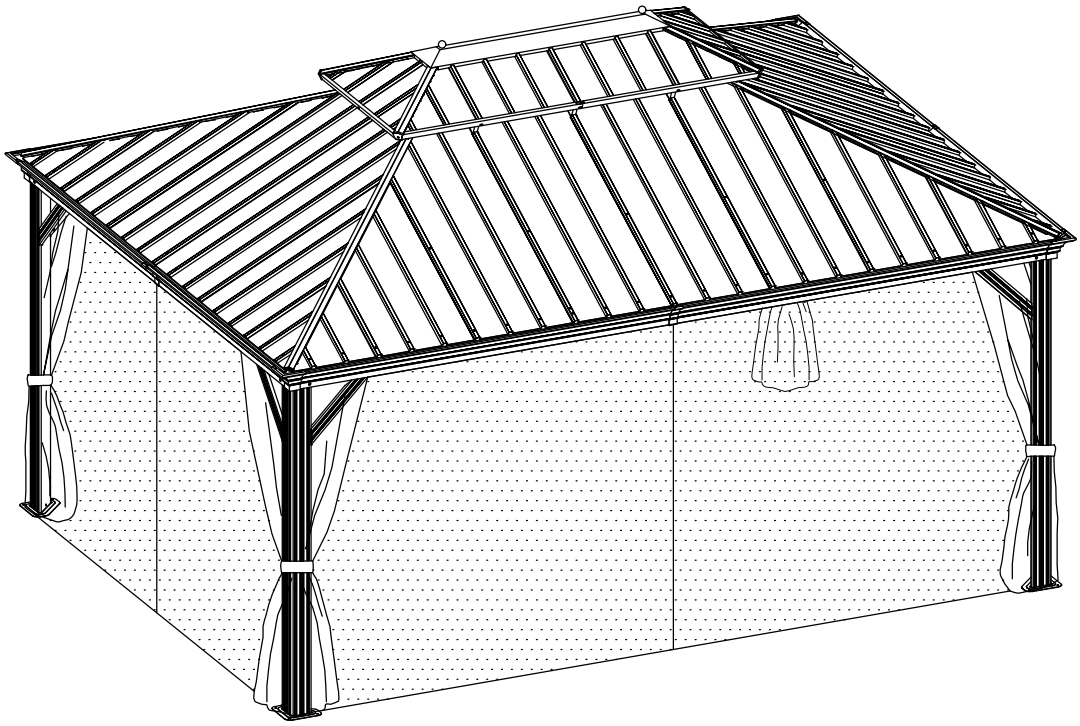

A 4x

B1 2x

B2 2x

B5 2x

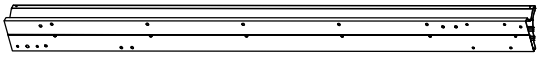

B6 2x

E 4x

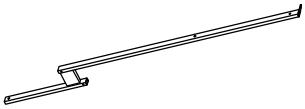

E1 8x

C1 2x

C2 2x

C5 2x

C6 2x

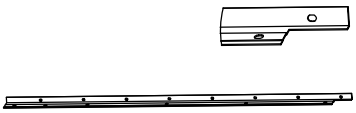

D1 2x

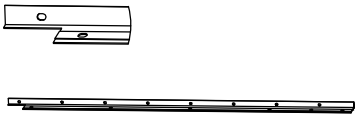

D2 2x

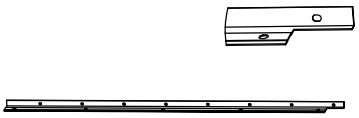

D3 2x

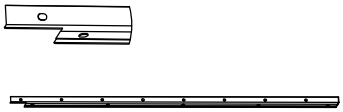

D4 2x

D5 2x

D6 2x

F1 8x

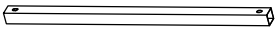

F2 4x

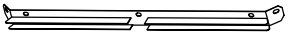

I1 2x

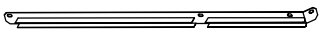

I3 2x

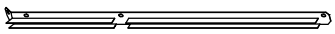

I4 2x

G1 2x

G3 2x

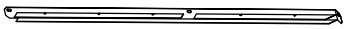

G4 2x

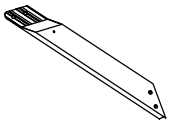

H 4x

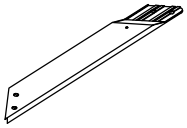

H1 4x

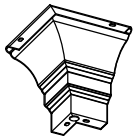

K 4x

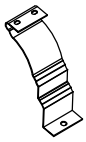

K1 4x

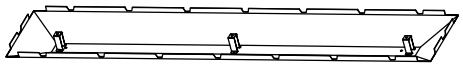

M3b 1x

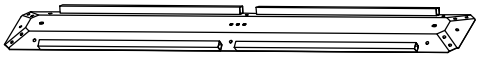

L3 1x

W 4x

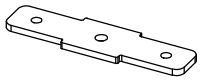

W1 8x

J 4x

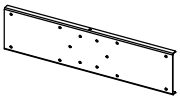

P 4x

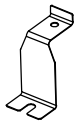

V 4x

E5 4x

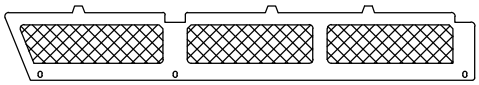

V3a 2x

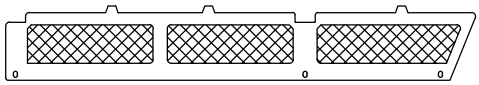

V3b 2x

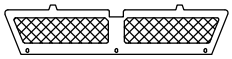

V1 2x

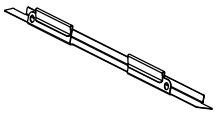

Z 64x

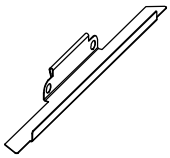

Z1 8x

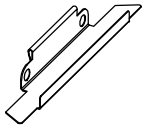

Z2 8x

U 128x

N 8x

N1 2x

Y 96x

W3 8x	W4 8x	Za 2x	T 4x	T1 4x
R1 4x	R2 4x	R3 4x	R4 4x	
R5 4x	R6 4x	R7 4x		
S1 4x	S2 4x	S3 4x		
M6x15 1 289x	M6x23 2 72x	M6x25 3 8x	ST 4.8x12 4 24x	
5 2x	M6x42 6 8x	M6x47 7 8x	8 16x	
M6x10 9 8x	10 12x	11 1x	4mm 12 2x	
6mm 13 1x	14 1x	M5x15 15 40x		

<1>

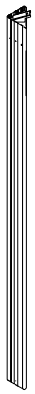

A 4x

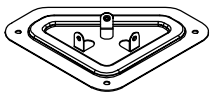

J 4x

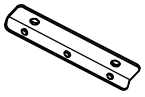

W3 8x

W4 8x

M6x15

1 12x

M5x15

15 40x

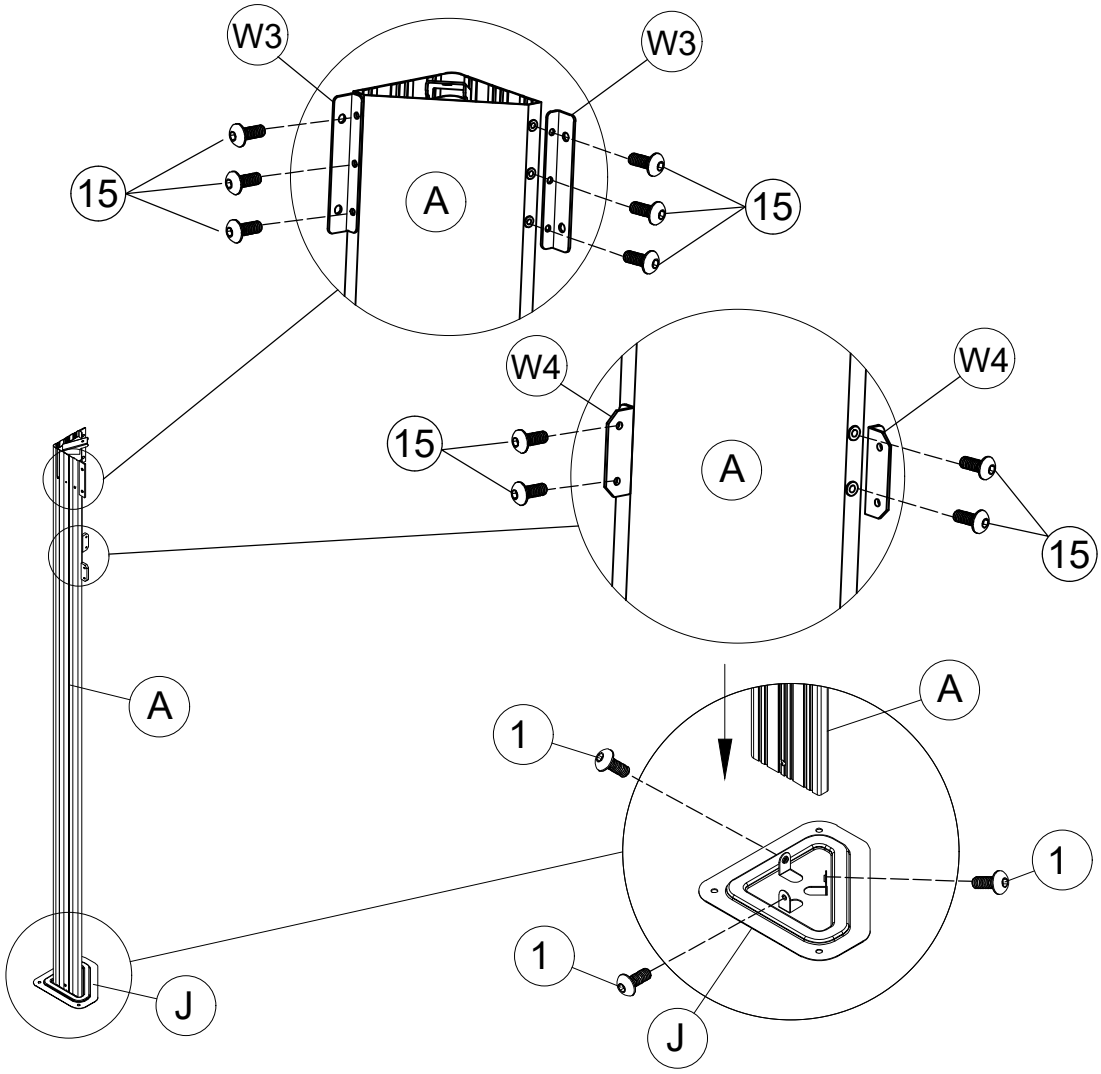

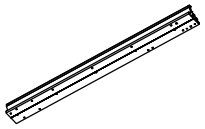

B1 2x

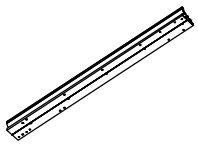

B2 2x

C1 2x

C2 2x

D1 2x

D2 2x

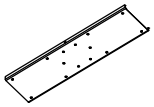

P 2x

M6x15

1 52x

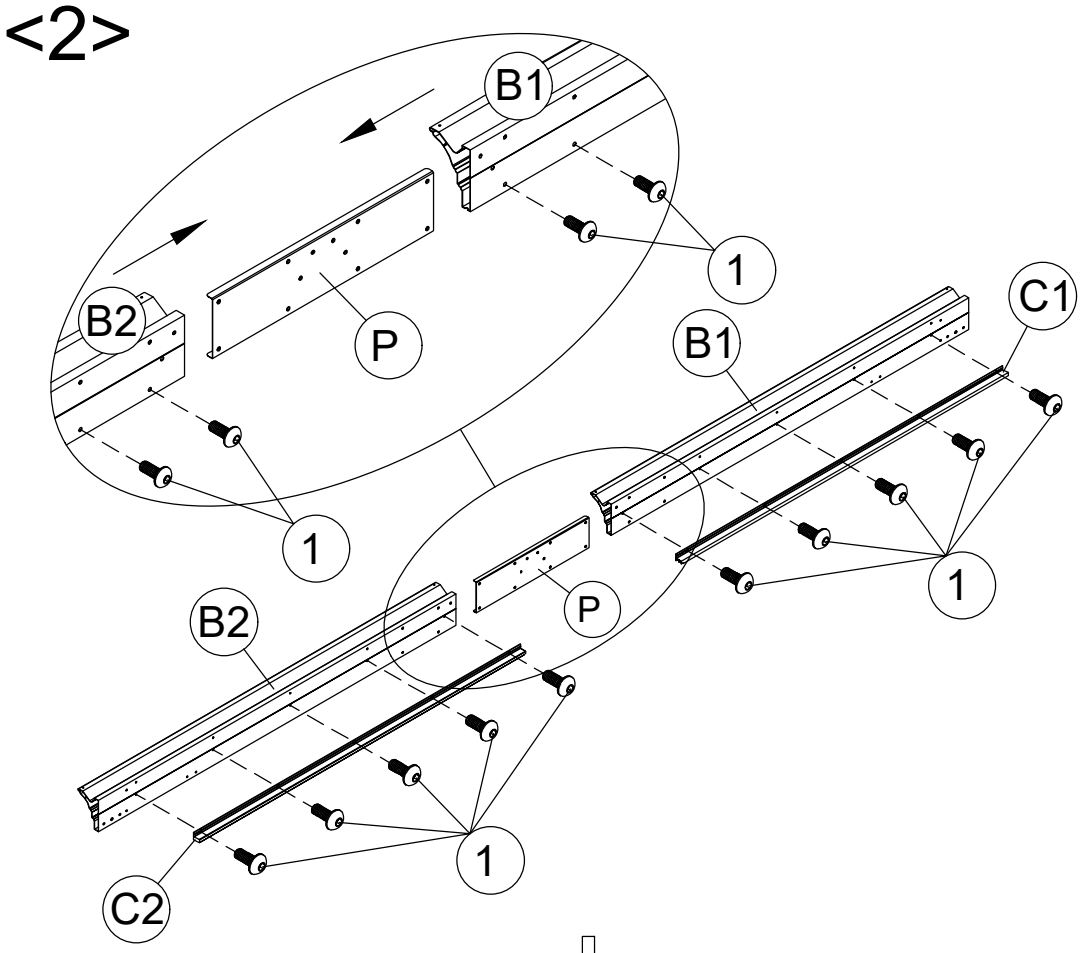

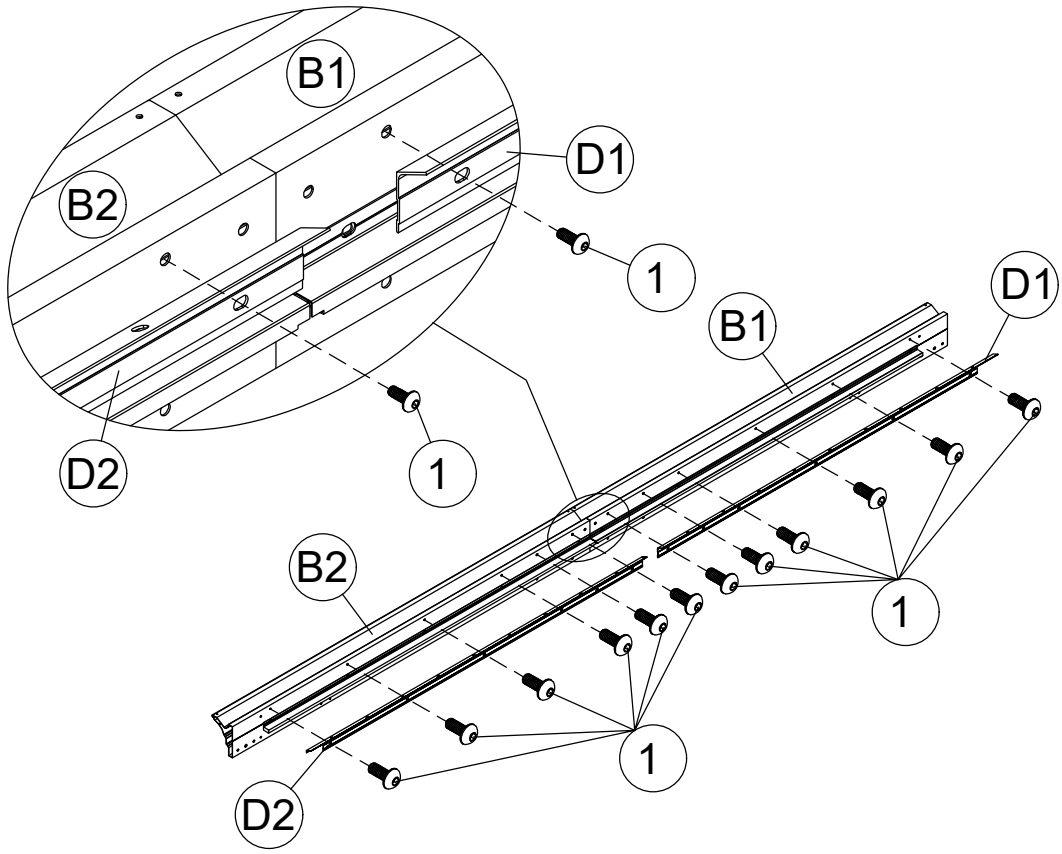

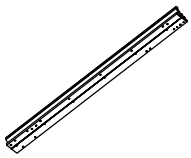

B5 2x

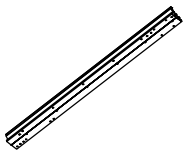

B6 2x

C5 2x

C6 2x

D3 2x

D4 2x

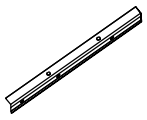

D5 2x

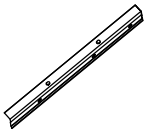

D6 2x

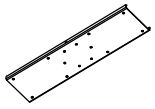

P 2x

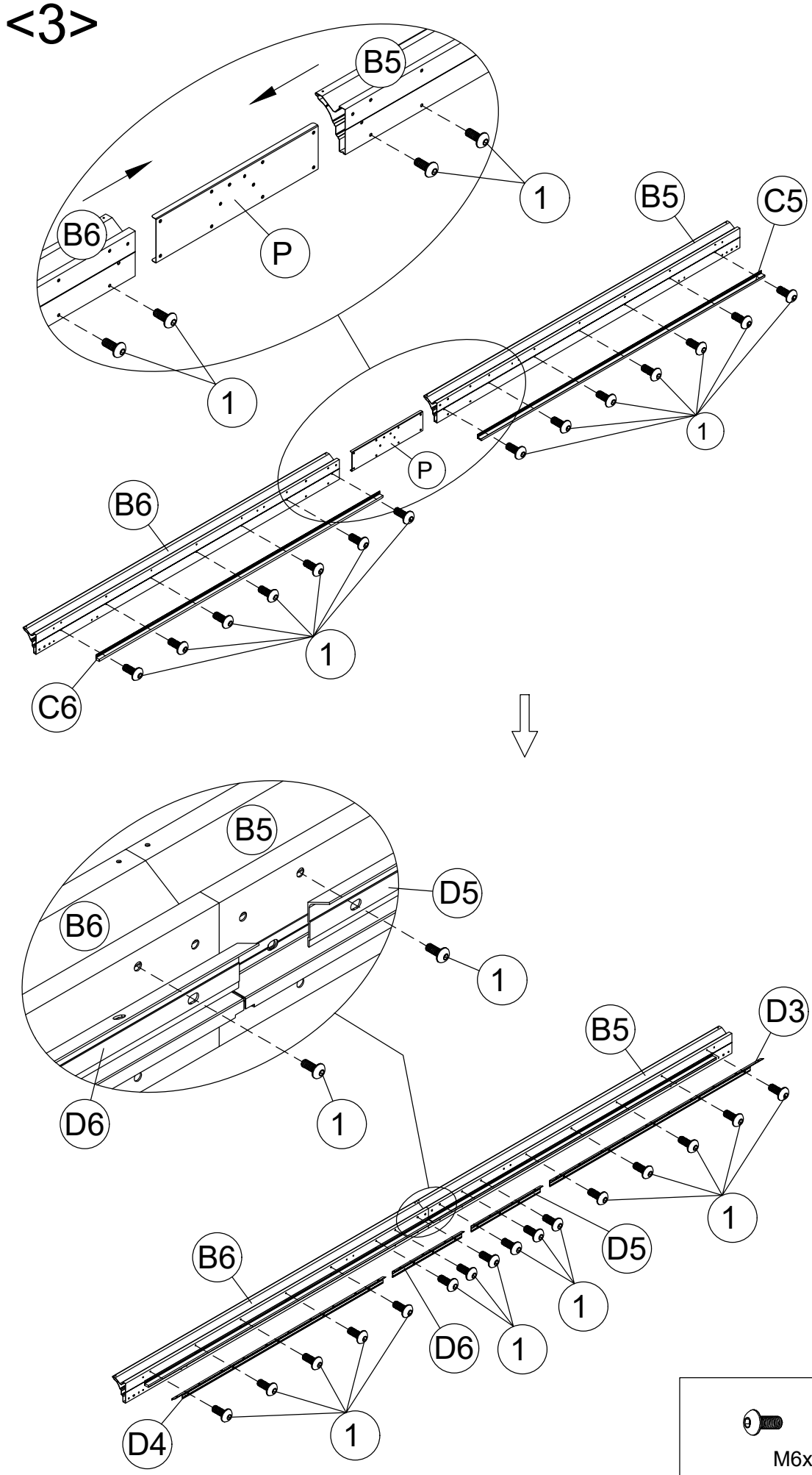

M6x15

1 68x

M6x15

1 16x

8 16x

<4>

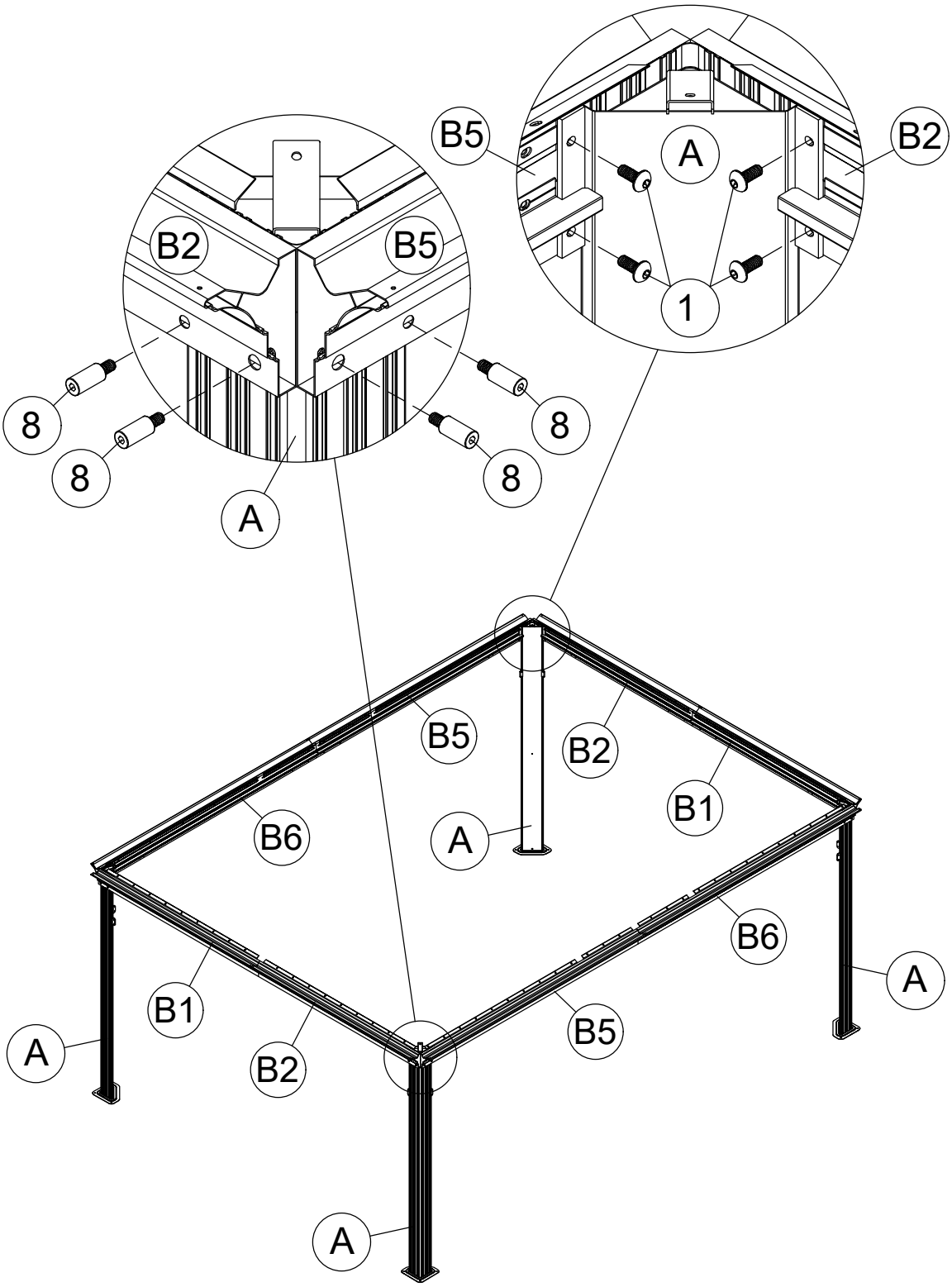

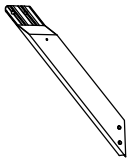

H 4x

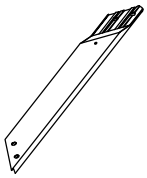

H1 4x

M6x15

1 32x

10 12x

<5>

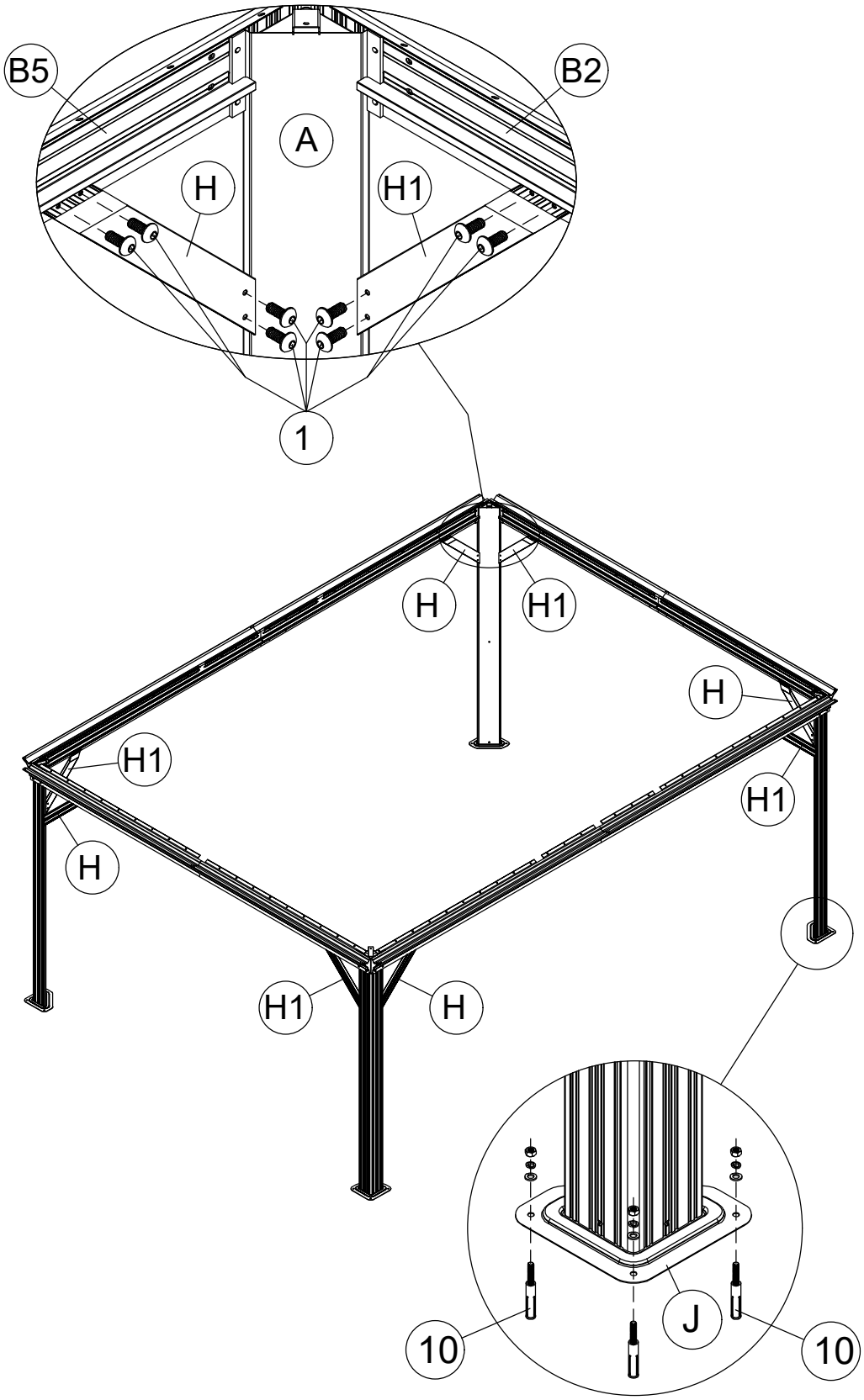

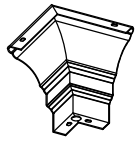

K 4x

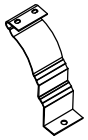

K1 4x

U 128x

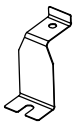

V 4x

M6x15

1 4x

ST 4.8x12

4 24x

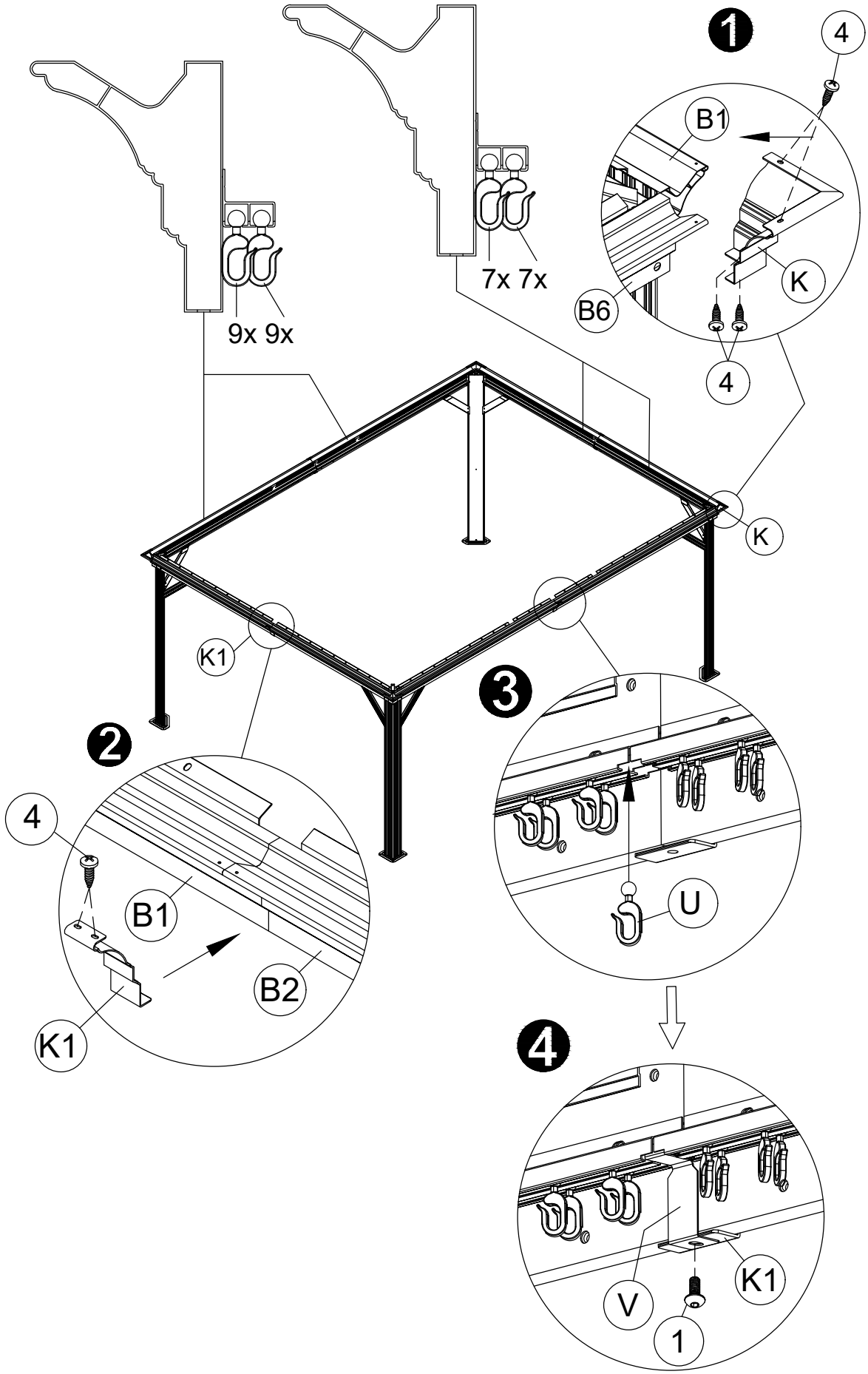

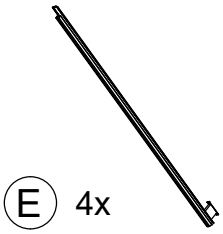

E 4x

E5 4x

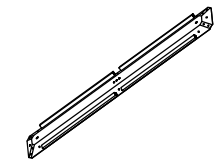

L3 1x

M6x15

1 16x

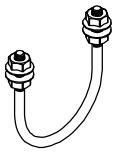

11 1x

11

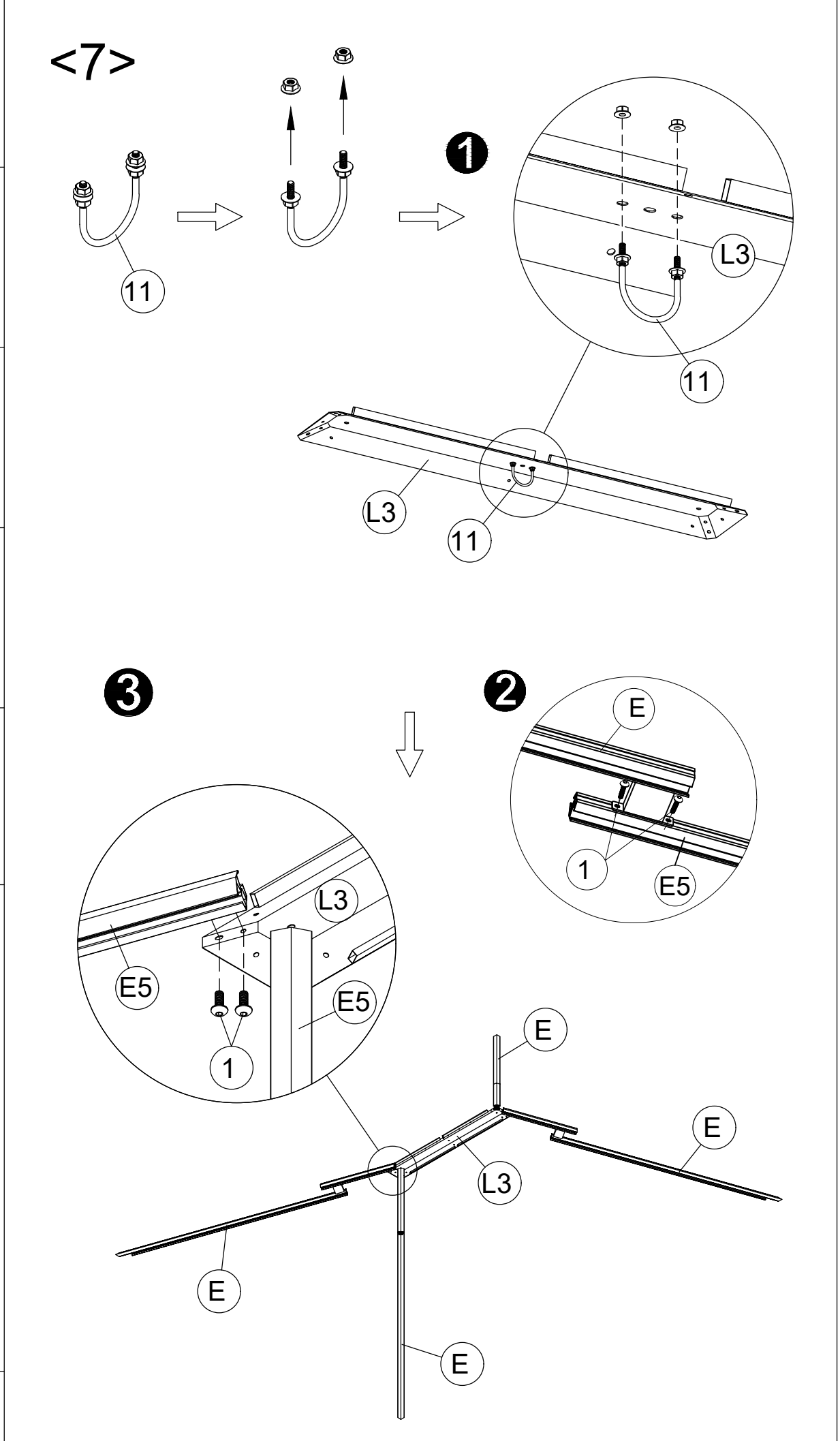

M6x15

1 4x

<8>

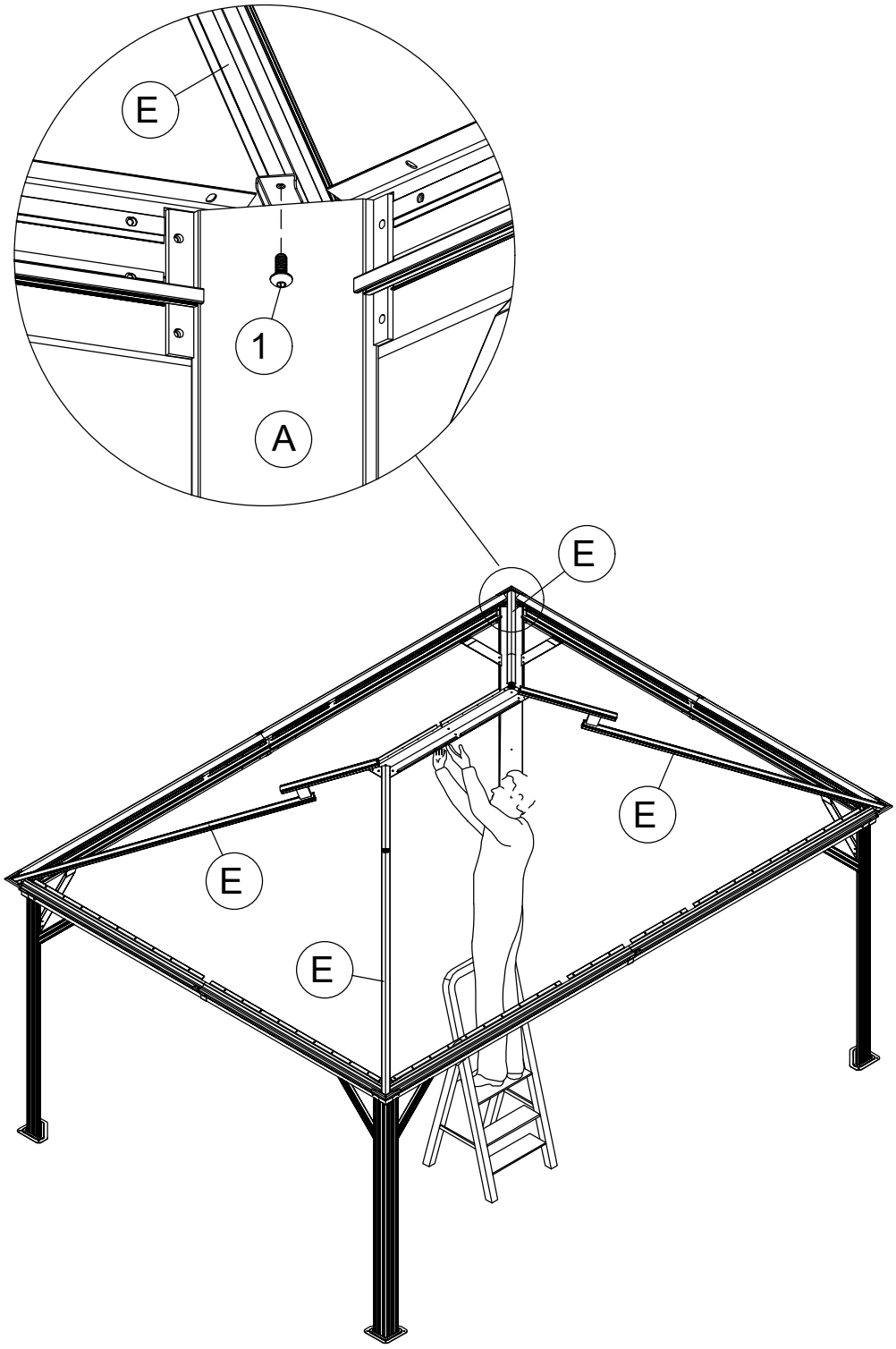

Note:
1. Let one person stand on the ladder to lift "L3" and hold and let others fasten the screws connecting both ends of "E".
2. Please do not let go of holding "L3" until all the "E" screws are installed.

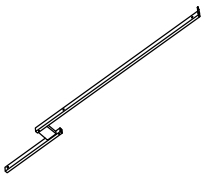

E1 8x

M6x15

1 24x

<9>

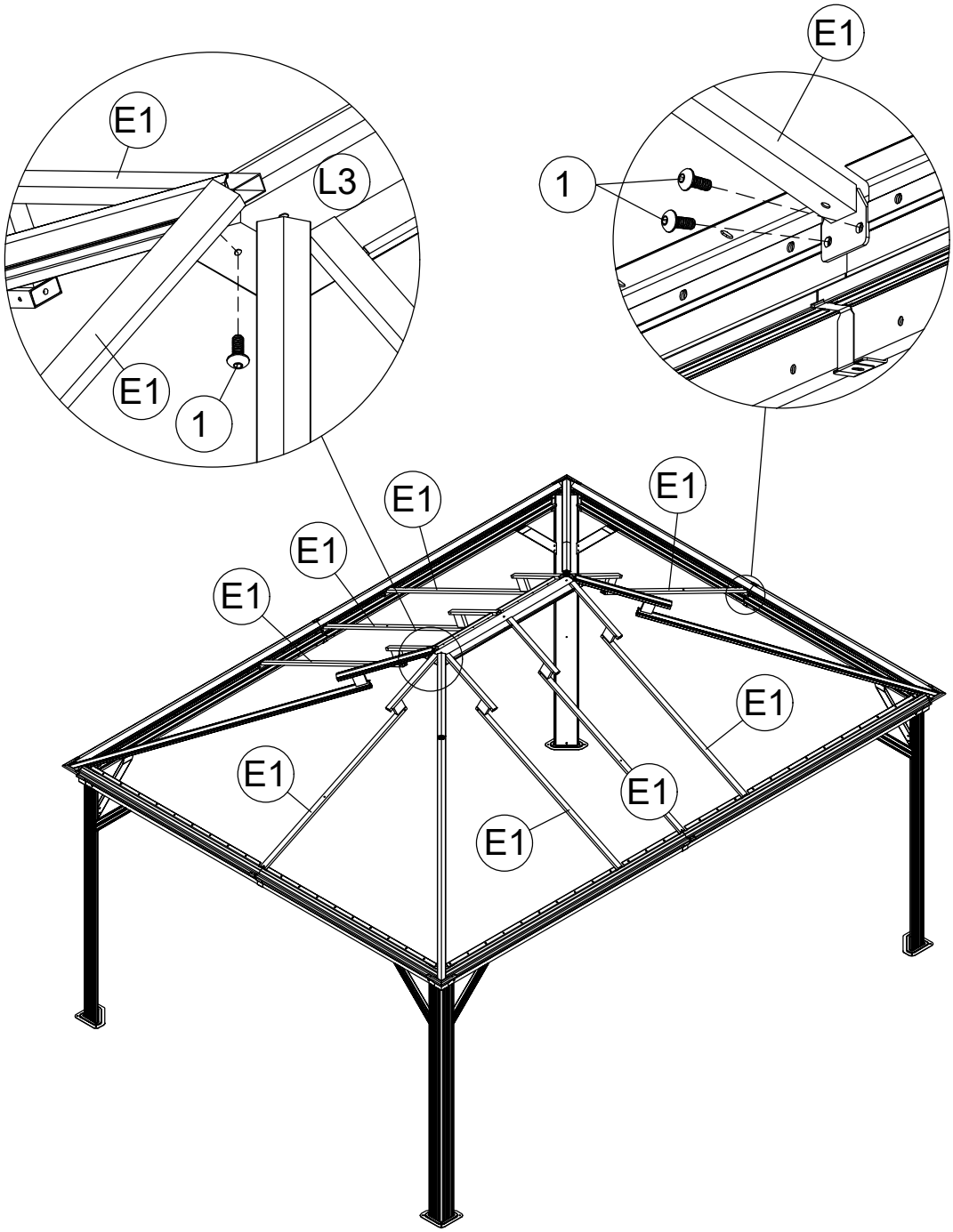

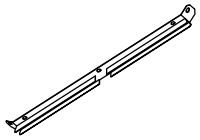

I1 2x

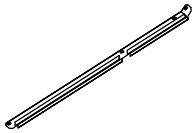

I3 2x

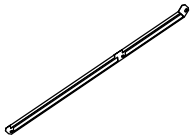

I4 2x

N 4x

M6x15

1 12x

<10>

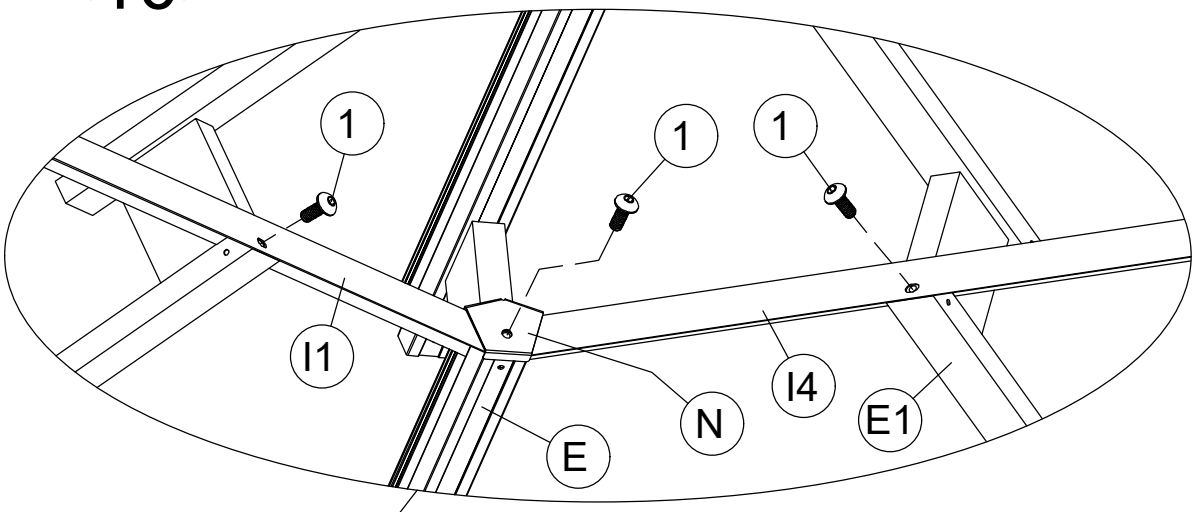

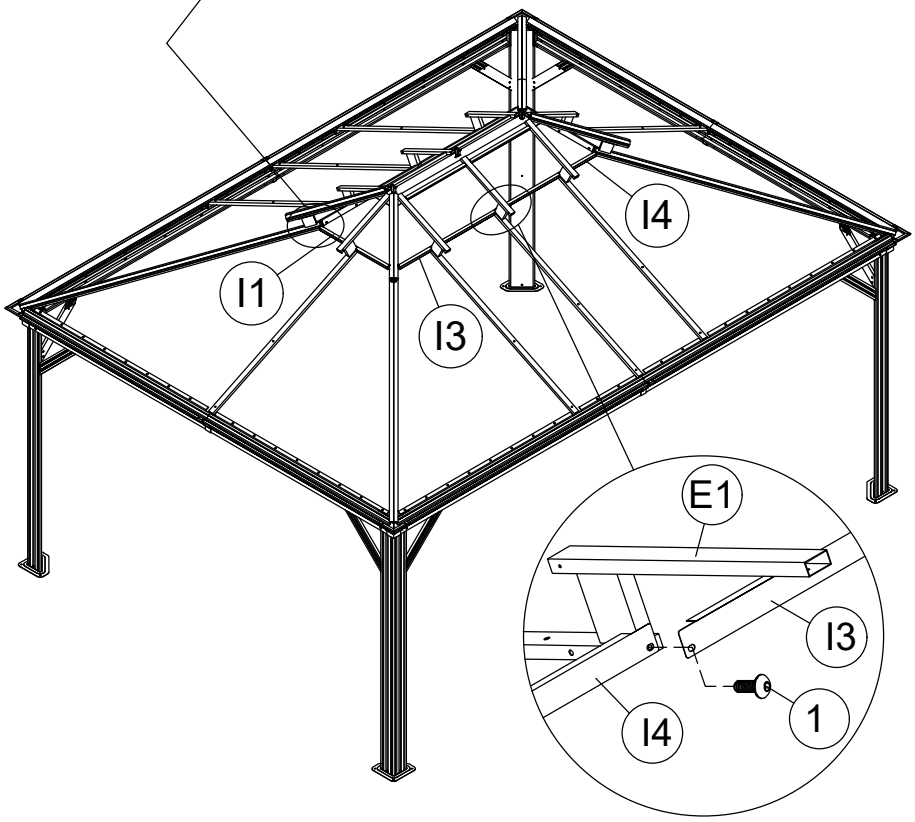

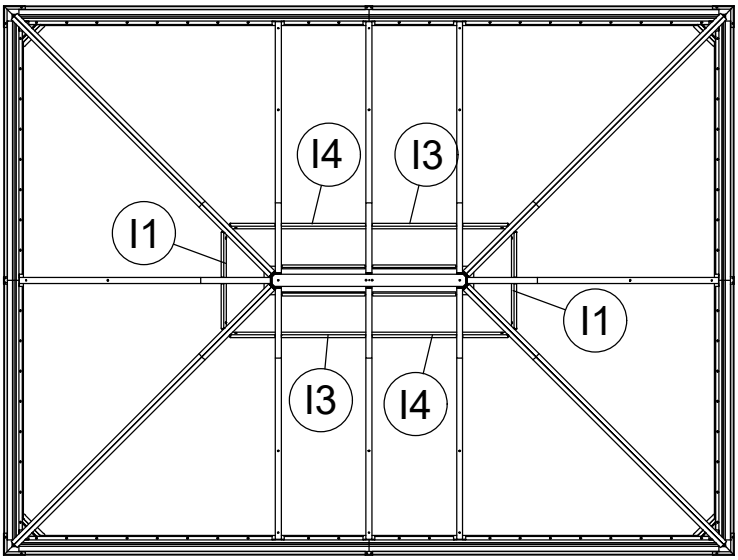

G1 2x

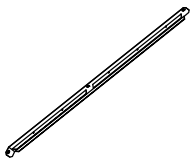

G3 2x

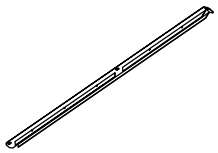

G4 2x

N 4x

N1 2x

M6x15

1 12x

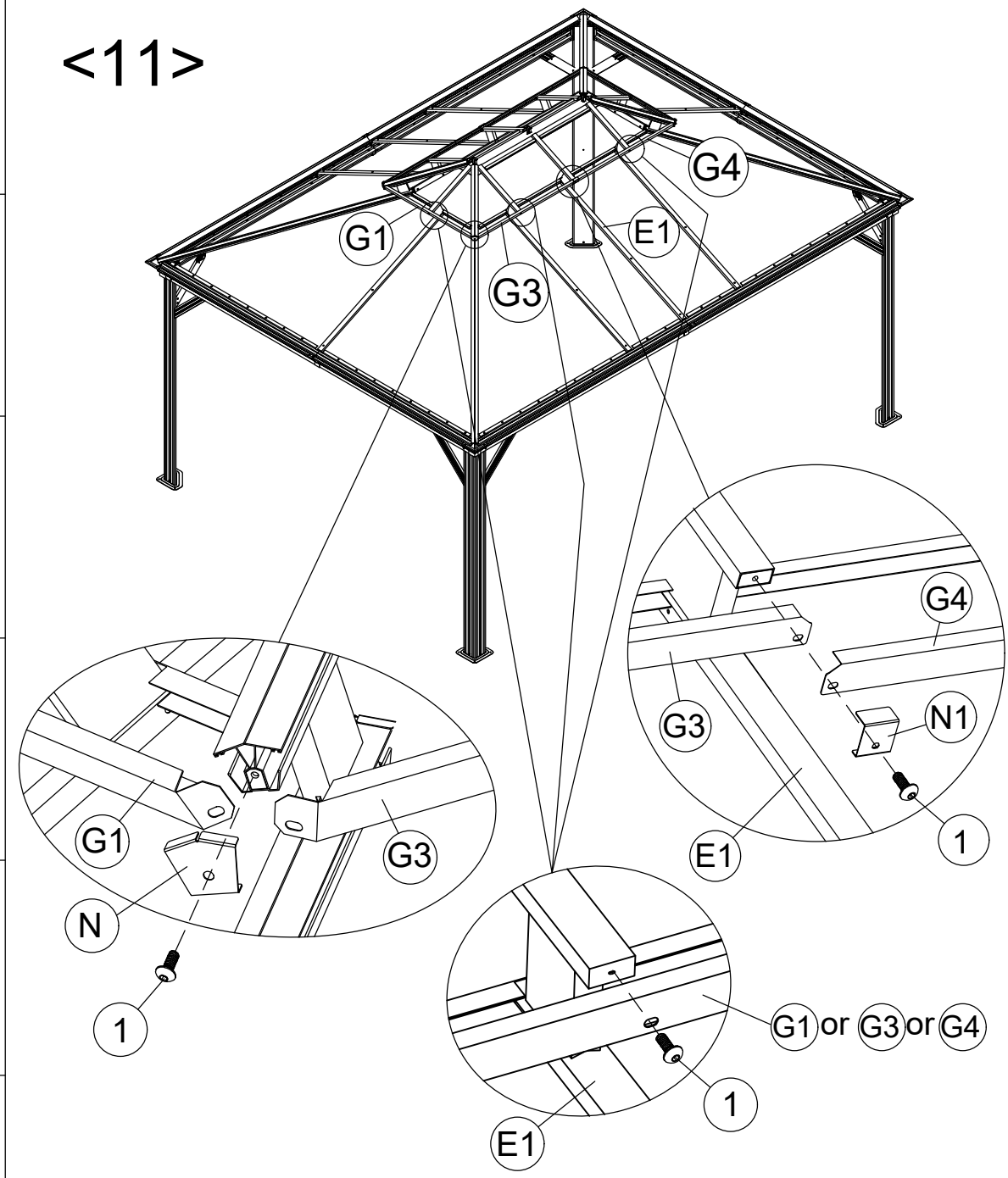

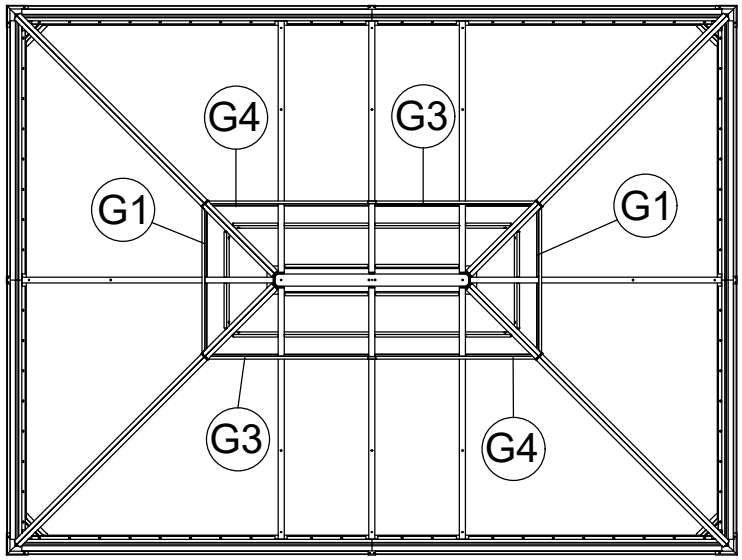

S1 2x

S2 2x

R1 2x

R2 2x

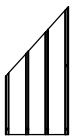

R3 2x

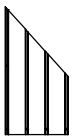

R4 2x

R5 2x

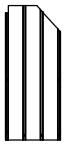

R6 2x

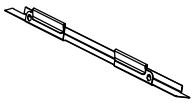

Z 32x

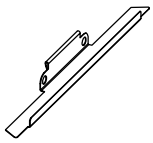

Z1 4x

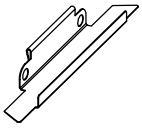

Z2 4x

<12>

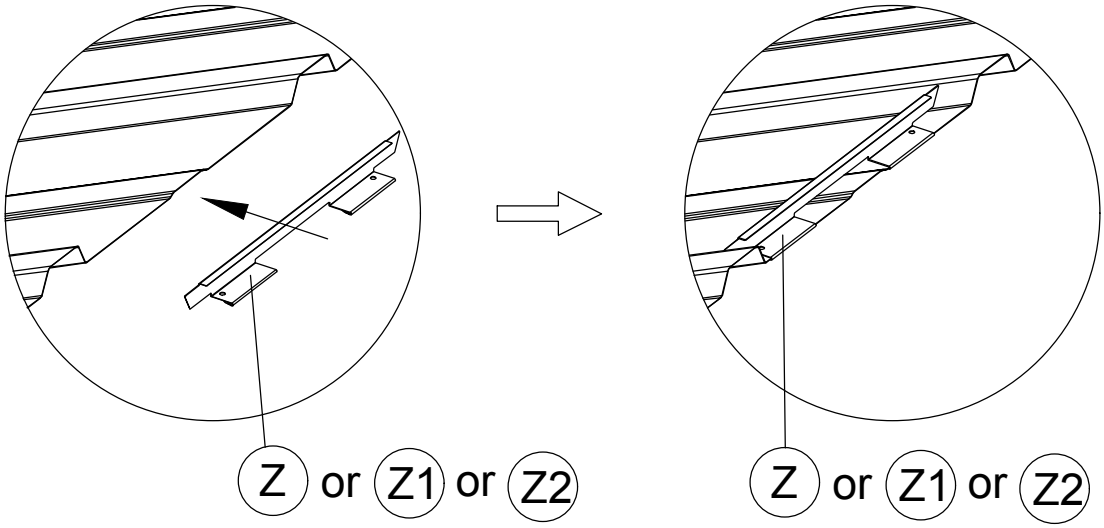

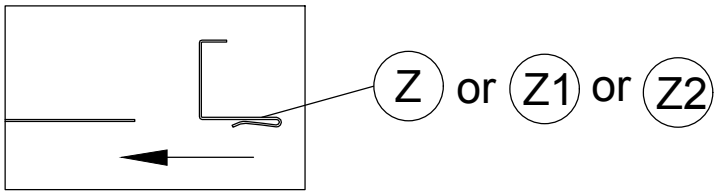

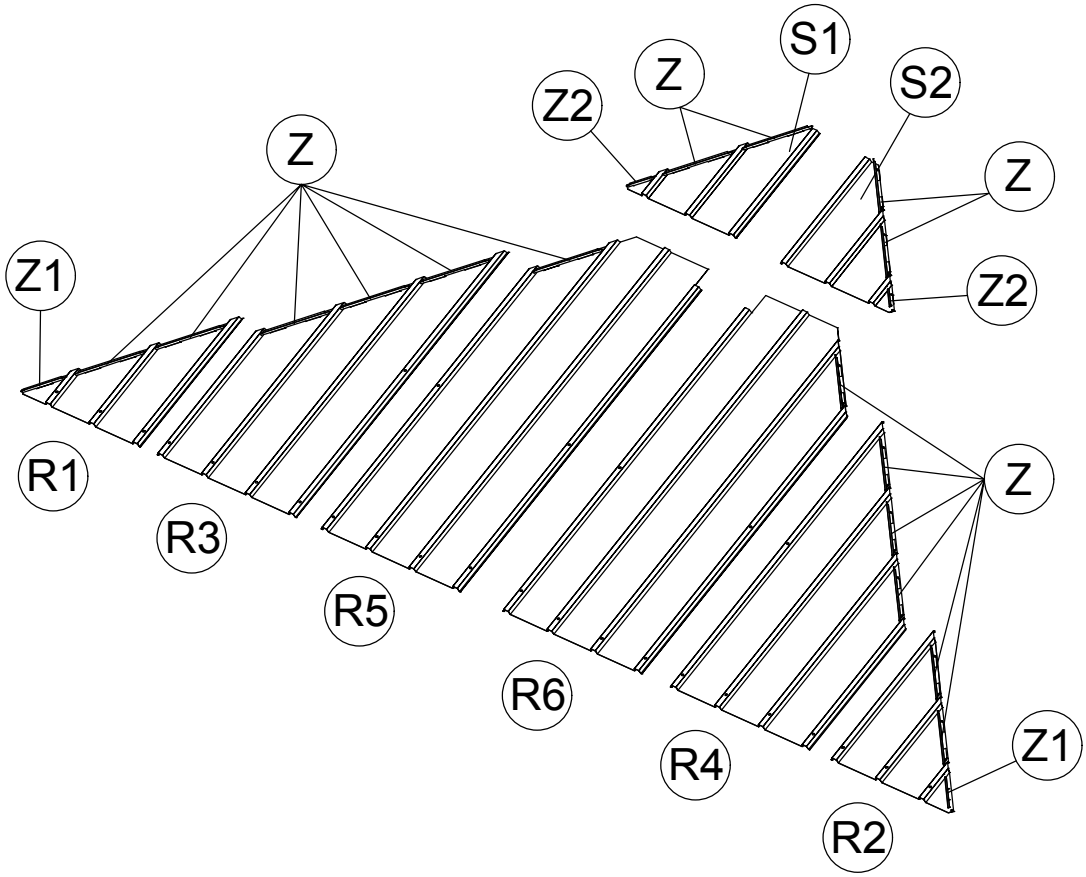

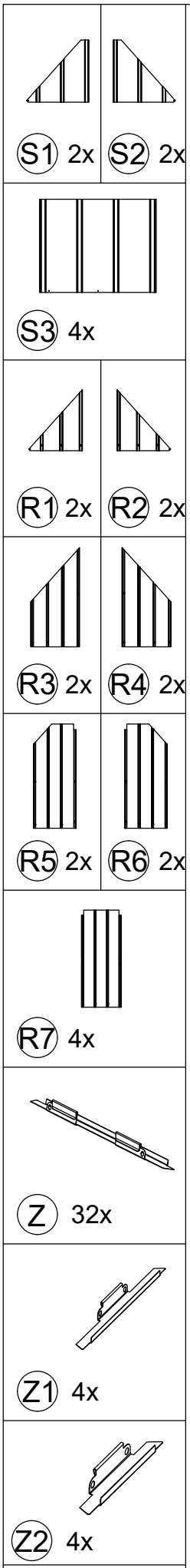
S1 2x
S2 2x
S3 4x
R1 2x
R2 2x
R3 2x
R4 2x
R5 2x
R6 2x
R7 4x
Z 32x
Z1 4x
Z2 4x

<13>

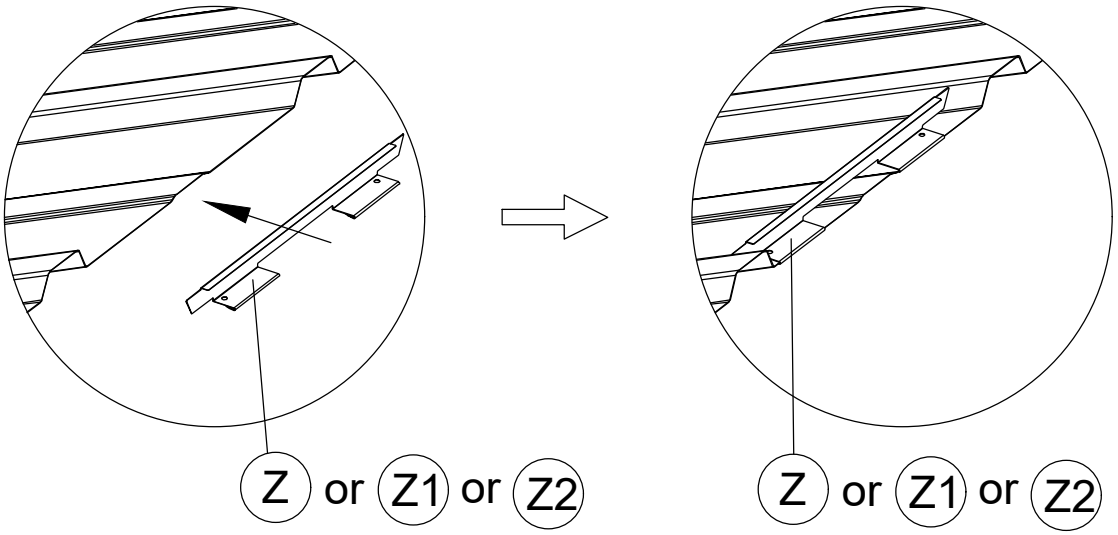
Z or Z1 or Z2
Z or Z1 or Z2

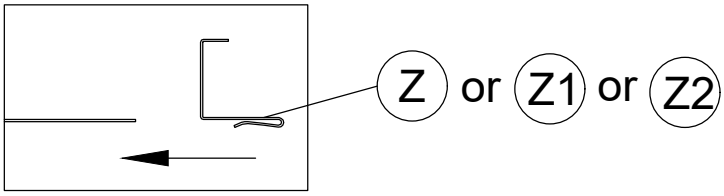
Z or Z1 or Z2

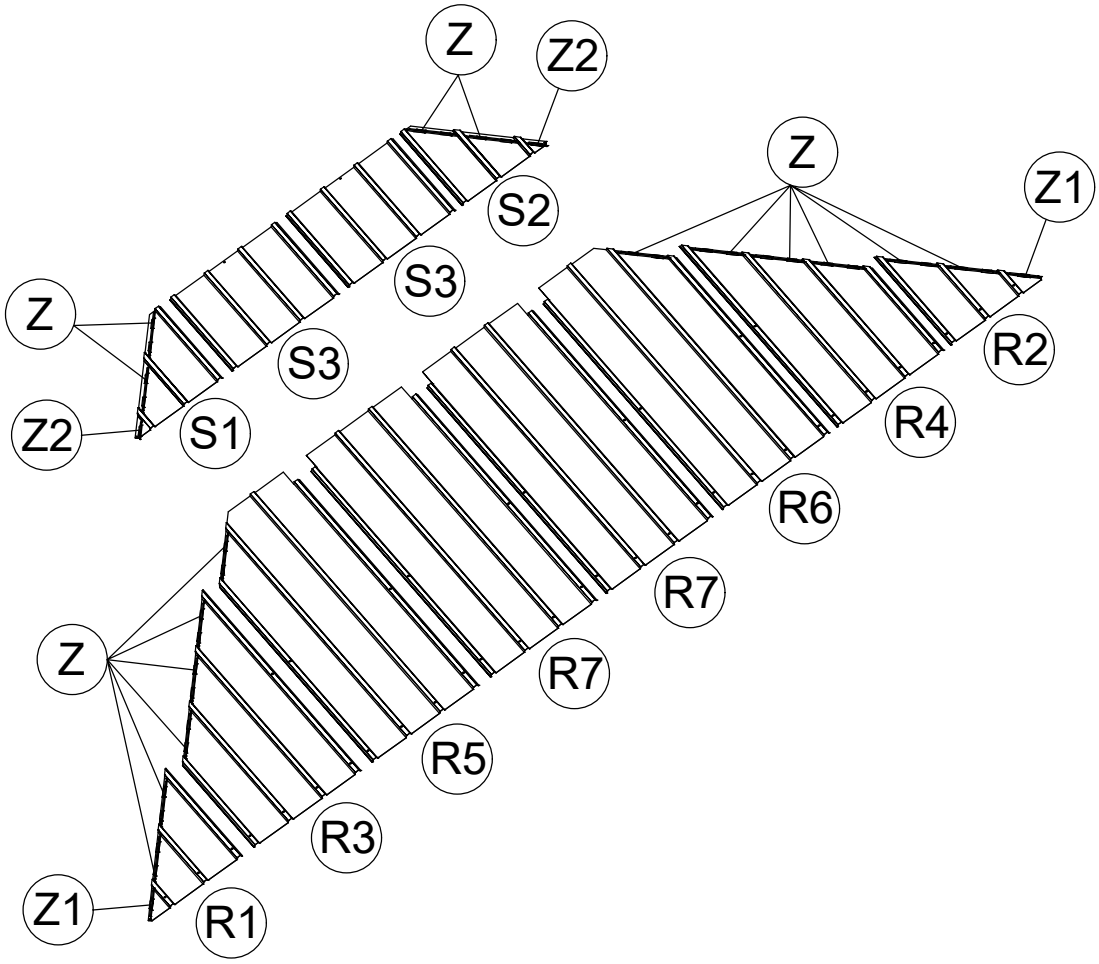
Z
Z2
S2
S3
Z
S3
Z2
S1
Z
Z1
R2
R4
R6
R7
R7
R5
R3
Z
Z1
R1

<14>

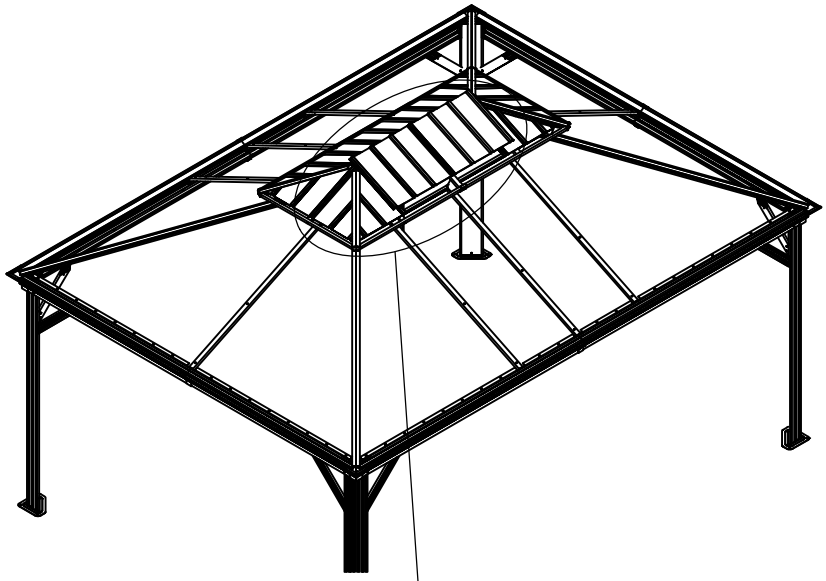

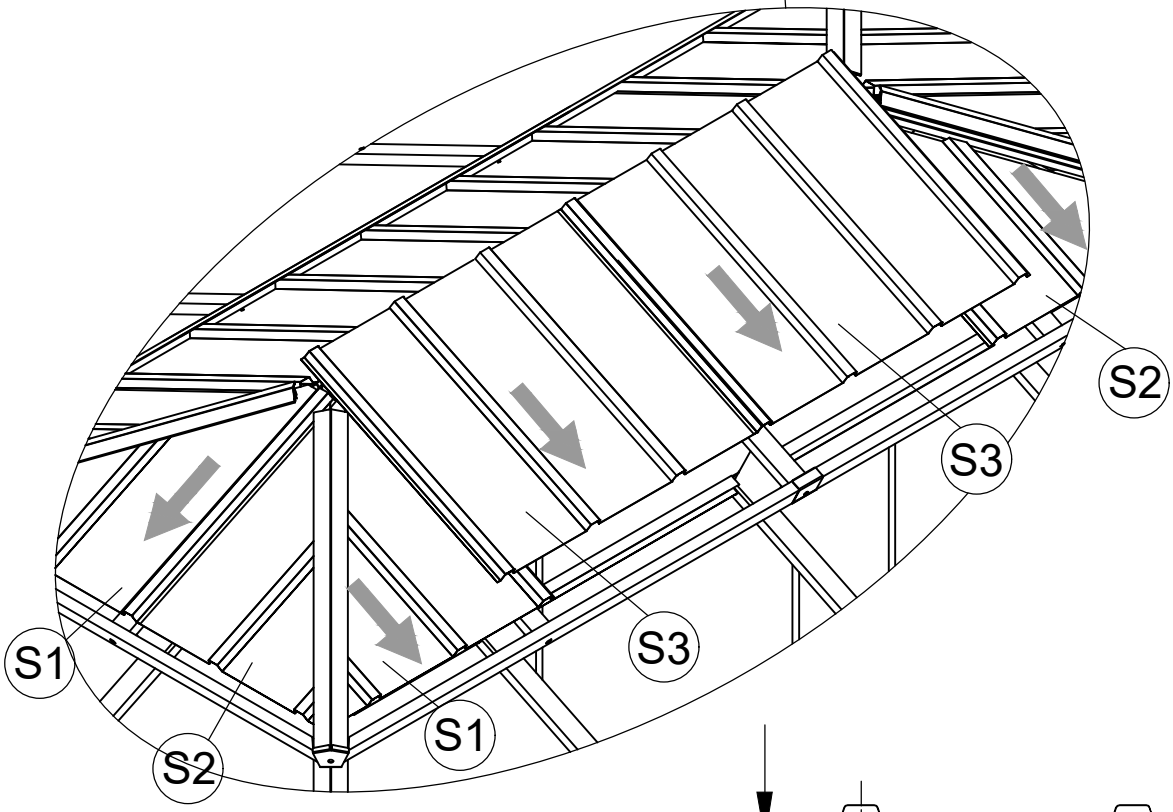

When installing the Roof plates (S2) onto short side, pls detach the right end of Roof Rib(G1) first. And then install the right end of Roof Rib (G1) again after S2 is installed.

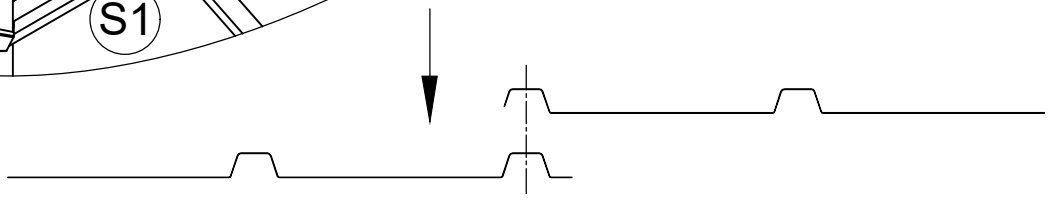

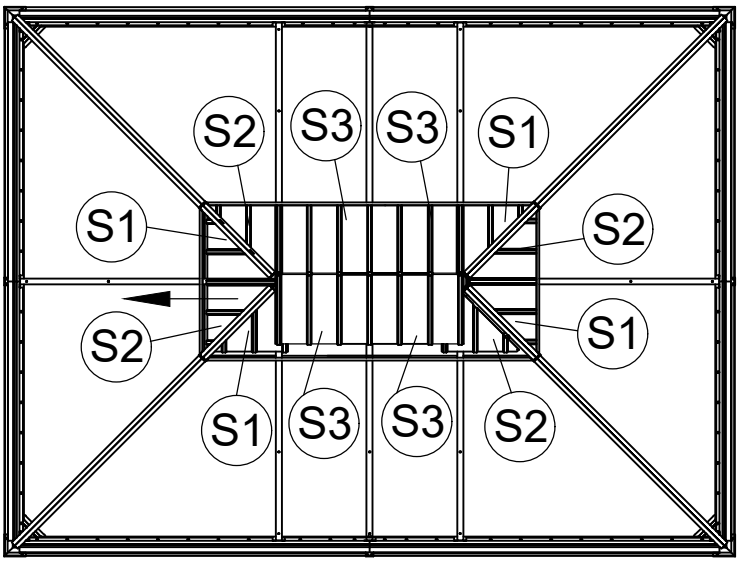

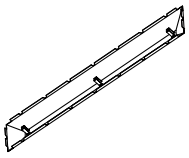

M3b 1x

5 2x

M6x15

1 3x

Za 2x

<15>

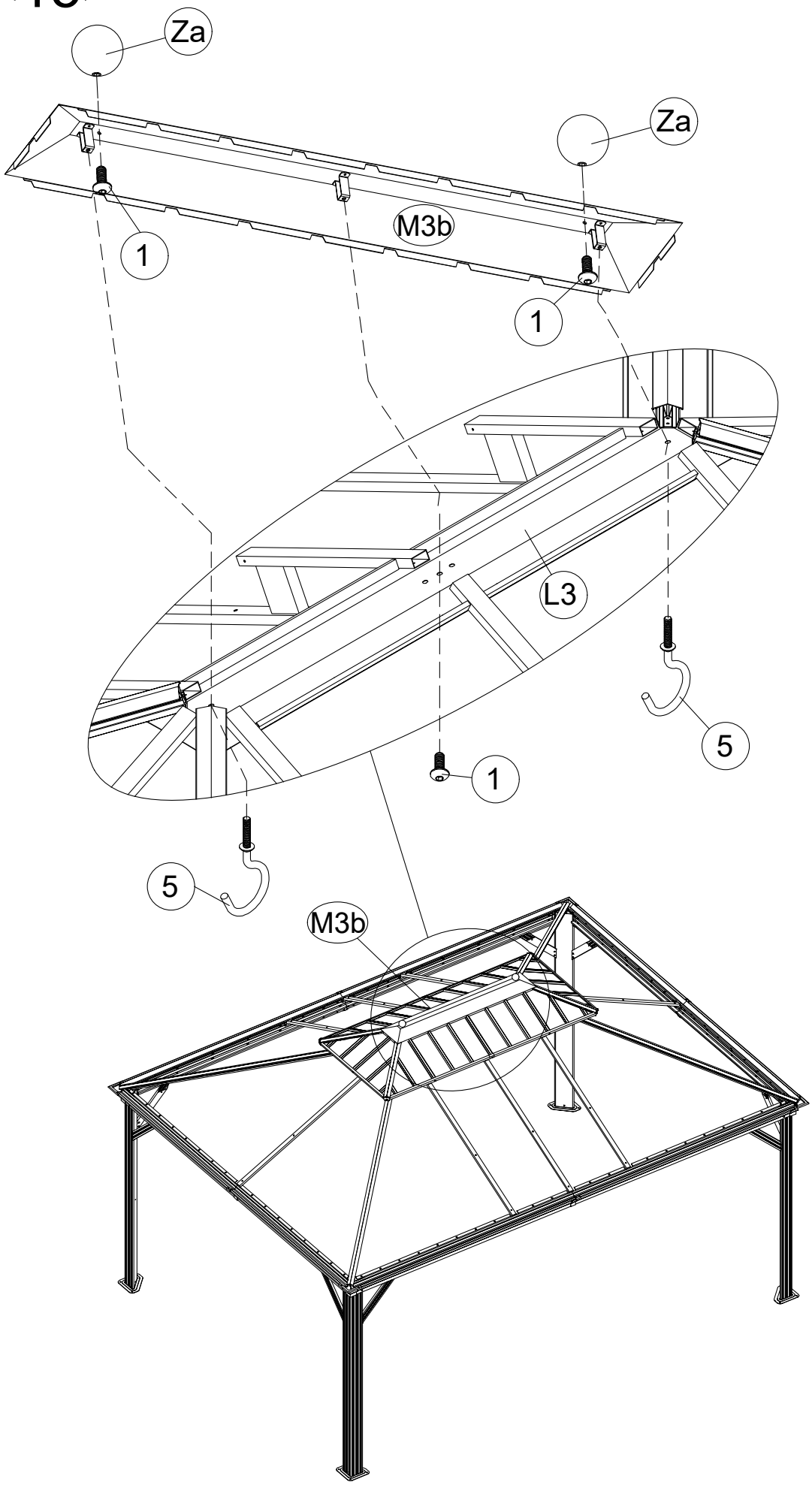

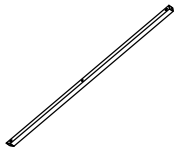

F1 8x

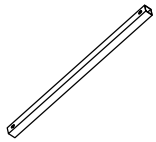

F2 4x

W 4x

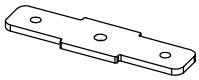

W1 8x

M6x15

1 36x

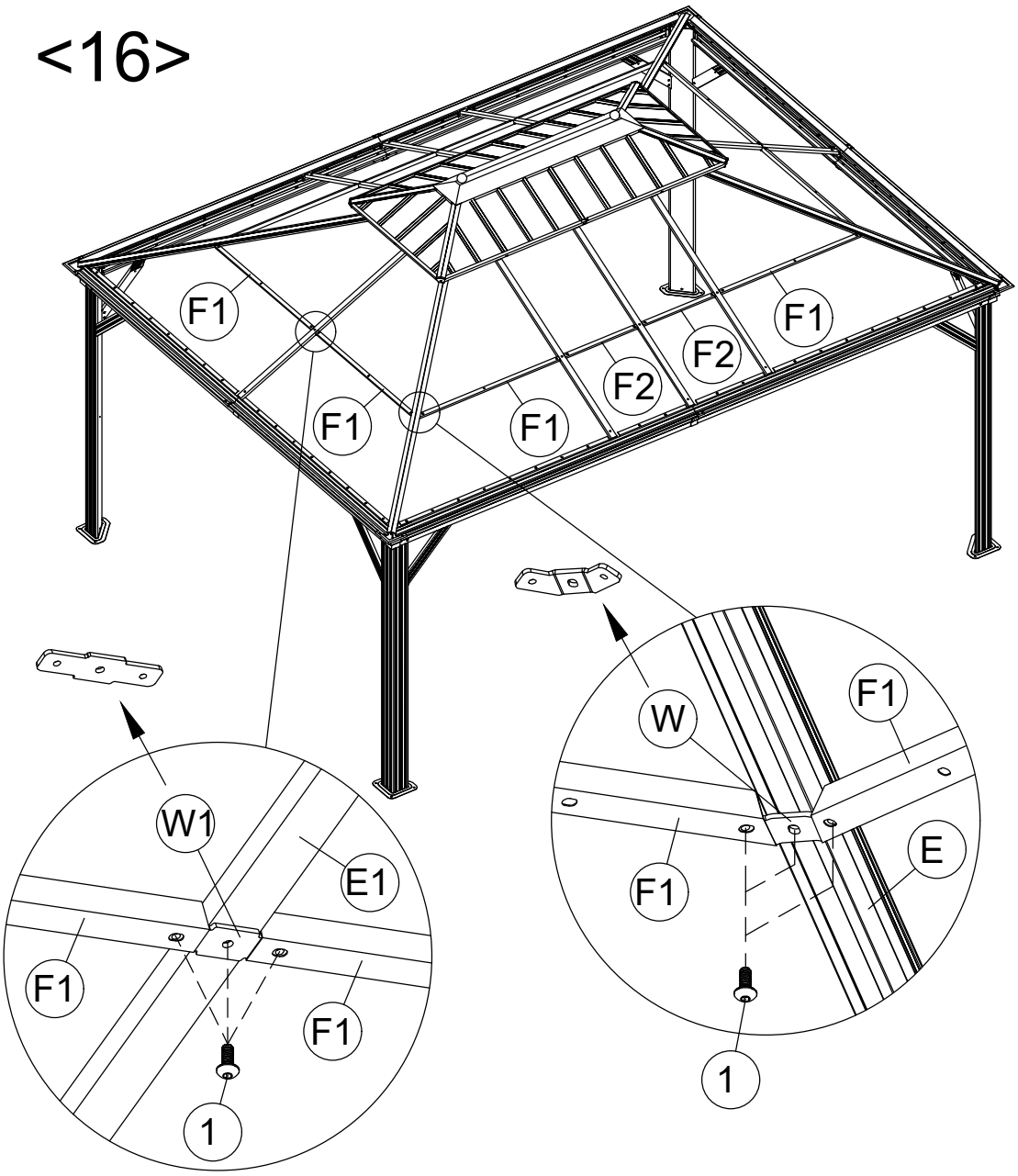

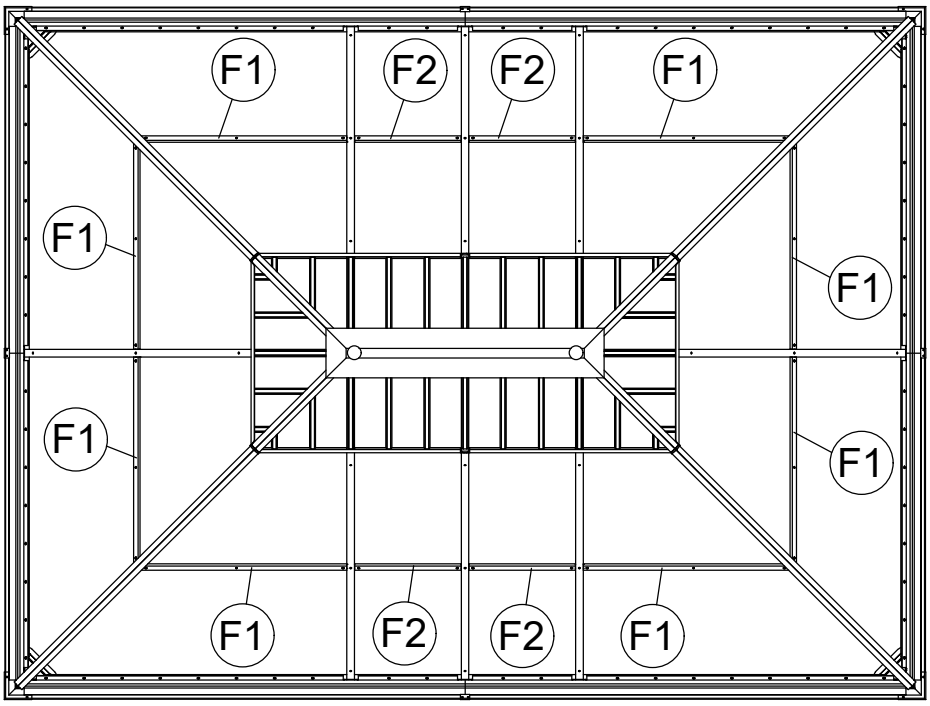

<17>

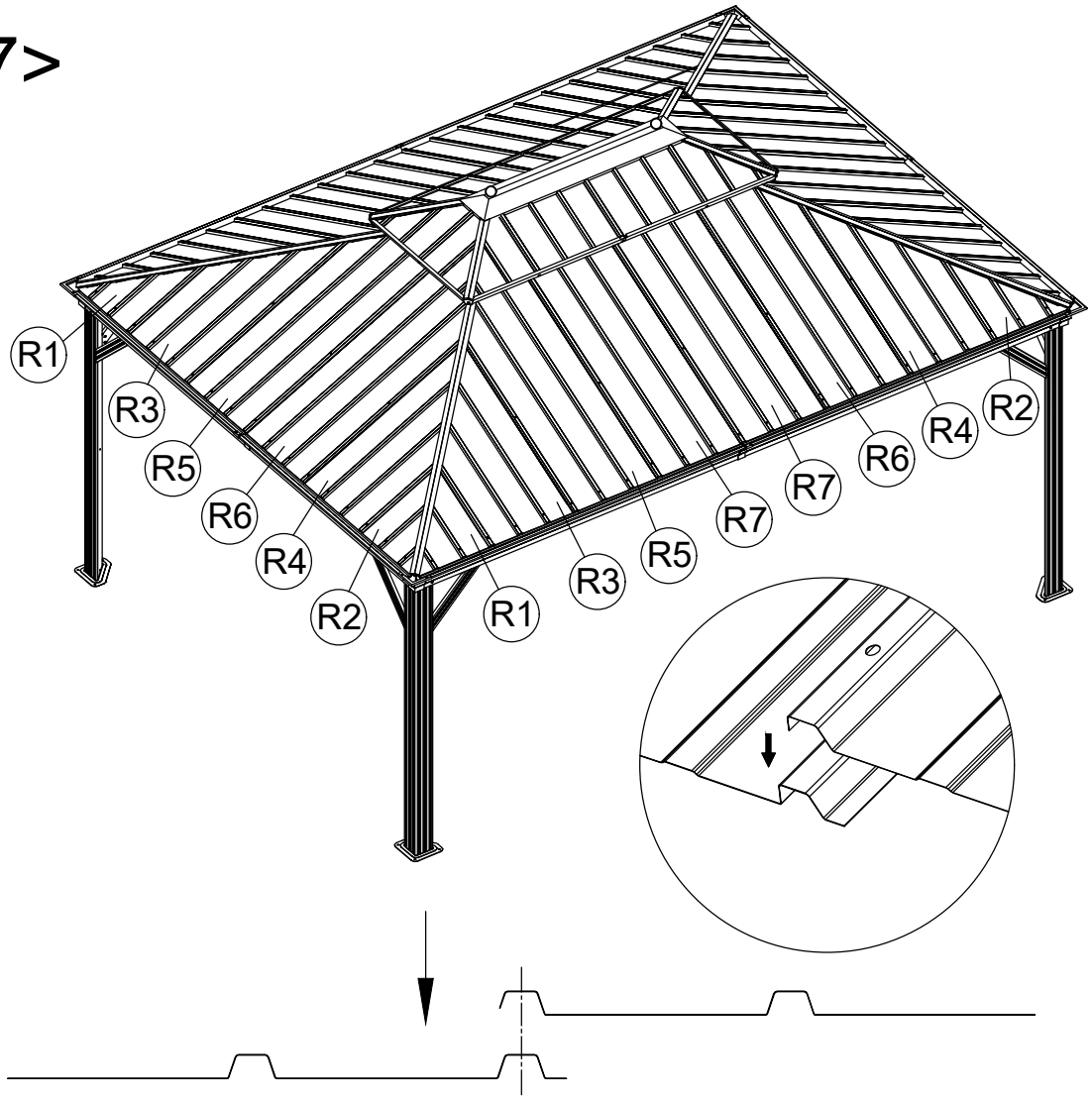
R1
R3
R5
R6
R4
R2
R1
R3
R5
R7
R7
R6
R4
R2

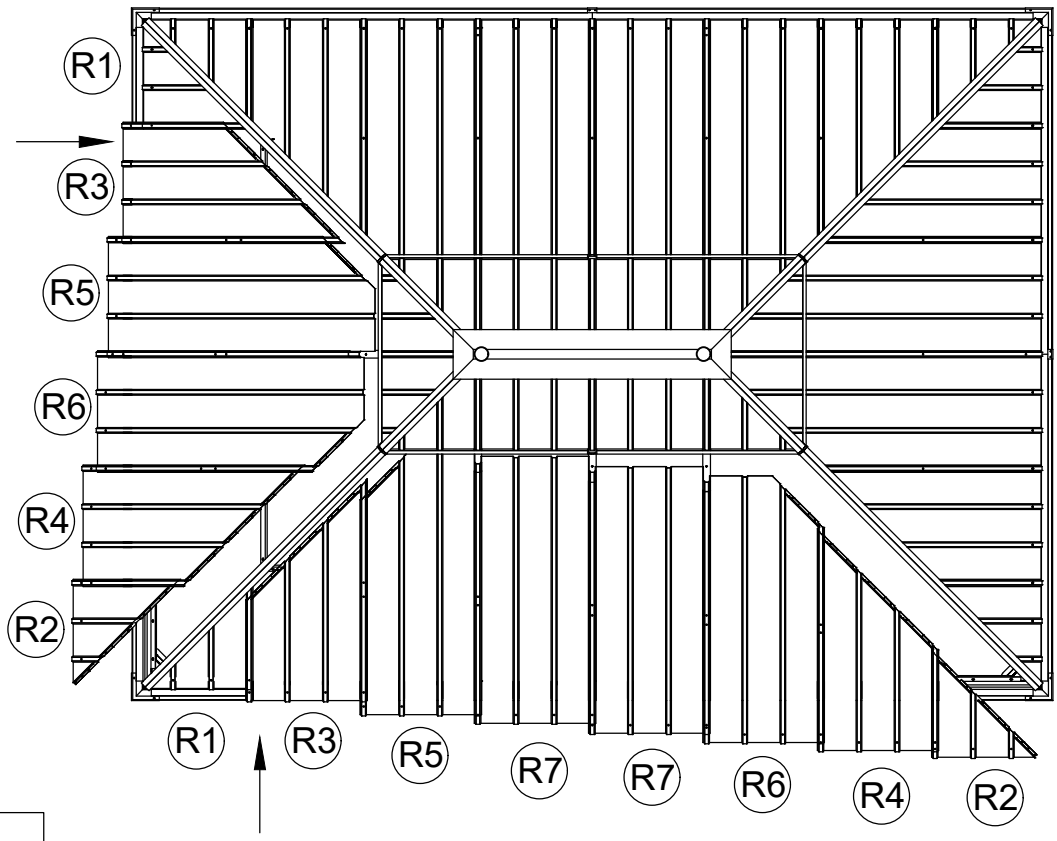
R1
R3
R5
R6
R4
R2
R1
R3
R5
R7
R7
R6
R4
R2

<18>

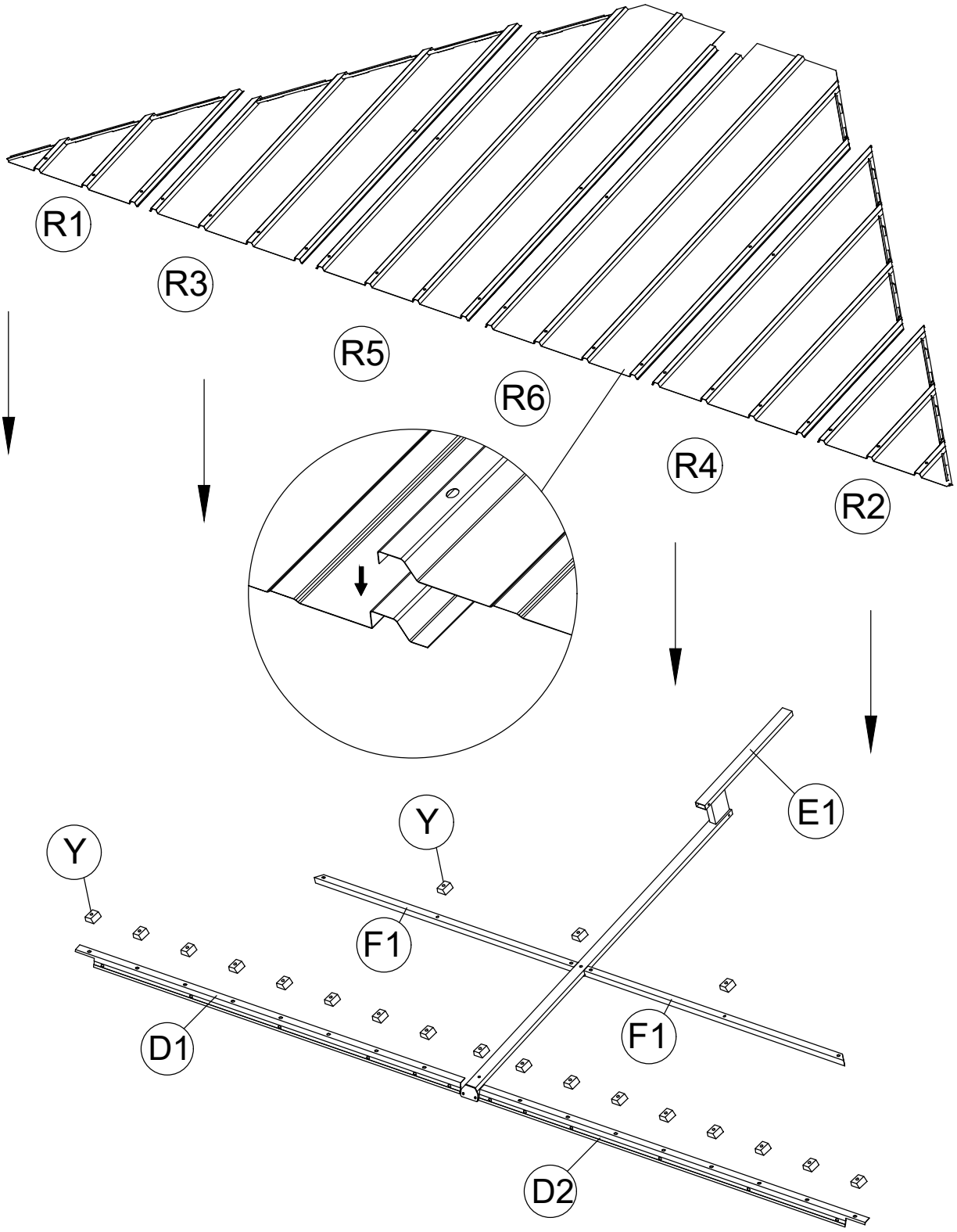

<19>

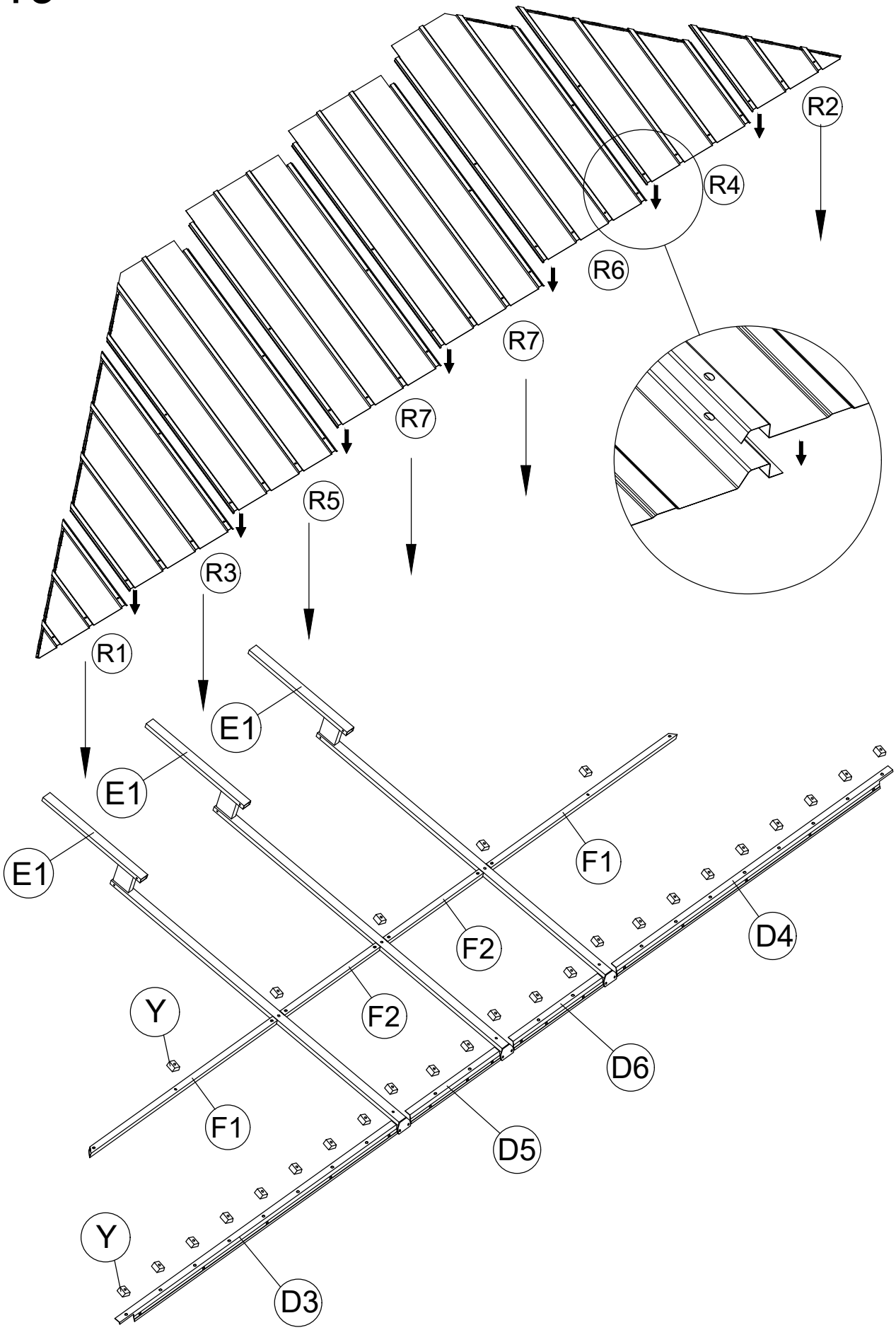

Y 96x

M6x23

2 72x

M6x25

3 8x

M6x42

6 8x

M6x47

7 8x

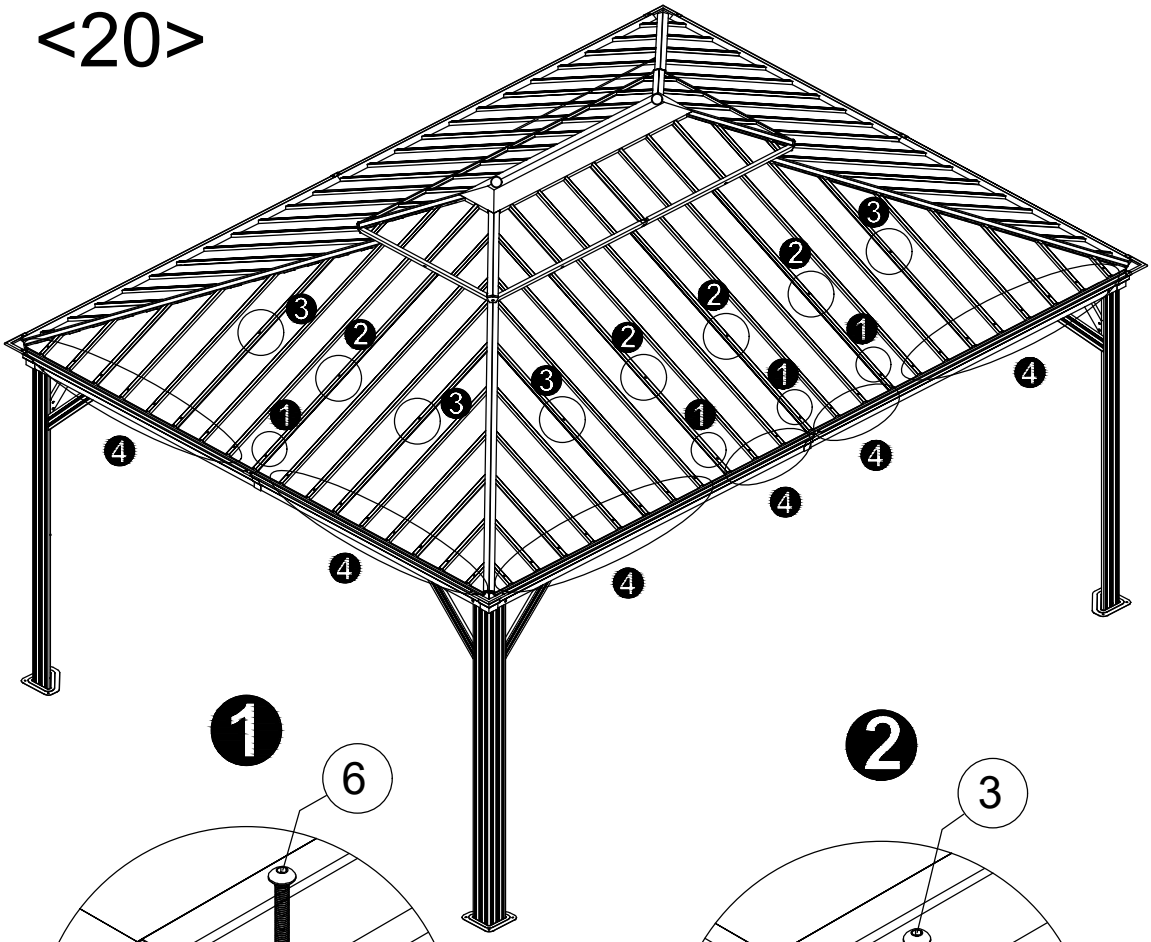

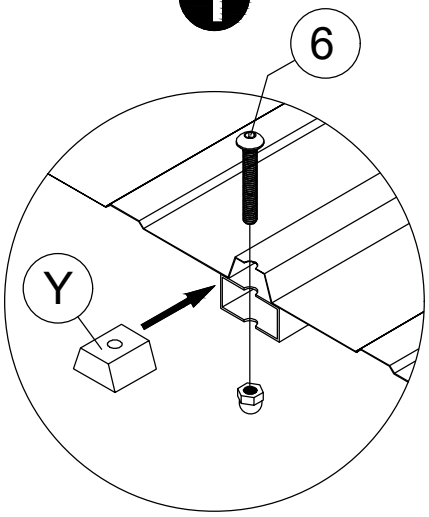

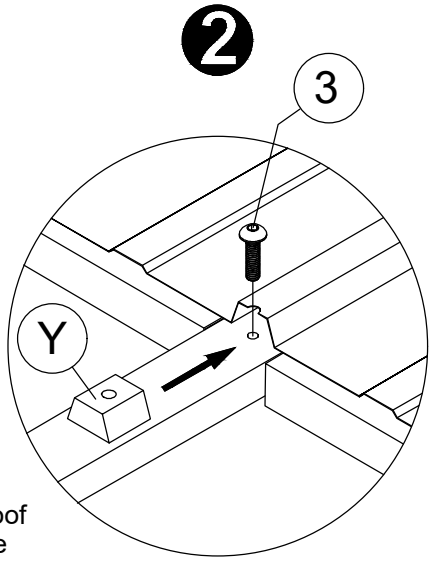

Note: When installing the roof top plates,if the roof plates are slightly uneven, pls press the screws from the top of the plates until the bottom screw thread is exposed by 3 to 4mm, and then screw on the nut.

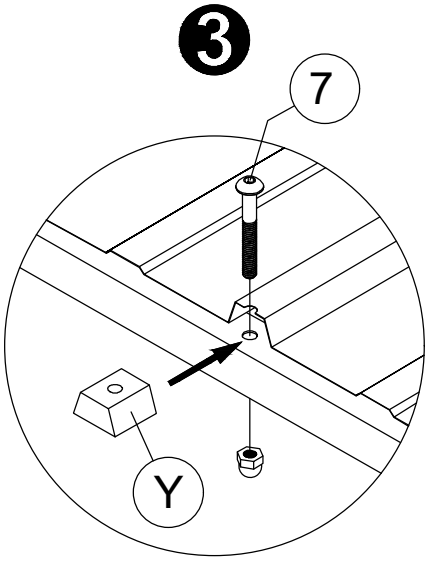

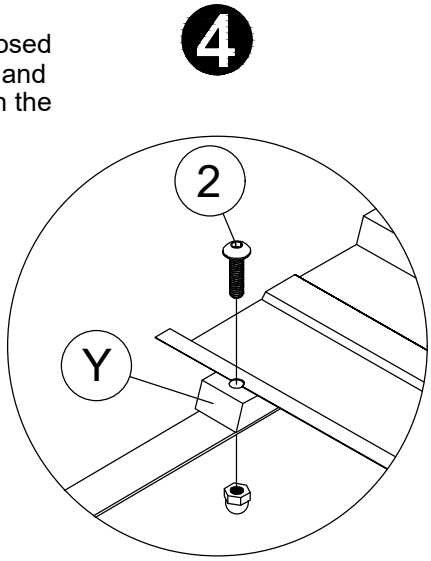

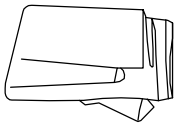

T 4x

<21>

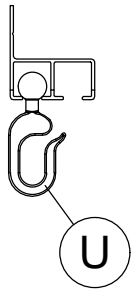

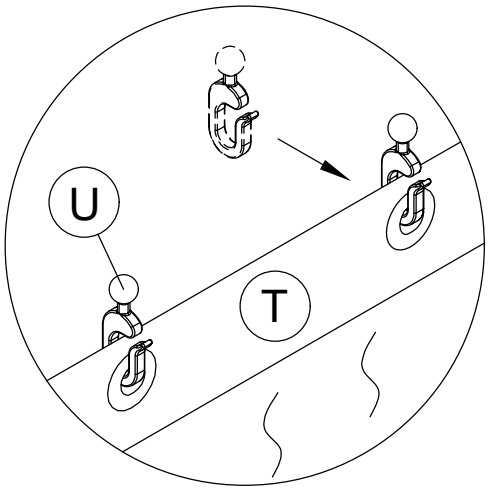

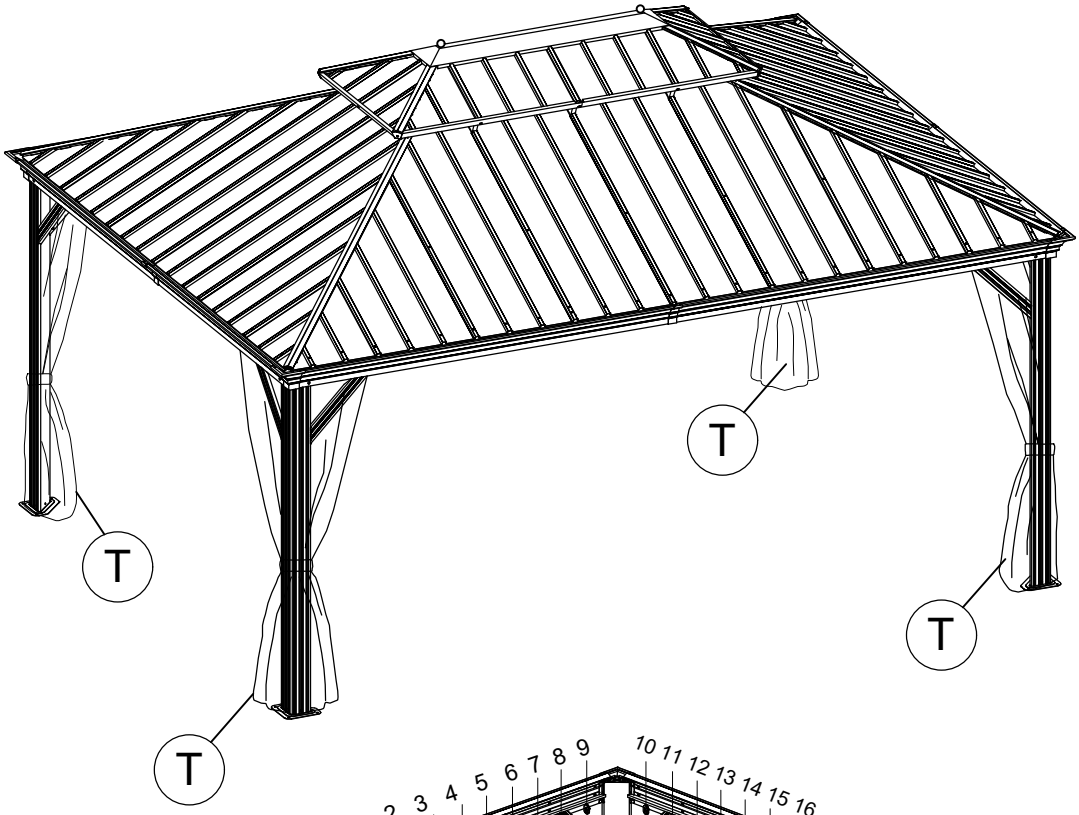

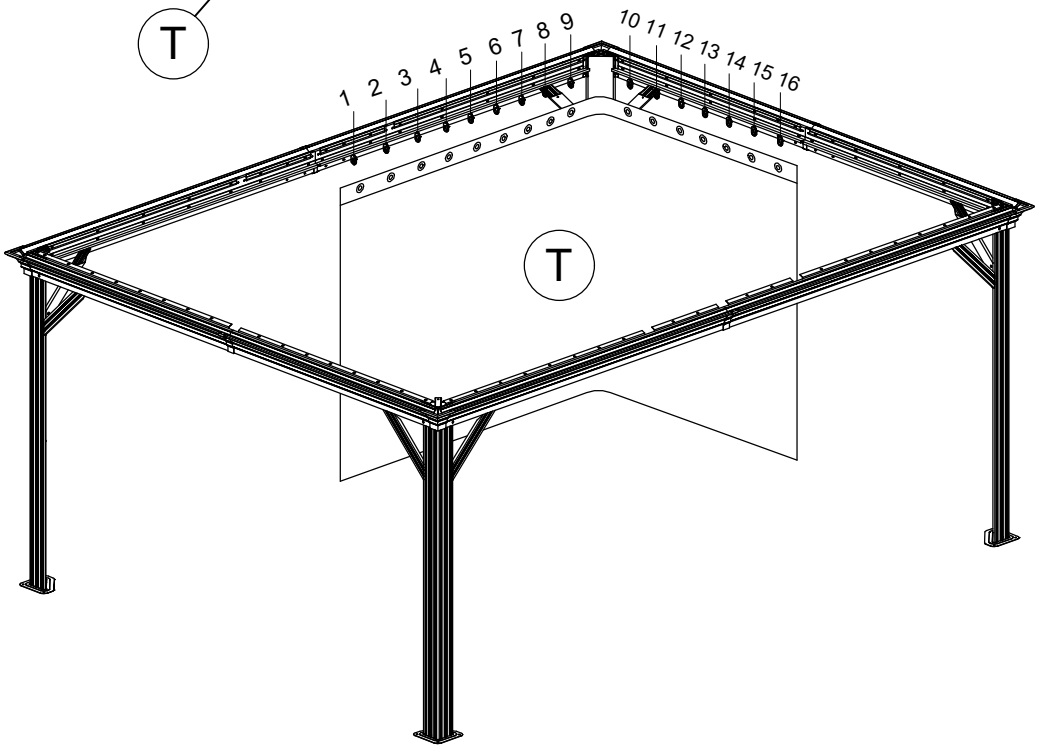

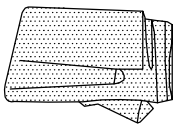

T1 4x

<22>

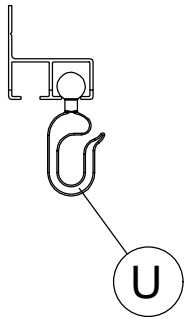

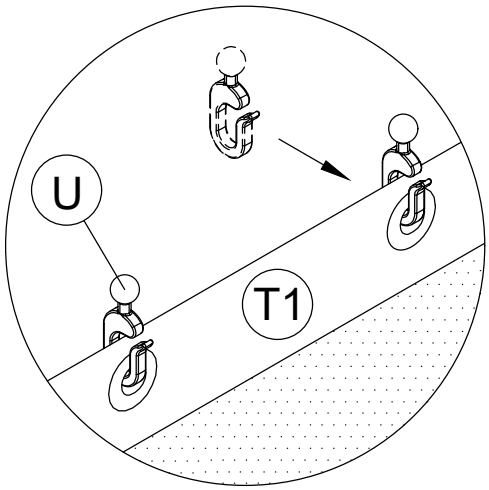

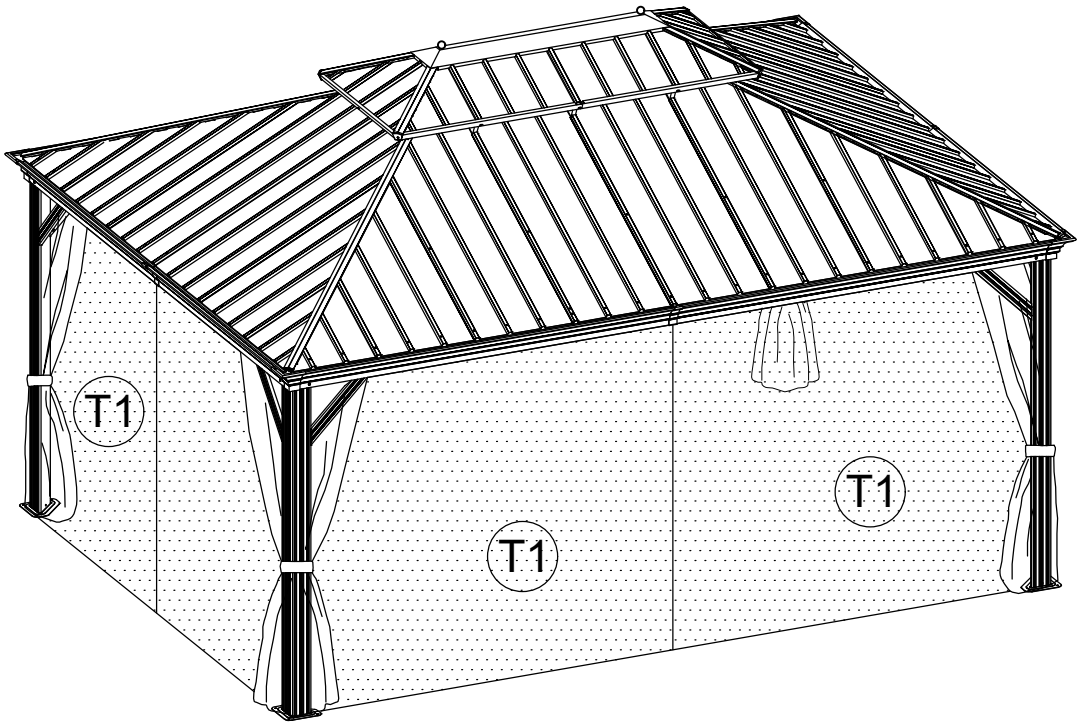

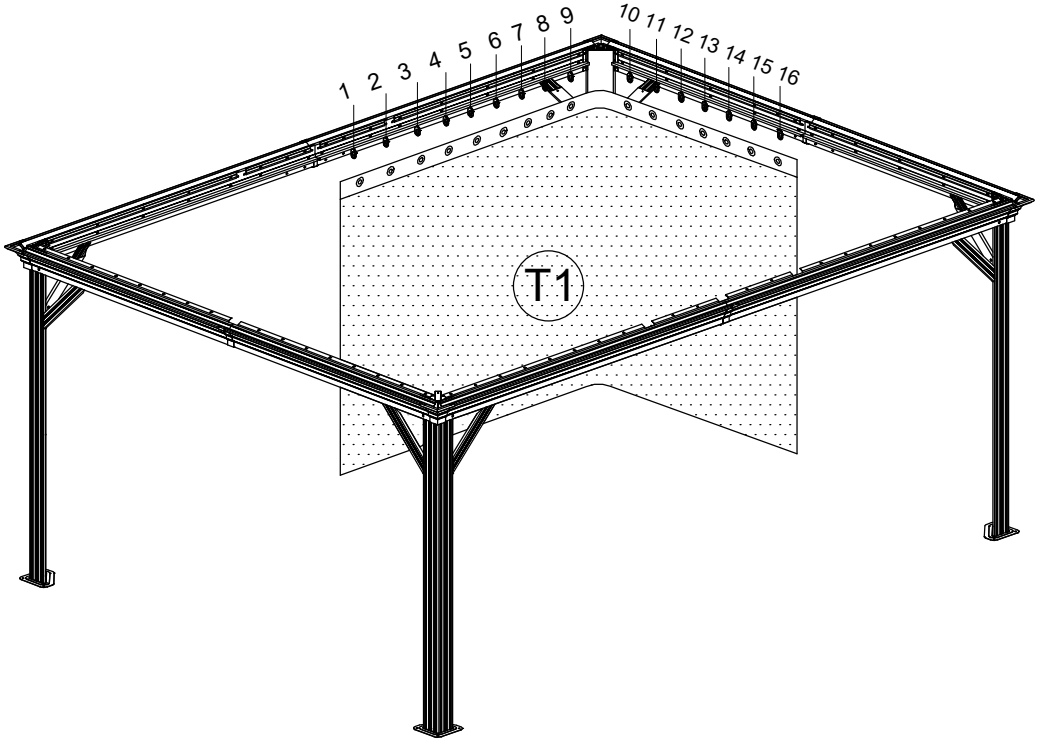

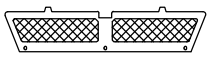

V1 2x

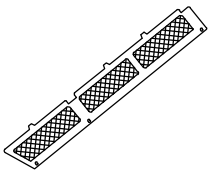

V3a 2x

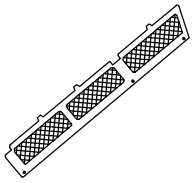

V3b 2x

M6x10

9 8x

<23>

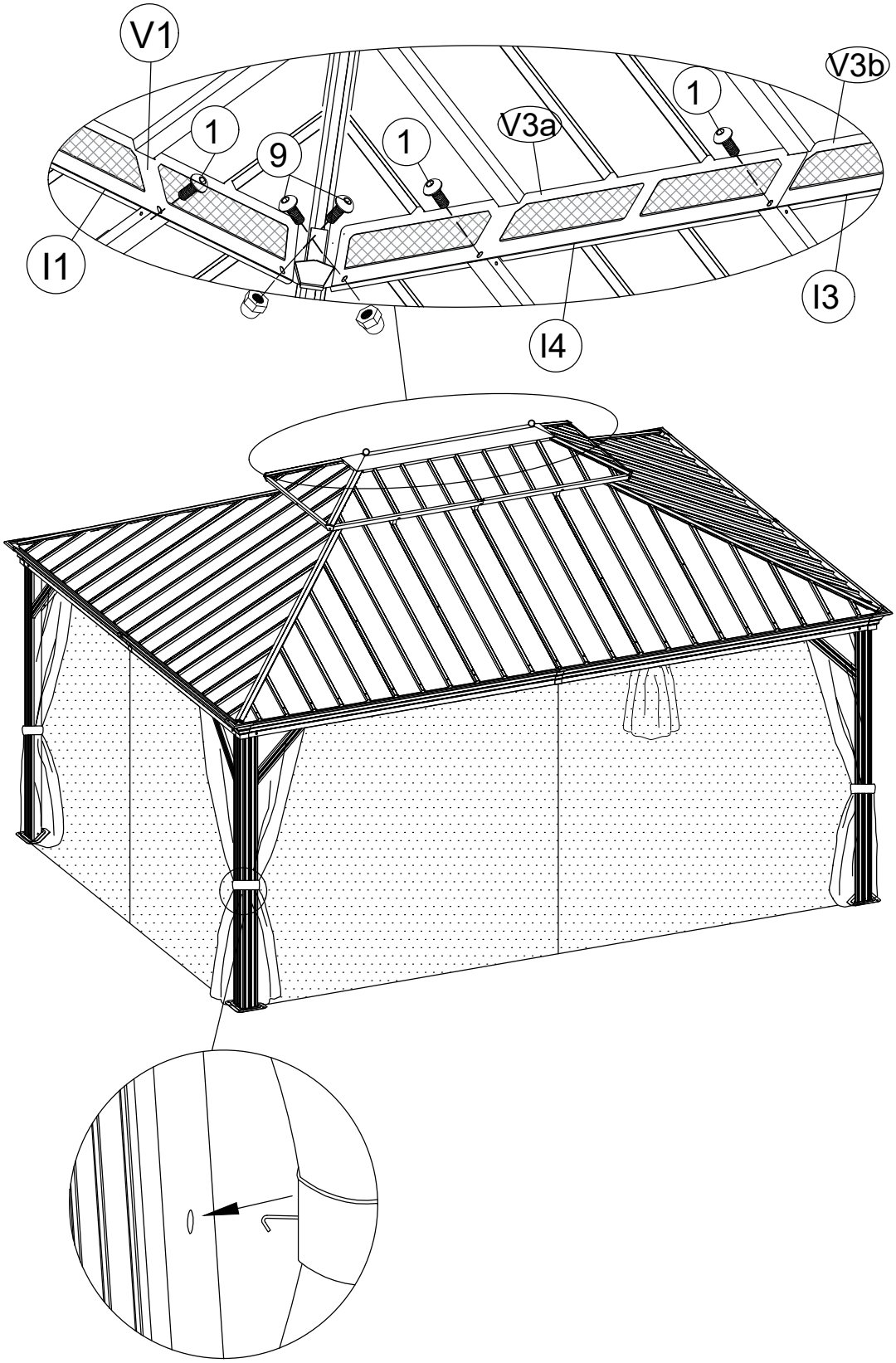

Carton-1/5	
Part	Qty
B5	2
B6	2
C5	2
C6	2
A	4
D1	2
D2	2
D3	2
D4	2
D5	2
D6	2
J	4
Y	96
U	128

Carton-2/5	
Part	Qty
E	4
E5	4
E1	8
F1	8
F2	4
G1	2
G3	2
G4	2
I1	2

Carton-2/5	
Part	Qty
I3	2
I4	2
H	4
H1	4
P	4
Z	64
Z1	8
Z2	8

Carton-3/5	
Part	Qty
B1	2
B2	2
C1	2
C2	2
L3	1
M3b	1
K	4
K1	4
W	4
W1	8
W3	8
W4	8
V	4
N	8
N1	2
V1	2

Carton-3/5	
Part	Qty
V3a	2
V3b	2
T	4
T1	4
1.2.3.4.5.6.7.8.9. 10.11.12.13.14.15	1
Za	2

Carton-4/5	
Part	Qty
R3	4
R4	4
R5	4
R6	4
R7	4

Carton-5/5	
Part	Qty
R1	4
R2	4
S1	4
S2	4
S3	4