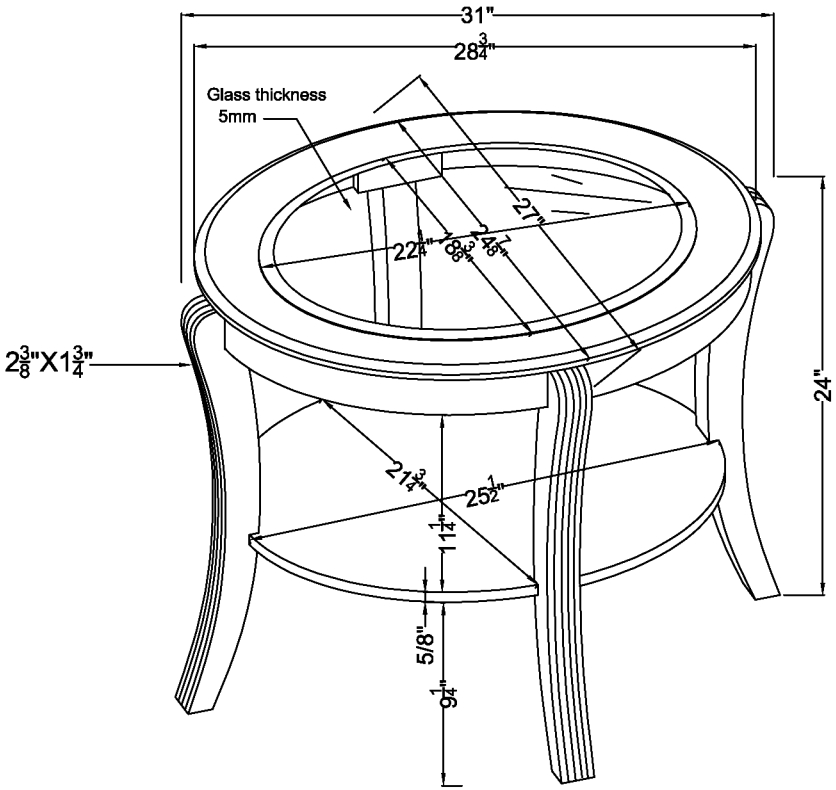
31"
28 3/4"
Glass thickness
5mm
27"
22 1/4"
18 3/8"
24 1/8"
2 3/8"X1 3/4"
24"
21 3/4"
25 1/2"
11 1/4"
5/8"
9 1/4"