TEAR SHEET



Fifi 10" Cordless Accent Lamp

Item # TOB 3660PBC-L-CL

Designer: Thomas O'Brien

Height: 10"

Width: 5.5"

Base: 3.25" Round

Finishes: ALB, CBZ, PBC, TS

Shade Treatments: L

Shade Details: 3.5" x 5.5" x 5.5"

Lightsource: Rechargeable LED w/ Touch Dimmer

Wattage: 1.7w (60 - 250lm)

Weight: 1 Pound

Note: Rechargeable LED Lightsource and Charging Cable Included | Reactive Ceramic Glazes Will Vary in Color and Texture

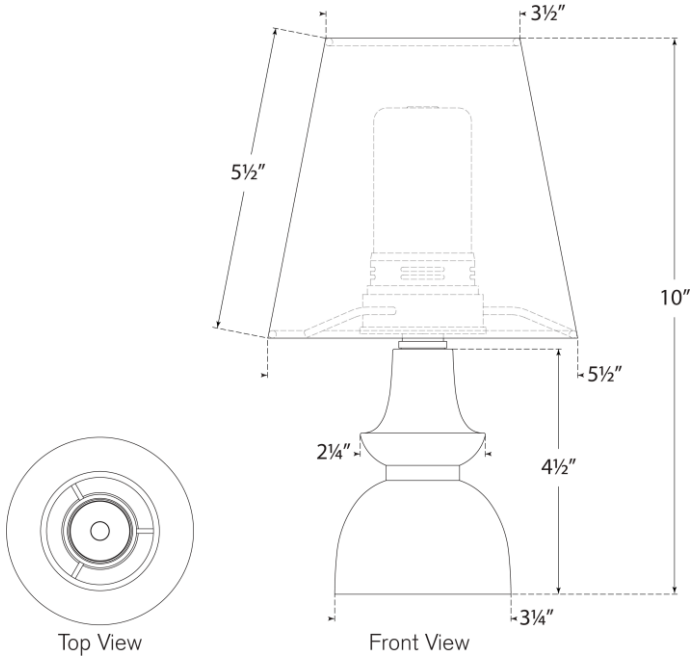

VISUAL COMFORT & CO.

DAMP LED