Assembling Manual

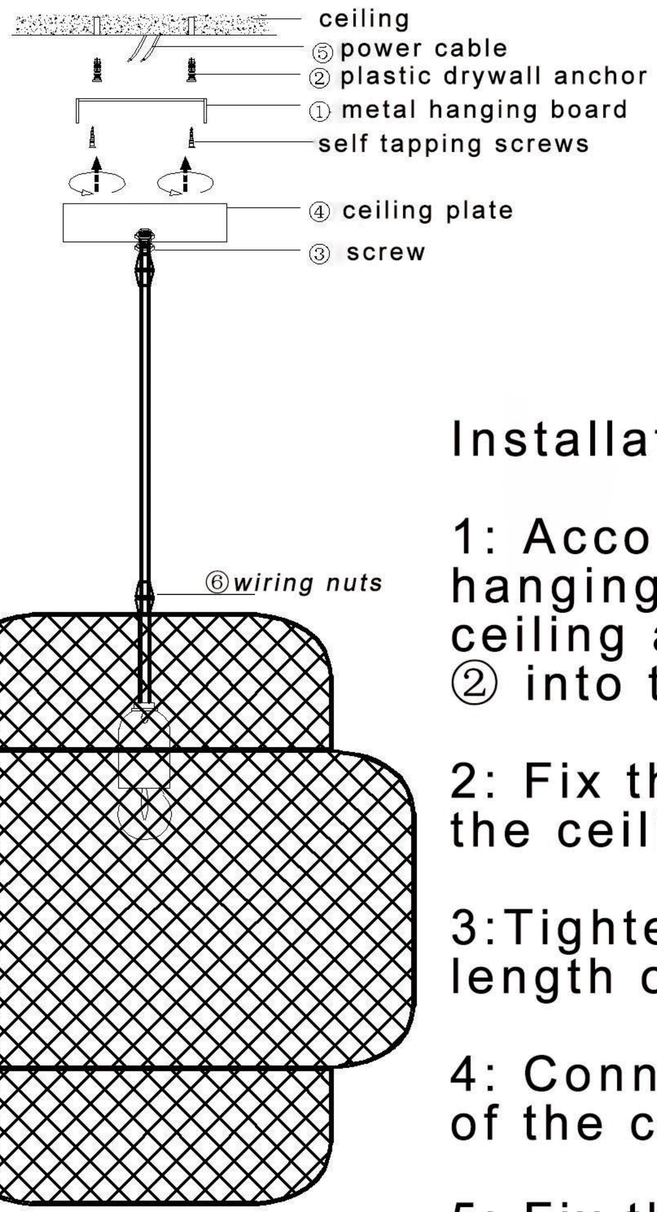

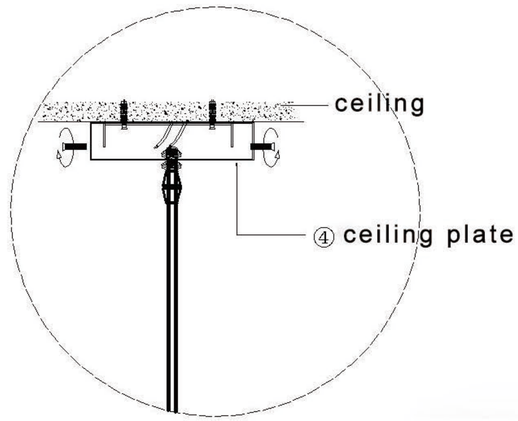

Installation steps:

1: According to the hole position of metal hanging board ① punched holes in the ceiling and insert plastic drywall anchor ② into the hole.

2: Fix the metal hanging board ① on the ceiling with self tapping screws

3:Tighten the wiring nuts ⑥ to adjust the length of the wire

4: Connect the cord with the power cord ⑤ of the ceiling.

5: Fix the ceiling plate ④ and install the bulb (E26/E27)