ASSEMBLY INSTRUCTION

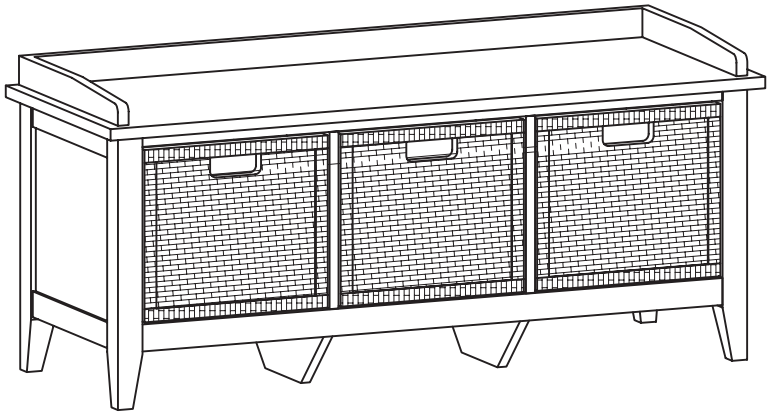

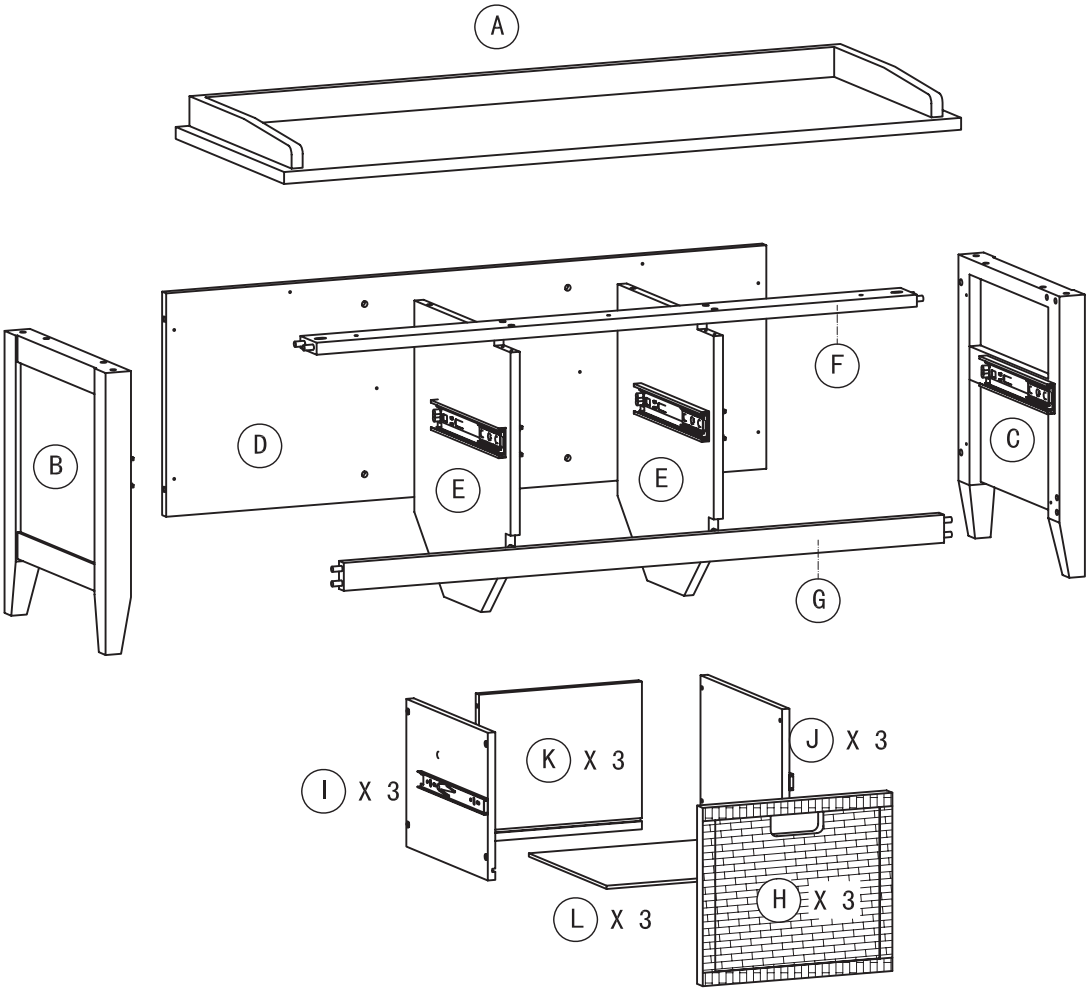

1 4 pcs	2 4 pcs	3 1 pc	4 14 pcs
5 28 pcs	6 31 pcs	7 2 pcs	8 16 pcs

Step 1

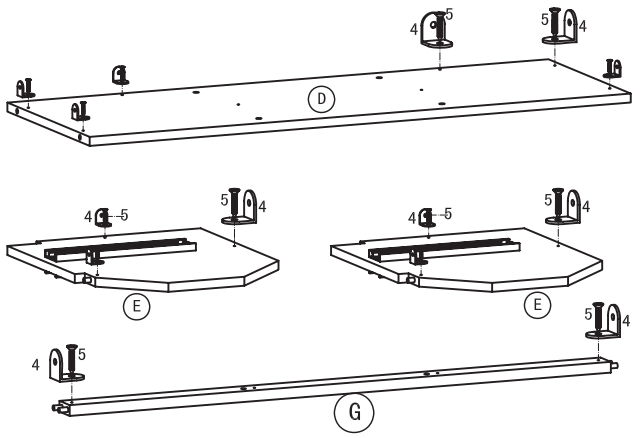

Step 2

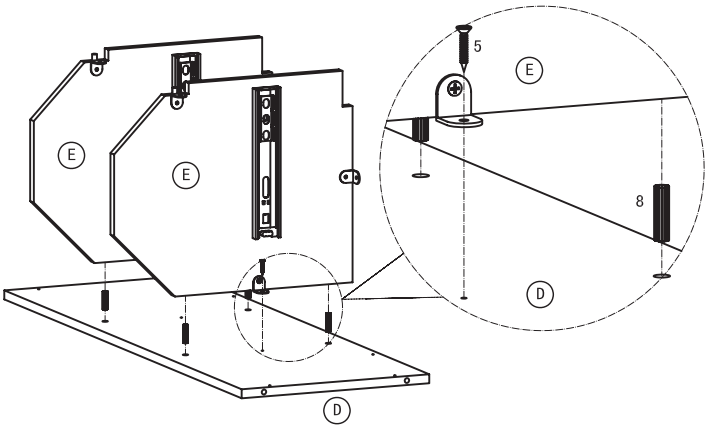

Step 3

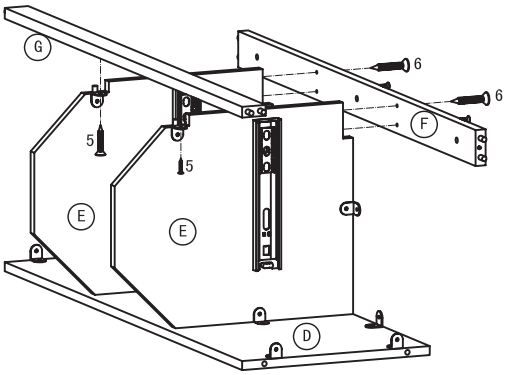

Step 4

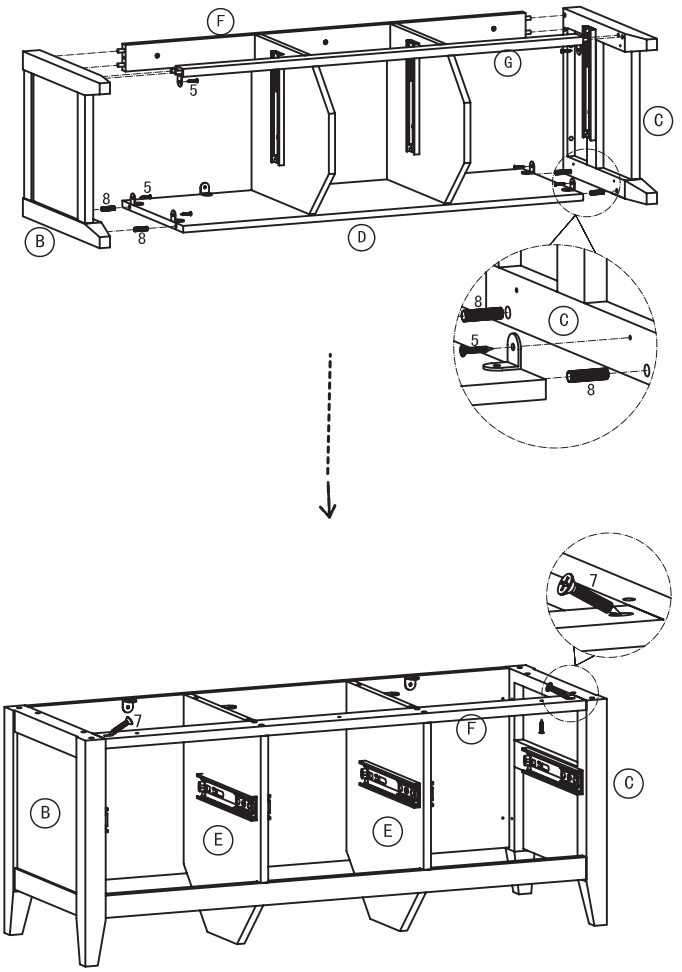

Step 5

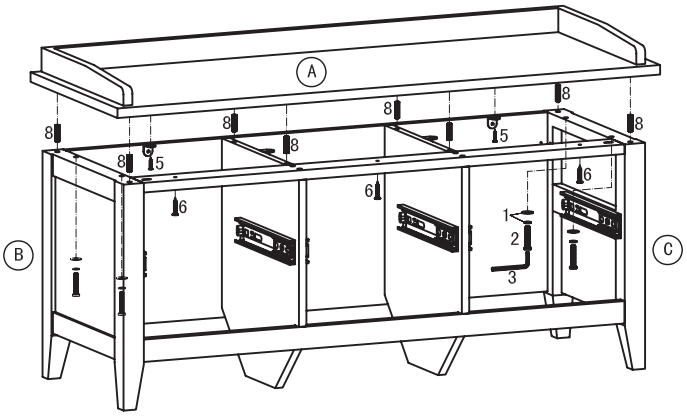

Step 6

x 3

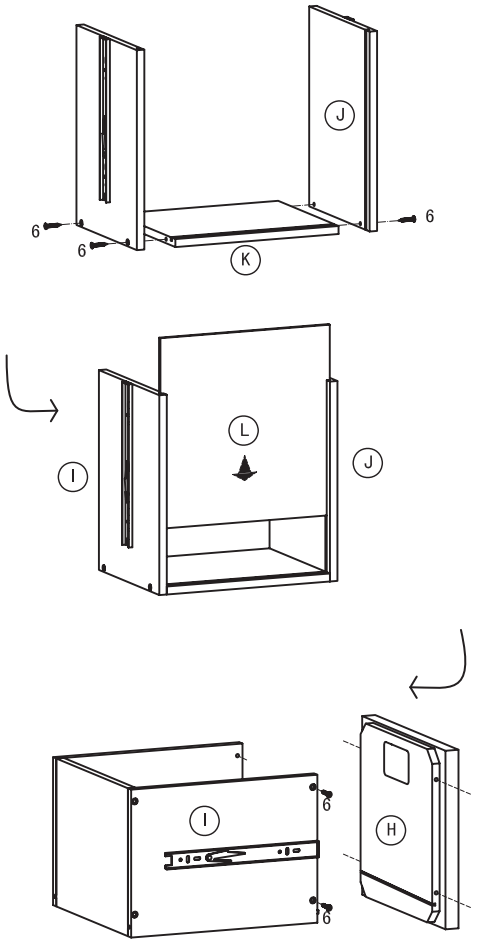

Step 7

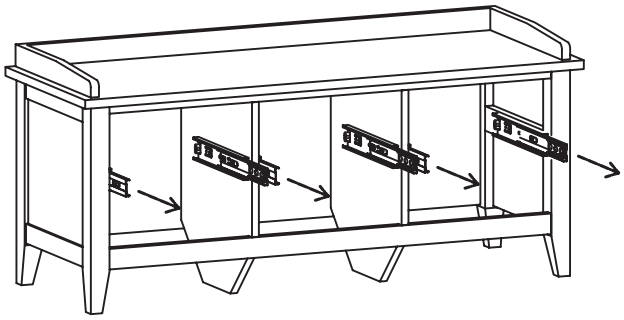

Slide out the side panel drawer glides for proper insertion of the drawers.

Step 8

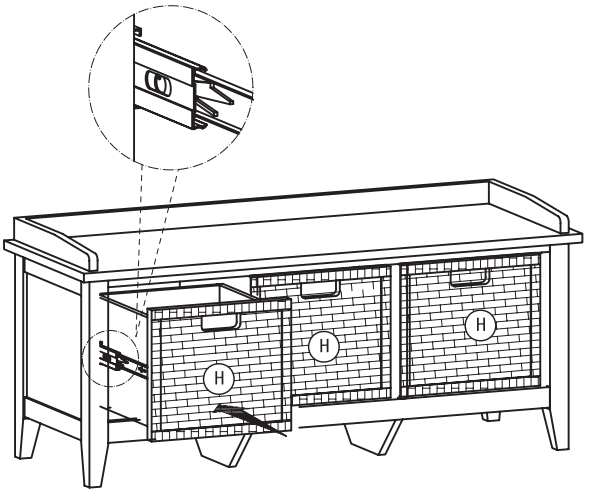

Line up the drawer glides on the drawers on both sides so that they enter evenly into the extended receiving side panel drawer glides as shown then gently push in the drawer until the drawer is secure and slides in and out smoothly.