Installation Collection

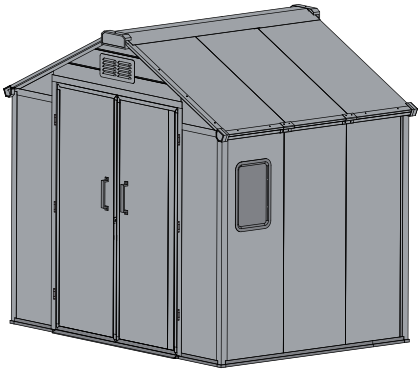

8X6 (1P - 44P)

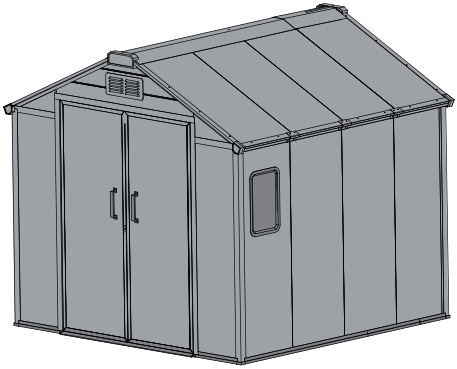

8X8 (45P - 98P)

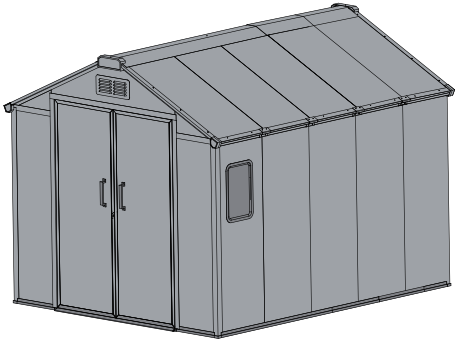

8X10 (45P - 98P)

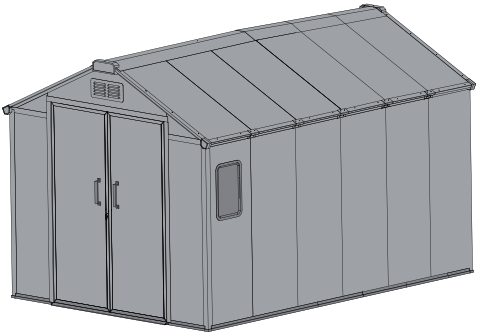

8X12 (45P - 98P)

List of Outer Box Accessories

Number: 325-A

NO.	Product Name:	PCS
B3	Floor I-beam (front)	1
B5	Floor threshold	1
B10	Left and right floor long buckle (front)	2
B12	Rear wall floor mid range	1
B13	Right door pillar	1
B14	Left door pillar	1
B15	Four corner pillar	4
A16	Front wall panel (left)	1
A17	Front wall panel (right)	1
B20	Door stall	1
A22	Left wall panel (front)	1
A23	Left middle rear/rear wall/right middle panel	7
A24	Front section of right wall panel	1
A25	Rear section of right wall panel	1
B28	Rear wall panel upper bracket (middle)	1
B29	Right front rainproof barrier strip	1
B30	Left front rainproof barrier strip	1
A43	Triangle board in the front wall	1
D55	Pillar	1
C56	Sunshine plate	1
A58	Door panel (left)	1
A59	Door panel (right)	1

Number: 325-B

NO.	Product Name:	PCS
A1	Floor (front left/front right)	2
A2	Floor (left center rear/right center rear)	4
B4	Floor I-beam (rear)	1
C6	Door pillar fixed foot (right)	1
C7	Door pillar fixed foot (left)	1
B8	Floor left and right partitions (front and rear walls)	4
C9	Four corner pillar foot	4
B11	Left and right floor short buckle (rear)	2
B18	Upper bracket of left front wall panel	1
B19	Upper right front wall panel	1
D21	Left and right corner codes on the door gear	2
B26	Rear wall panel upper bracket (right)	1
B27	Rear wall panel upper bracket (left)	1
B31	Right rear rainproof barrier strip	1
B32	Left rear rainproof barrier strip	1
D33	Upper four pillar corner code	4
D34	Herringbone fixed internal linking component	4
D35	Herringbone fixed external link	4
D36	Herringbone beam	4
D38	Renzi Liang Hengdan	2
D39	Top connecting component of herringbone beam	2
D40	Herringbone beam screw rod	2
A41	Front wall upper right triangular panel	1

List of Outer Box Accessories

Number: 325-B

NO.	Product Name:	PCS
A42	Front wall upper left triangular panel	1
A44	Left rear triangle	1
A45	Right rear triangle	1
A46	Rear wall triangular panel straight strip	1
A47	Left and right front cover plates on the roof	2
A48	Left, right, middle, and rear cover plates on the roof	4
B49	Roof panel long edge wrapping (front)	2
B50	Short edge wrapping of roof slab (rear)	2
B51	Front right rear left diagonal gear	2
B52	Front left rear right diagonal gear	2
C53	Front, right, rear, left decorative cover	2
C54	Front left rear right decorative cover	2
C57	Front and rear building covers	2
D60	Door handle/4 screws	2
D61	Outer door padlock seat	2
D62	Socket seat on the door sill	1
D63	Underdoor socket	1
D64	A-frame screws	25
D65	Cross shaped self powered screw	150
C66	Front triangular ventilation window	1+1
D67	Self-tapping screws	12
D68	Sharp tail self power	90
D69	T-shaped drill bit	1
D70	Bottom angle fixing piece	4
D90	Long ground nails	4
D91	Expansion screw	4
	Two pairs of gloves	

Number: 326

NO.	Product Name:	PCS
A71	Floor (left center rear/right center rear)	2
B72	Floor I-beam (medium)	1
B73	Left and right floor buckles (center)	2
A74	Left and right wall panels (center)	2
B75	Left and right rainproof barriers (center)	2
D76	Herringbone fixed internal linking component	2
D77	Herringbone fixed external link	2
D78	Herringbone beam	2
D80	Herringbone beam pole	1
D81	Top connecting component of herringbone beam	1
D82	Herringbone beam screw rod	1
A83	Left, right, middle, and rear cover plates on the roof	2
B84	Left and right center edge of roof panel	2
D85	Pillar Link Rod	1
C86	Short Sunshine Board (Rear)	1
D87	Hexagonal socket of herringbone screw	12
D88	Cross shaped automatic screw package	50
D89	Sharp tail self power	15

Tools needed for installation:

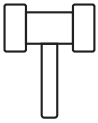

Cork Hammer x 1

Electric Drill x 1

Ladder x 1

Screw Driver x 1

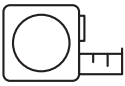

Tape Measure x 1

Small wrench x 1

Allen key x 1

Note:
Due to the ductility of the resin, there are no pre-drilled holes on the panel, so please drill your own holes.

Due to the large size of the product and for Safety, we recommend 2-4 people to work together on the installation, which is expected to be completed in 2-4 hours.

TOOL ROOM

Outer box number

325-A (X1)
325-B (X1)

8X6

FLOOR PARTS

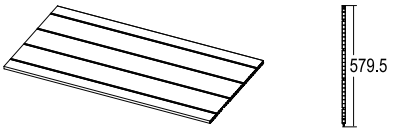

A1 (X2)

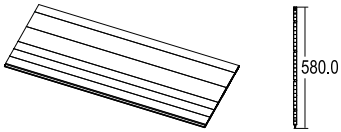

A2 (X4)

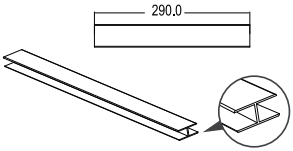

B3 (X1)

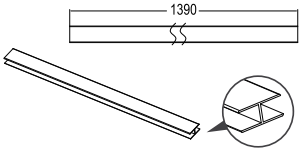

B4 (X1)

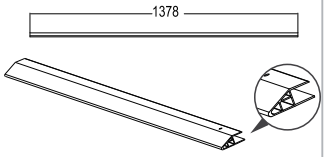

B5 (X1)

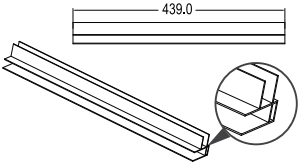

B8 (X4)

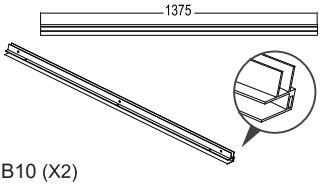

B10 (X2)

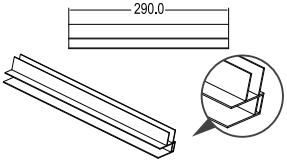

B11 (X2)

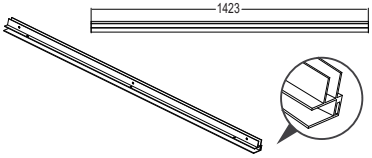

B12 (X1)

WALL PARTS

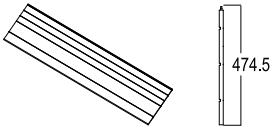

A16 (X1)

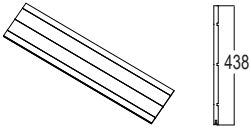

A17 (X1)

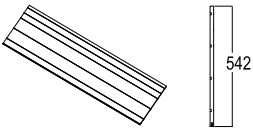

A22 (X1)

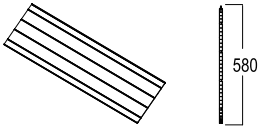

A23 (X7)

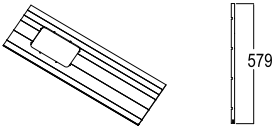

A24 (X1)

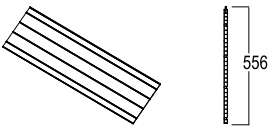

A25 (X1)

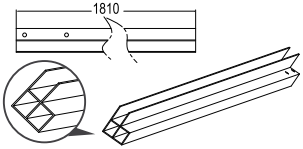

B13 (X1)

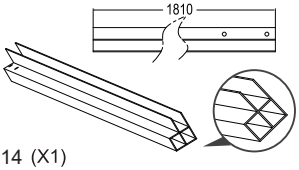

B14 (X1)

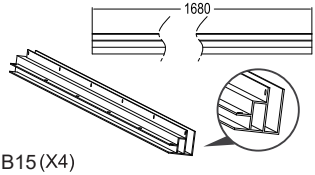

B15 (X4)

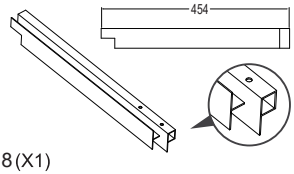

B18 (X1)

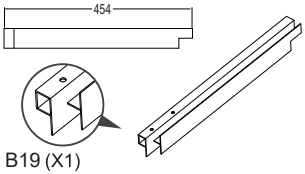

B19 (X1)

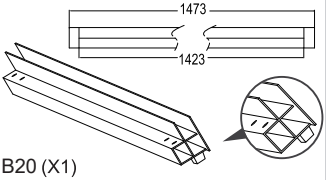

B20 (X1)

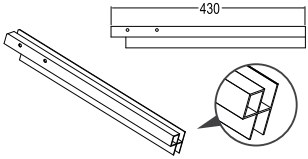

B26 (X1)

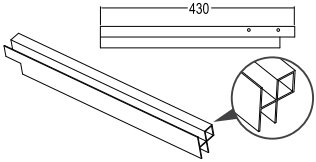

B27 (X1)

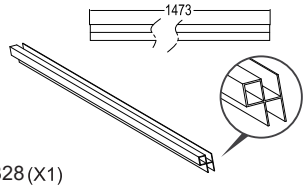

B28 (X1)

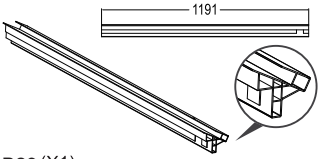

B29 (X1)

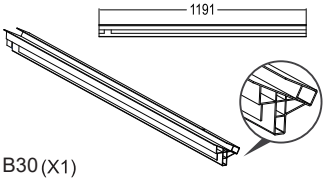

B30 (X1)

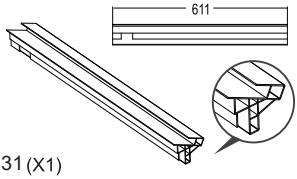

B31 (X1)

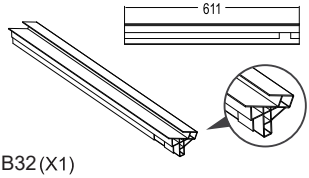

B32 (X1)

ROOF PARTS

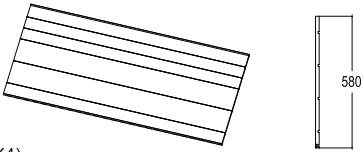

A48 (X4)

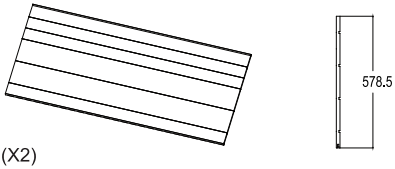

A47 (X2)

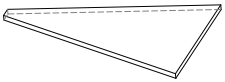

A42 (X1)

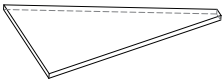

A41 (X1)

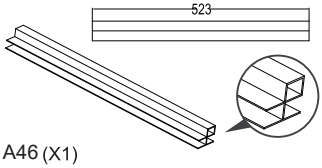

A46 (X1)

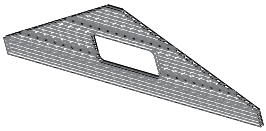

A43 (X1)

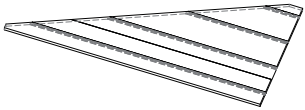

A44 (X1)

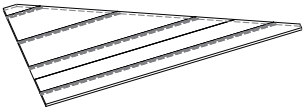

A45 (X1)

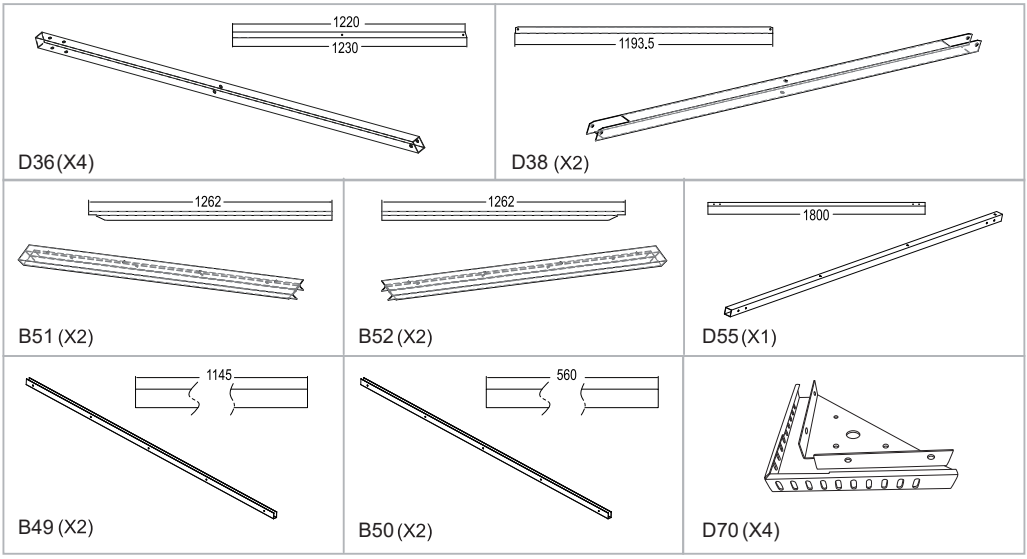

ROOF PARTS

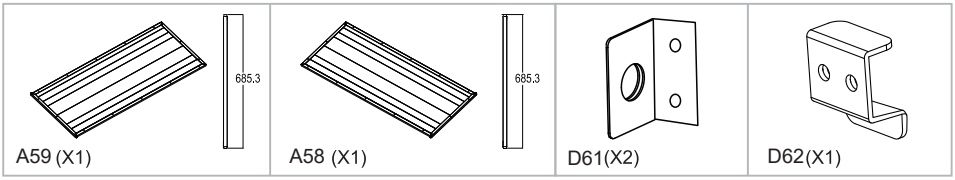

SMALL PARTS

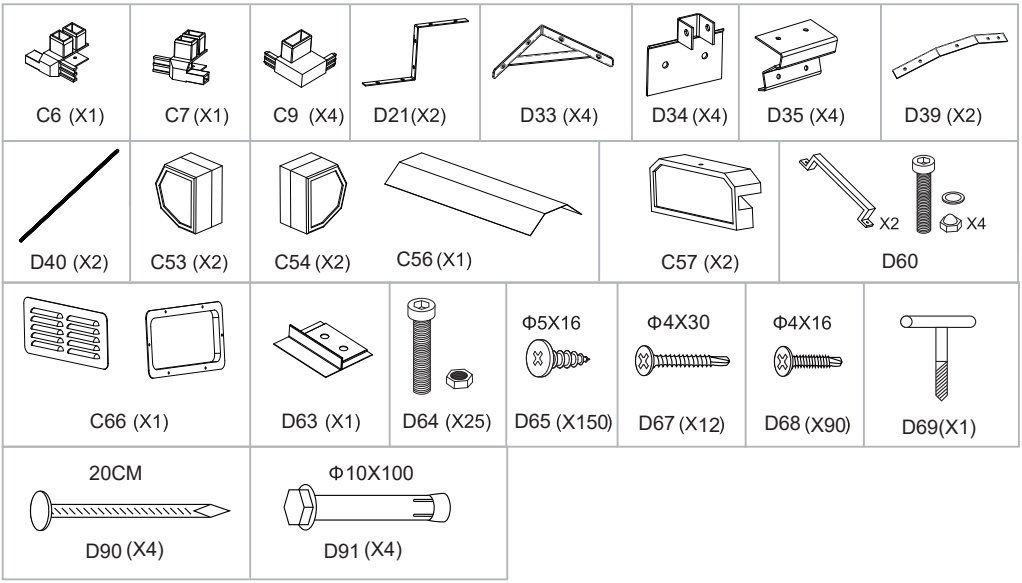

1

A1 (x1) A2 (x2)

Cork Hammer

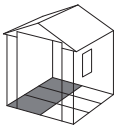

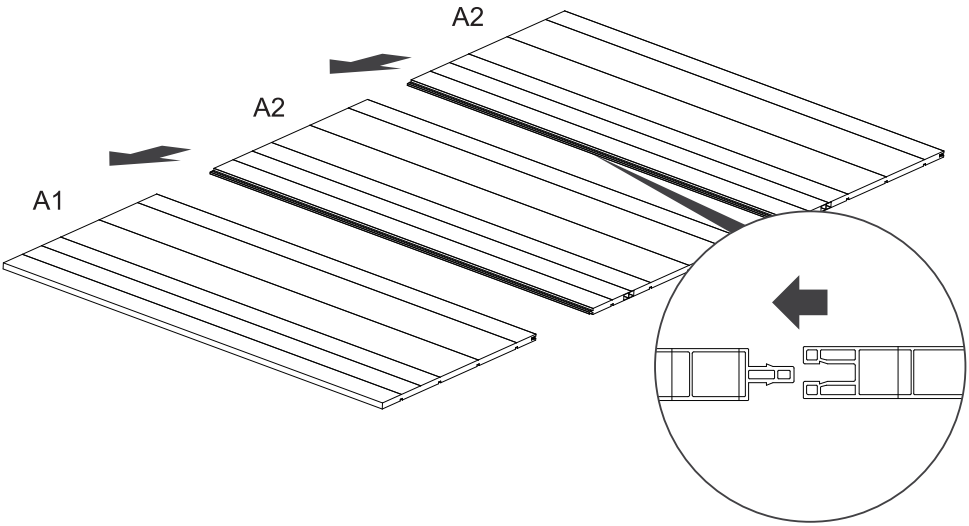

2

B3 (X1) B4 (X1)

Cork Hammer

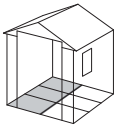

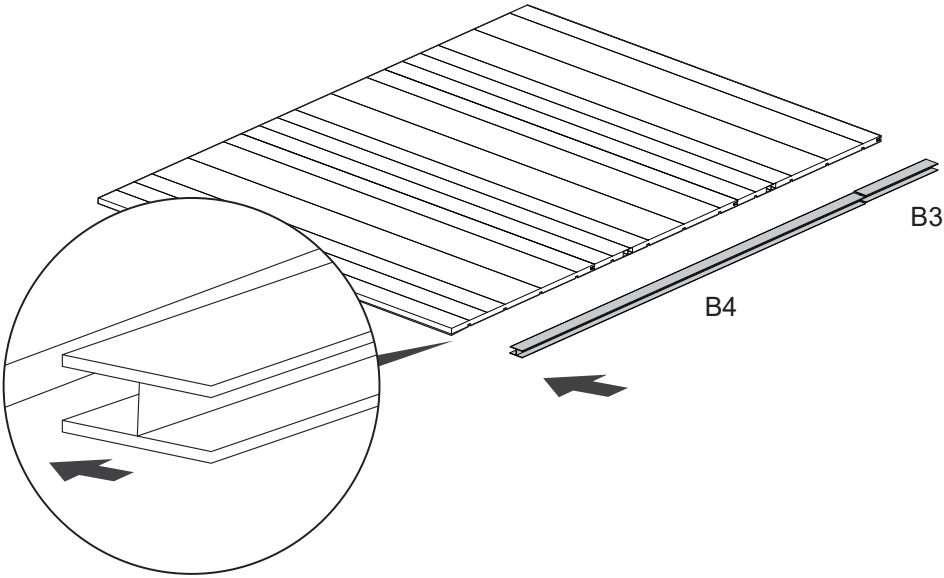

3

A1 (x1) A2 (x2)

Cork Hammer

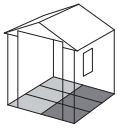

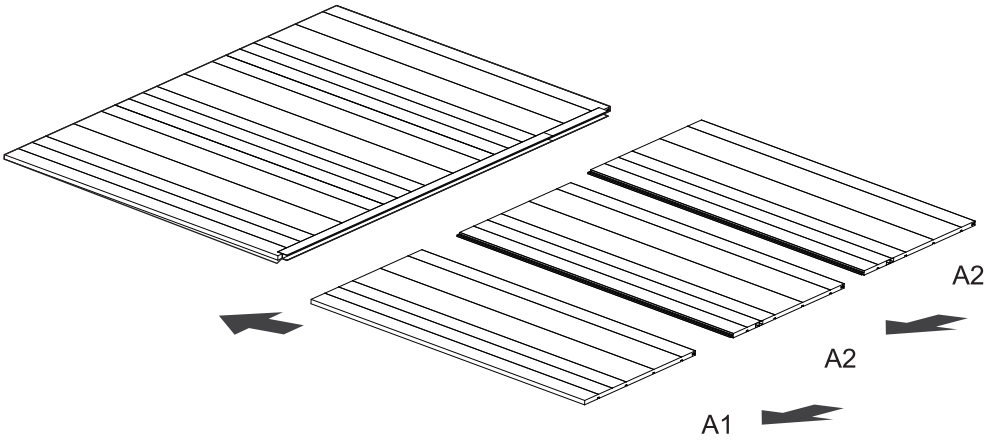

4

Φ5X16
D65 (x12)

Electric Drill

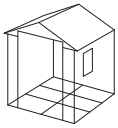

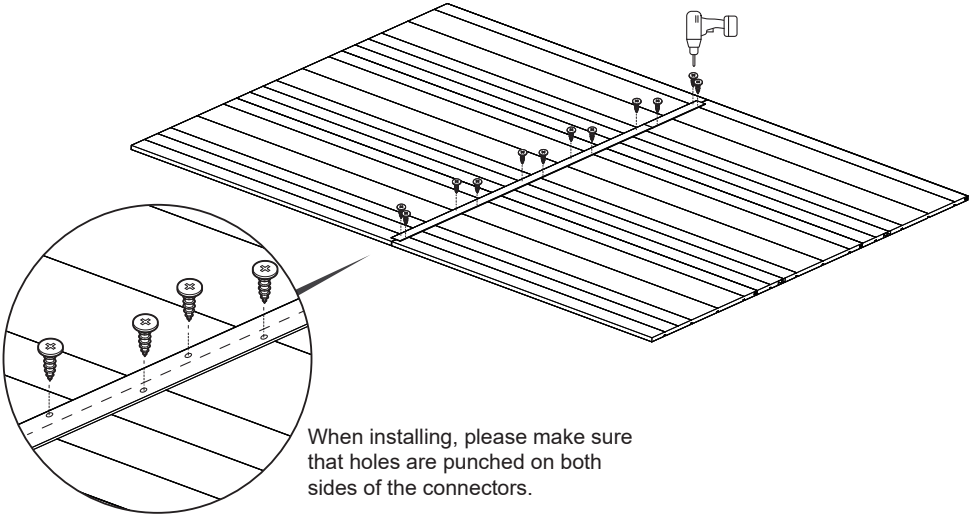

When installing, please make sure that holes are punched on both sides of the connectors.

5

C9 (x1)

Cork Hammer

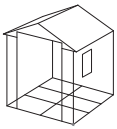

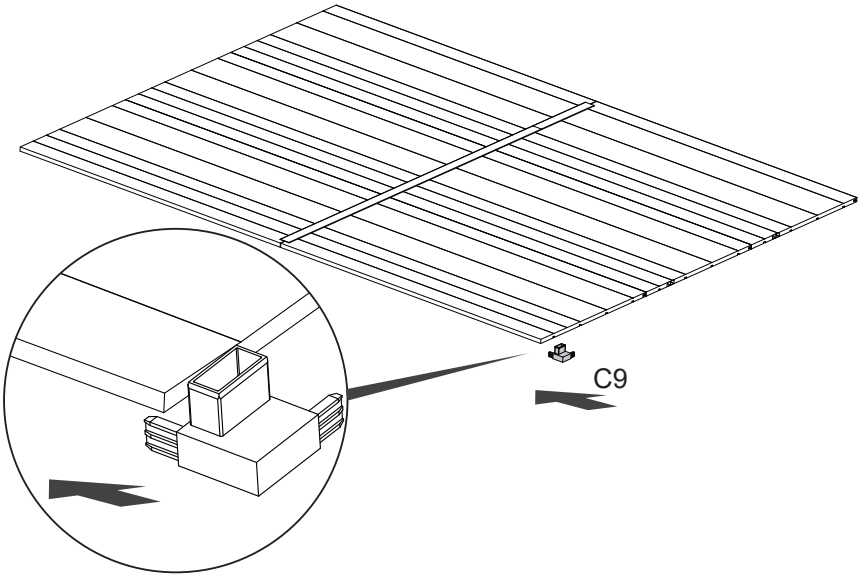

6

B8 (x1)

Cork Hammer

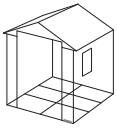

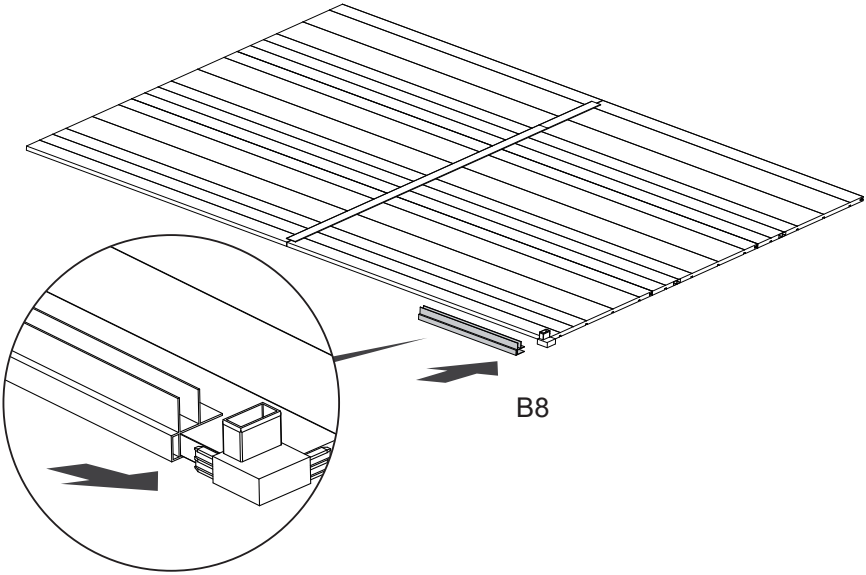

7

C6 (x1)

Cork Hammer

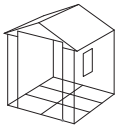

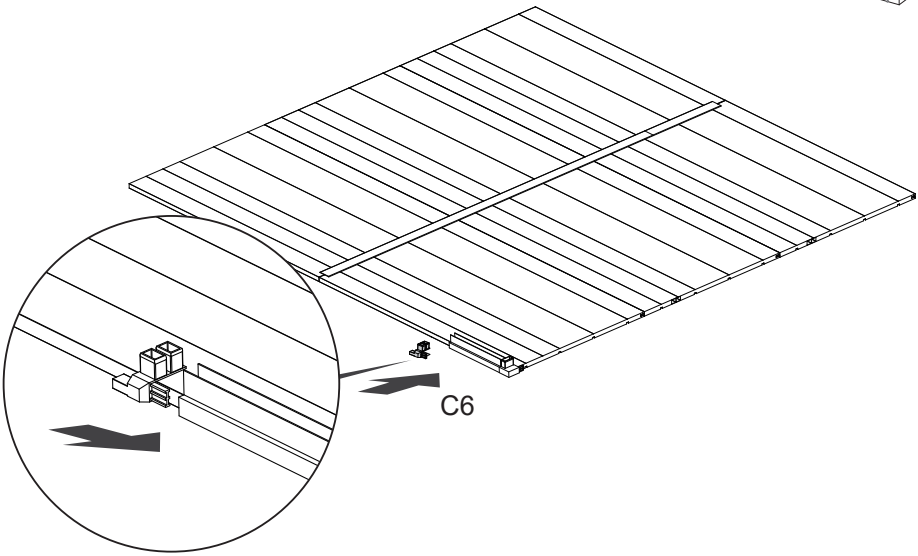

8

B5 (x1)

Cork Hammer

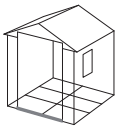

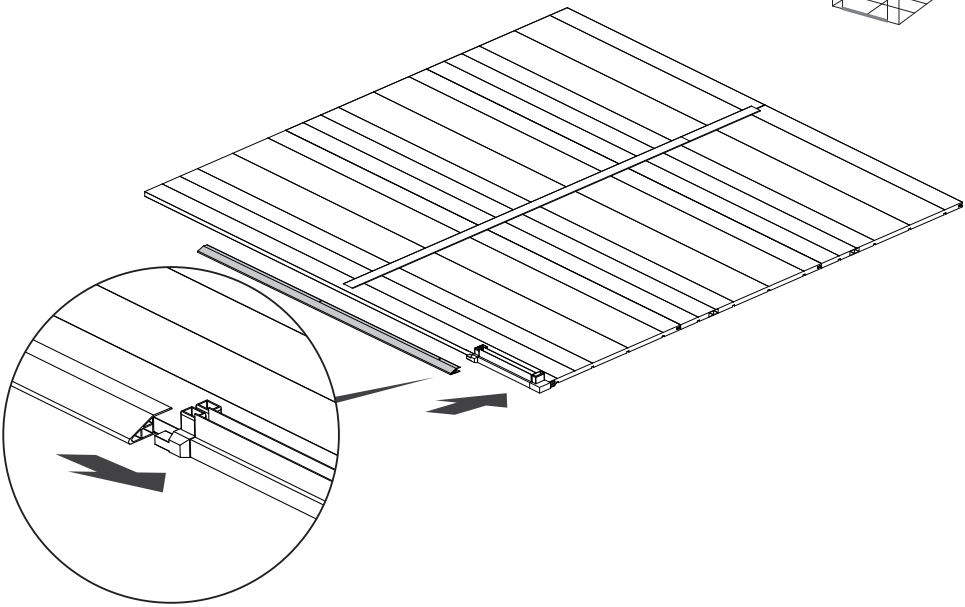

9

C7 (x1)

Cork Hammer

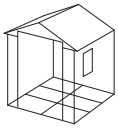

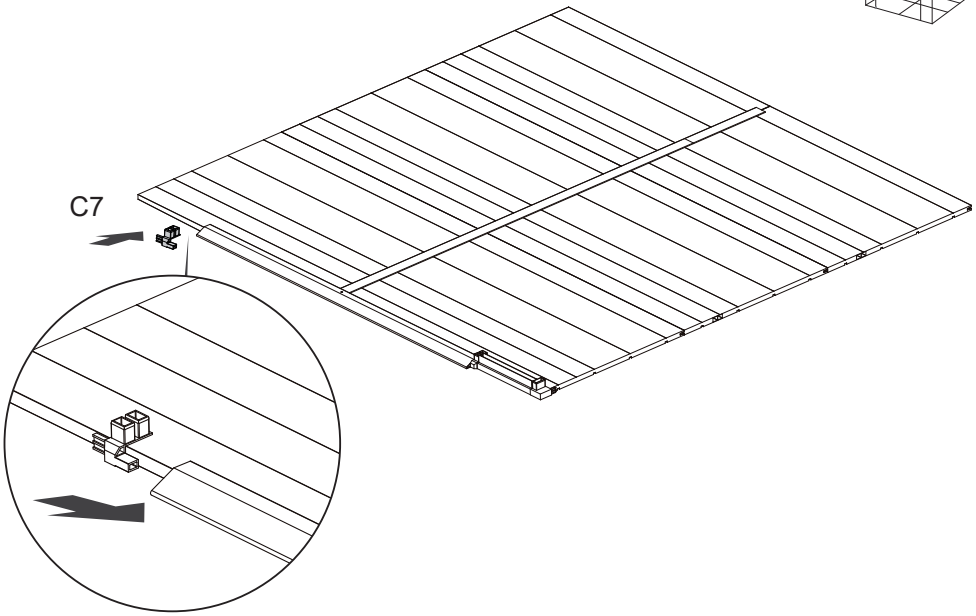

10

B8 (x1)

Cork Hammer

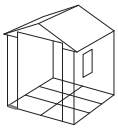

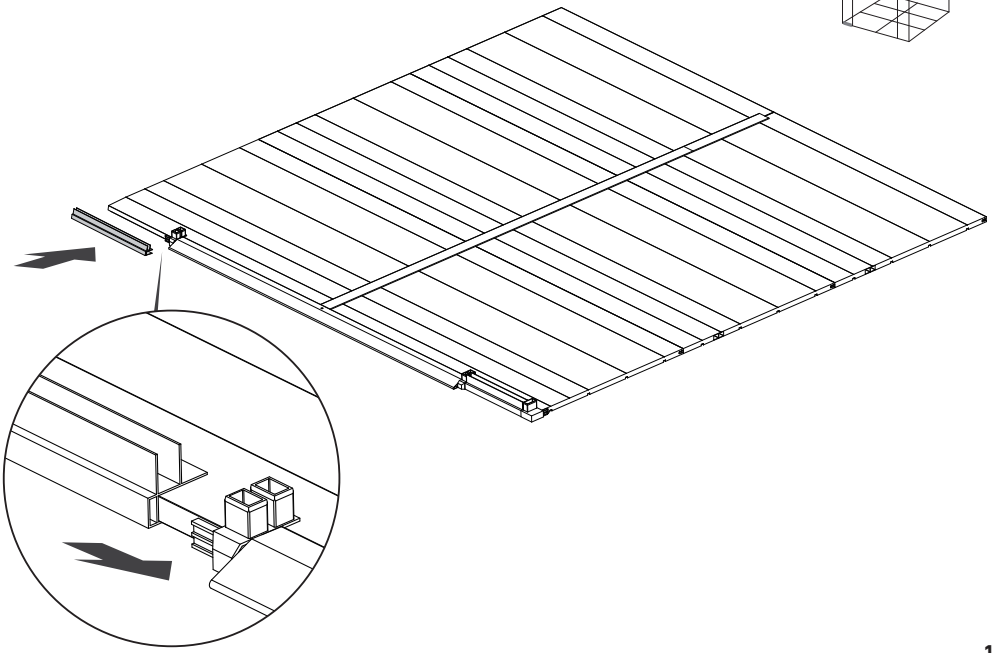

11

C9 (x1)

Cork Hammer

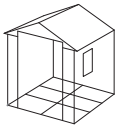

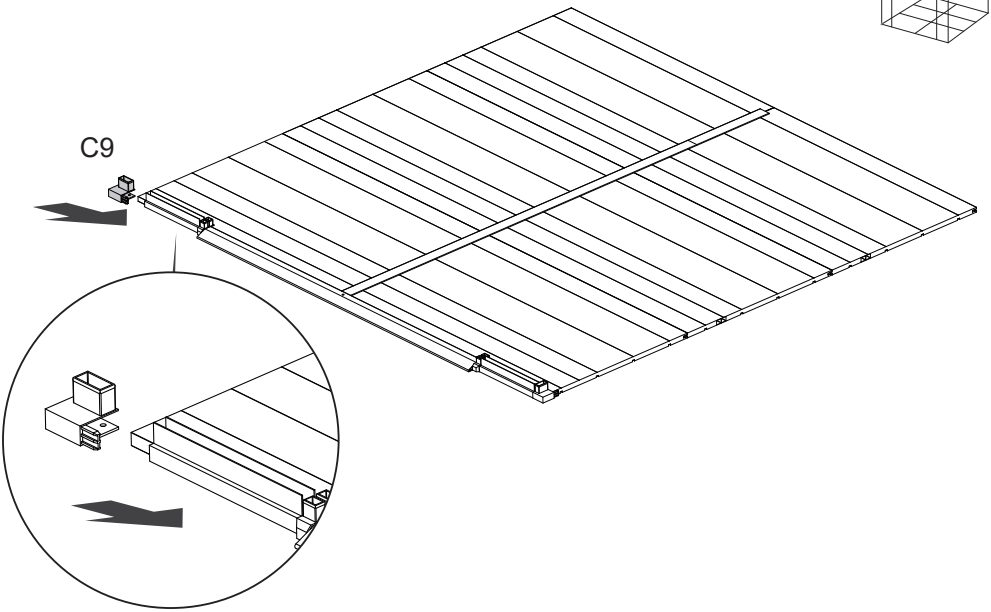

12

Φ5X16
D65 (x12)

Electric Drill

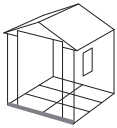

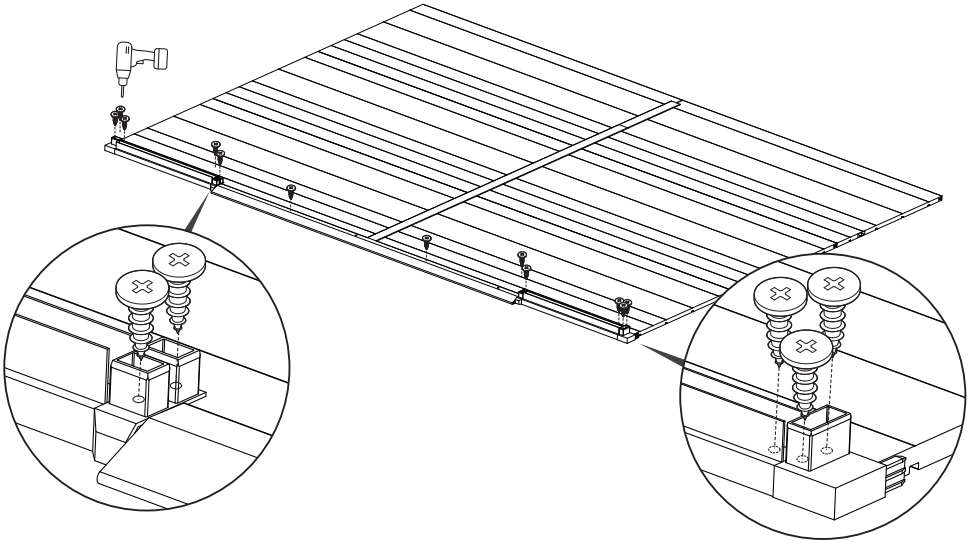

13

B10 (x2)

Cork Hammer

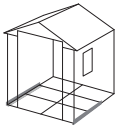

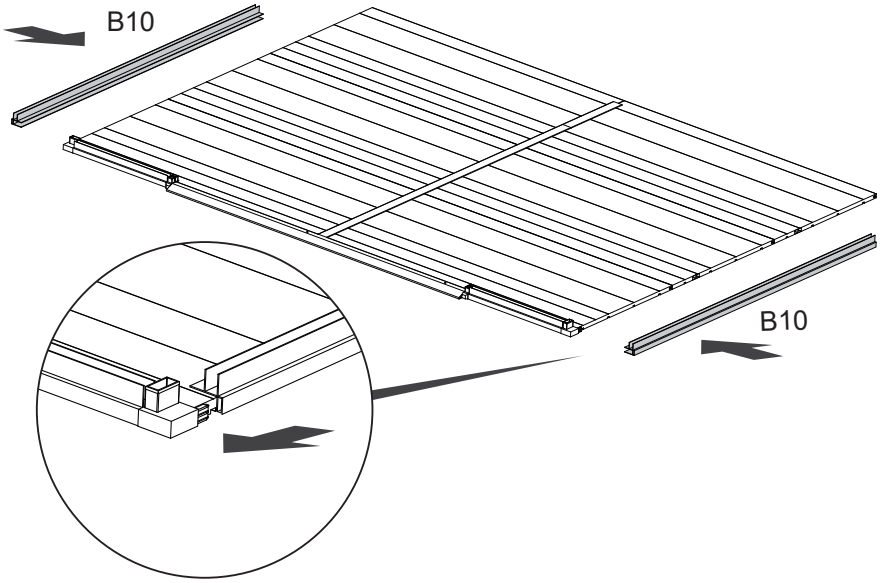

14

B11 (x2)

Cork Hammer

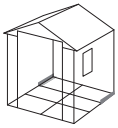

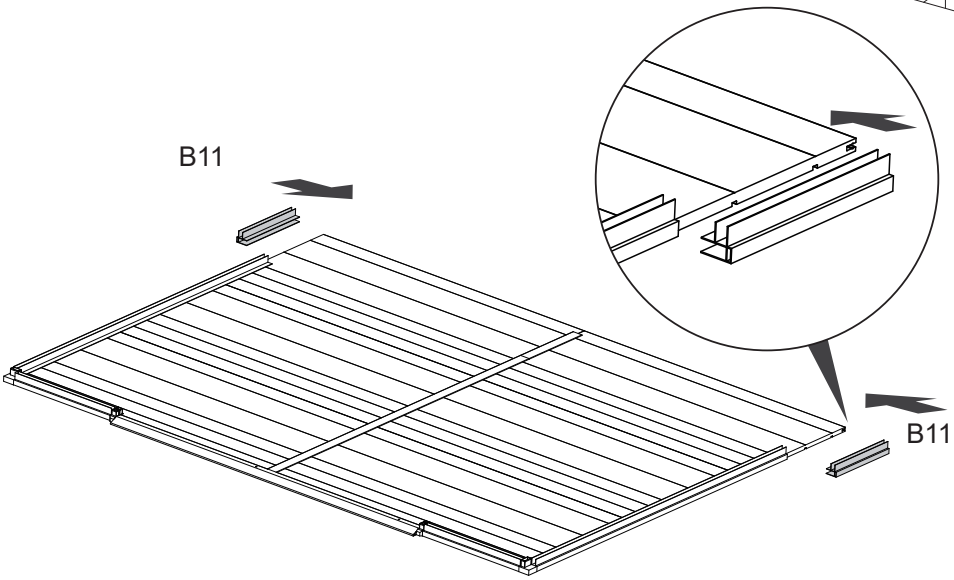

15

C9 (x2)

Cork Hammer

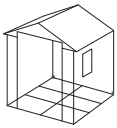

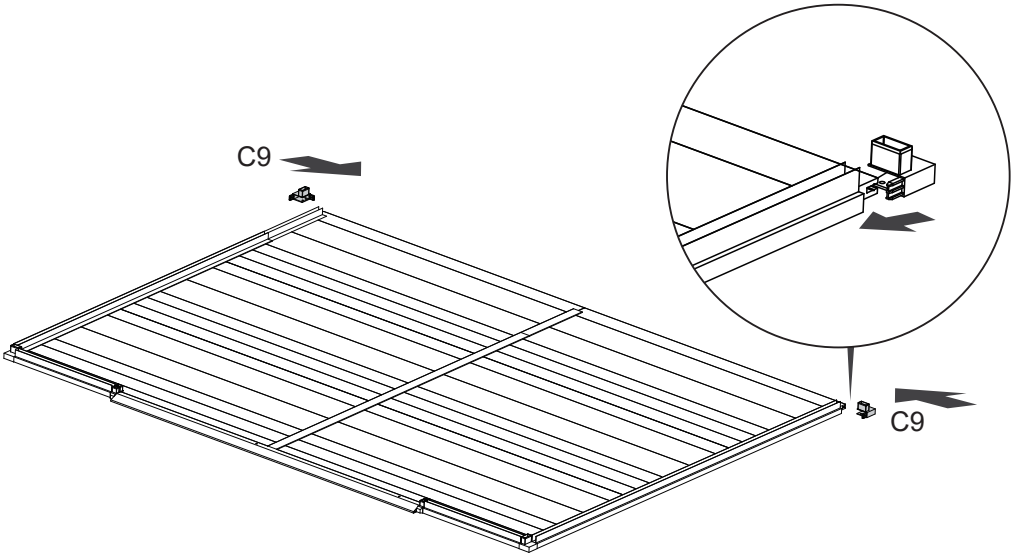

16

Φ5X16
D65 (x20)

Electric Drill

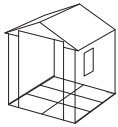

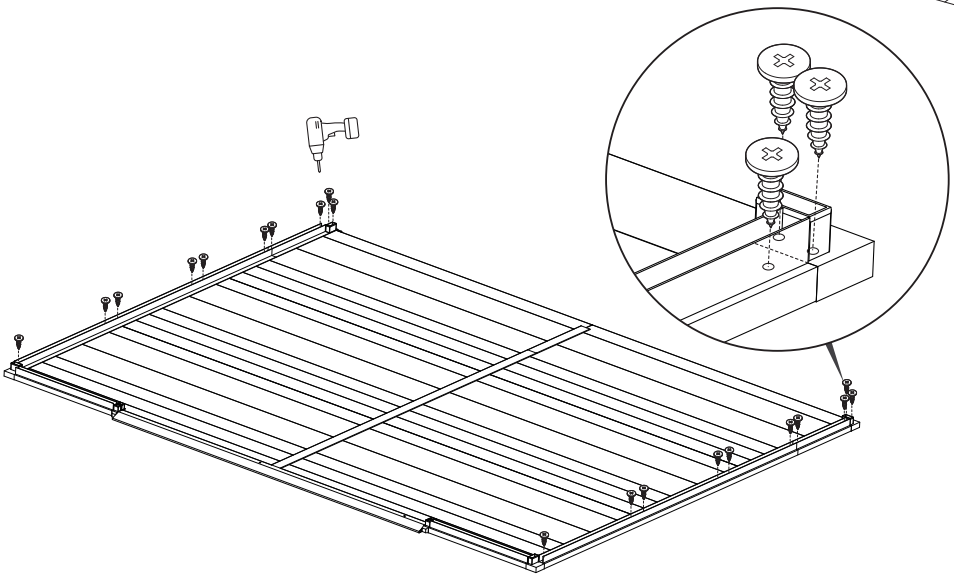

17

B8 (x2)

Cork Hammer

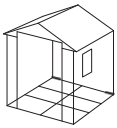

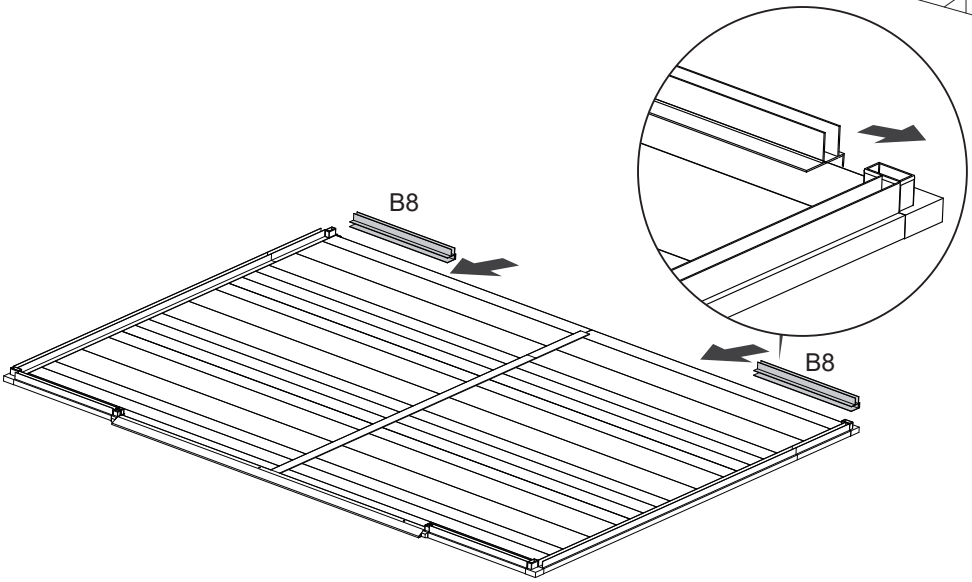

18

B12 (x1)

Cork Hammer

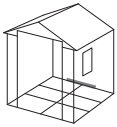

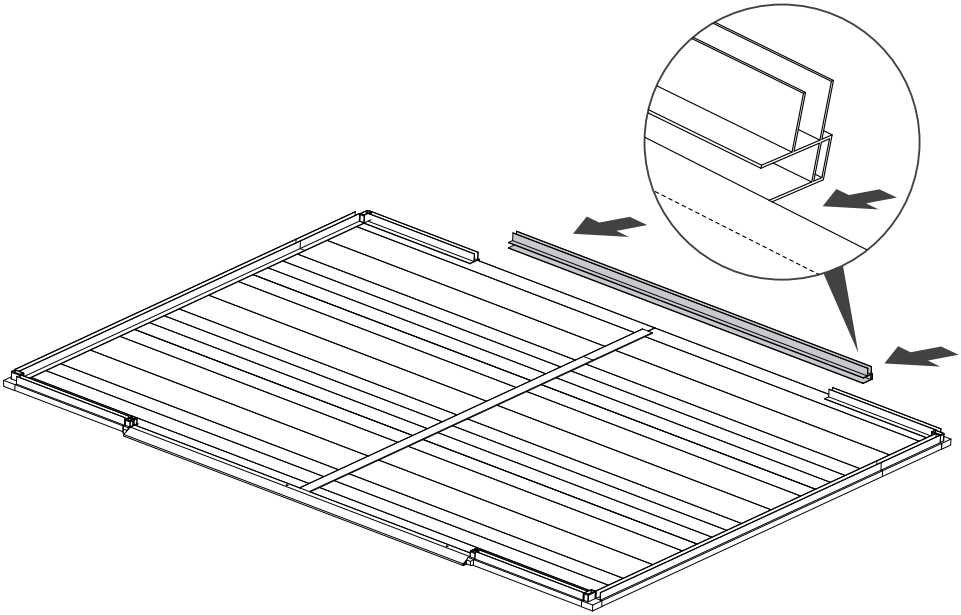

19

Φ5X16 D65 (x9)

Electric Drill

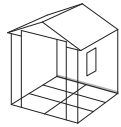

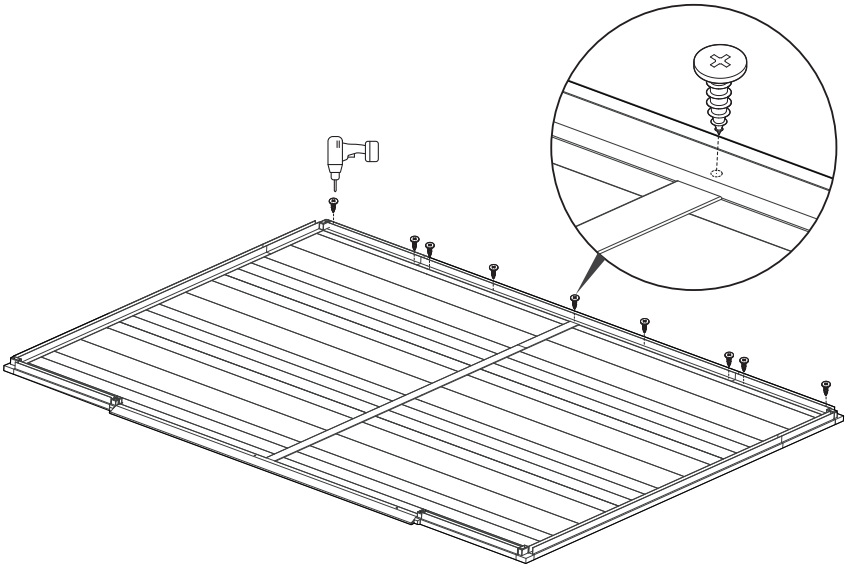

20

B13 (x1)

B14(x1)

Cork Hammer

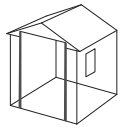

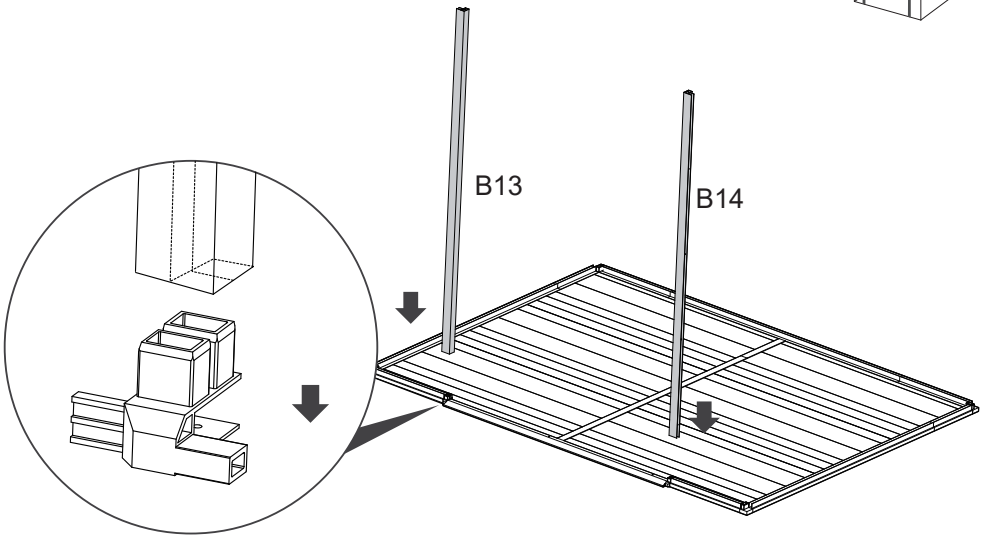

21


B20 (x1)


Cork Hammer


Tape Measure


Ladder

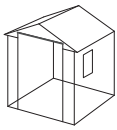

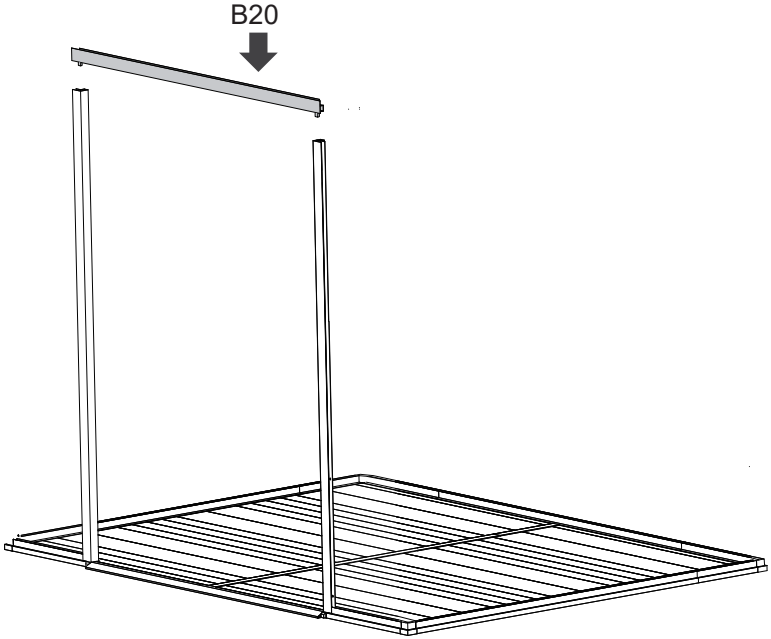

BE CAREFUL

The spacing between the bottom and top should be kept the same, with a spacing of 1378mm

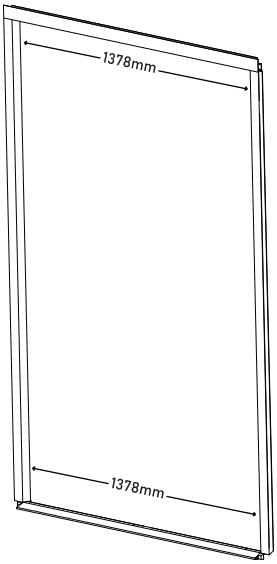

22

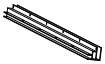

B15 (x2)

Cork Hammer

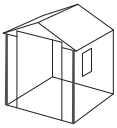

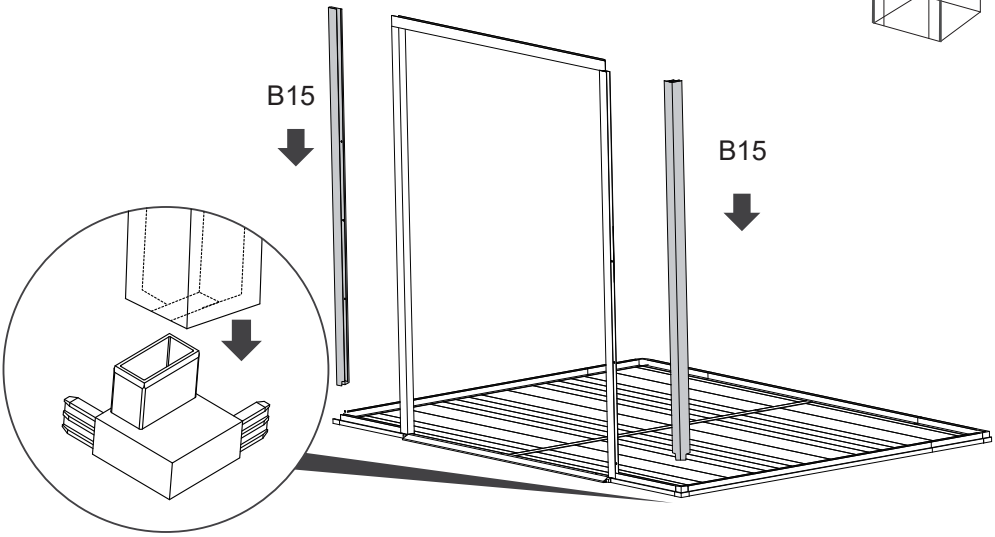

We recommend snap in the slot on the outside.

23

A16 (x1)

A17 (x1)

Cork Hammer

Tape measure

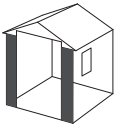

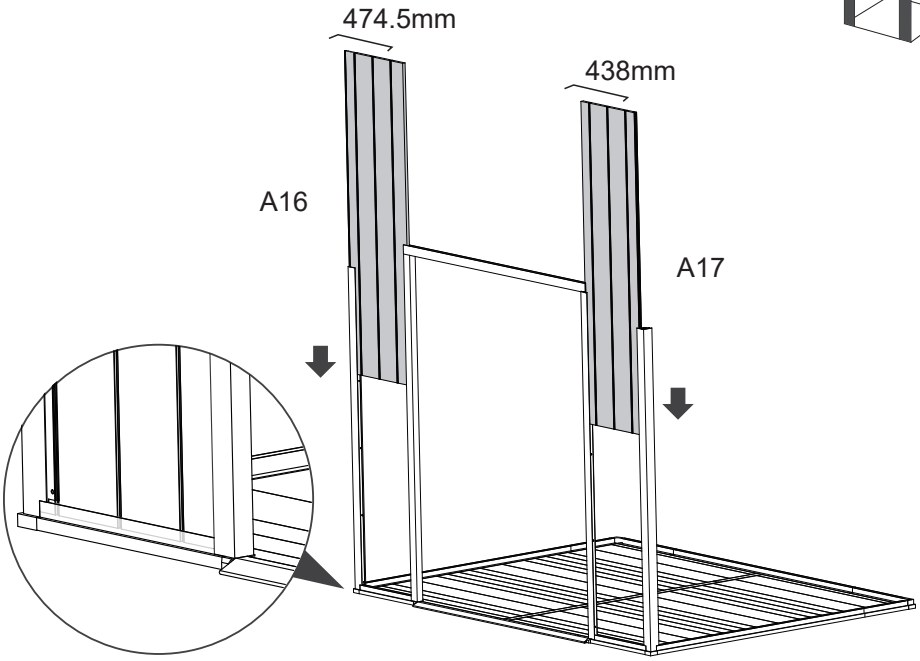

24

B18 (x1) B19 (x1) Cork Hammer

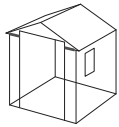

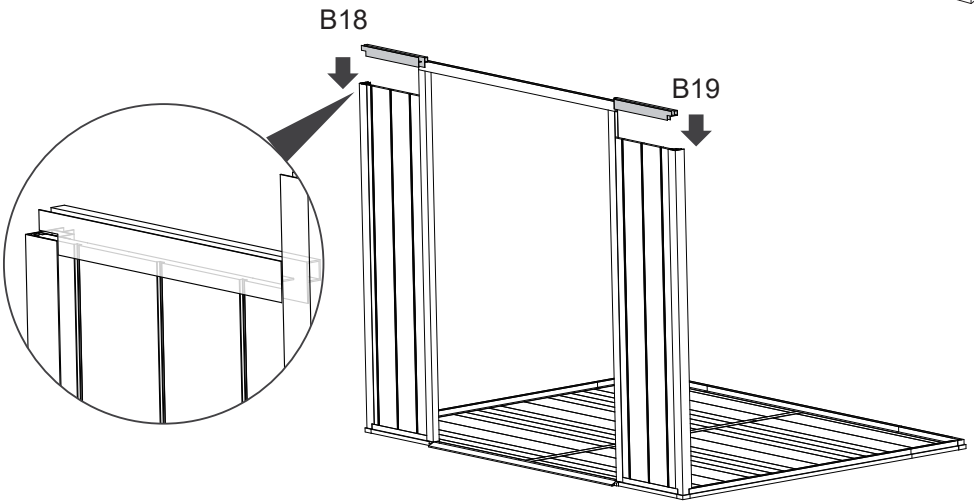

25

D21 (x2) Φ4X16 D68 (x12) Electric Drill

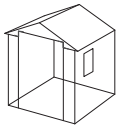

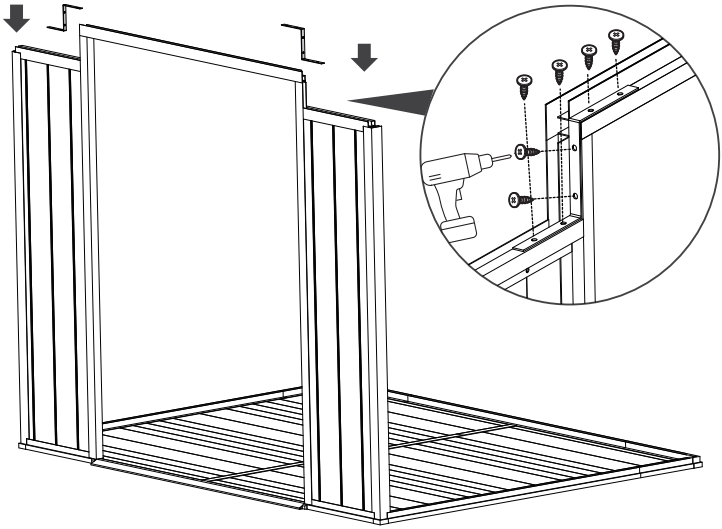

26

A22 (x1) A23(x2) B15 (x1) Cork Hammer

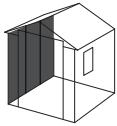

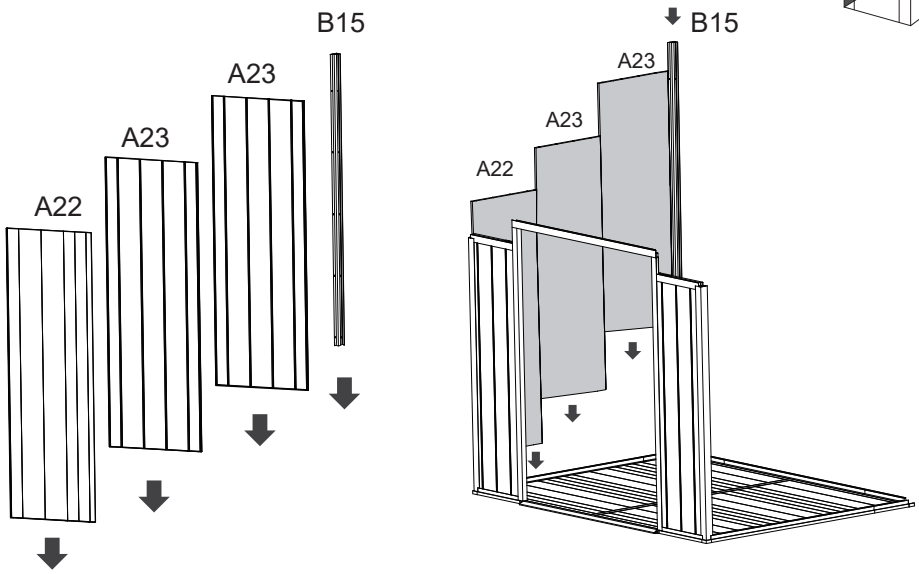

27

Φ5X16
D65 (x12)

Electric Drill

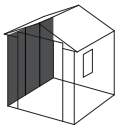

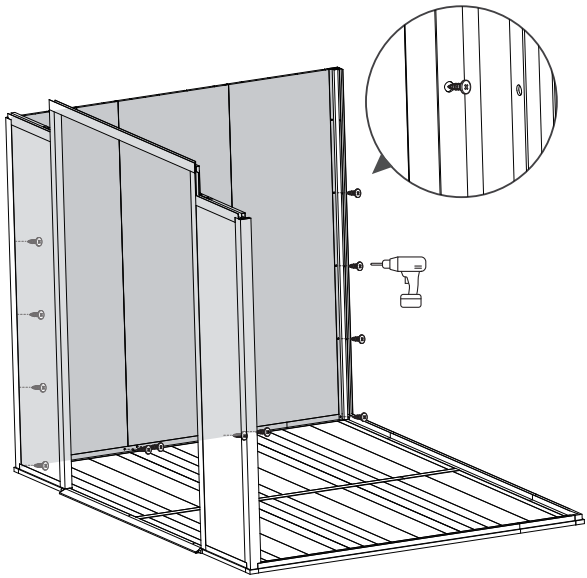

28


A23 (x4)

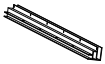
B15 (x1)


Cork Hammer

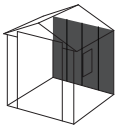

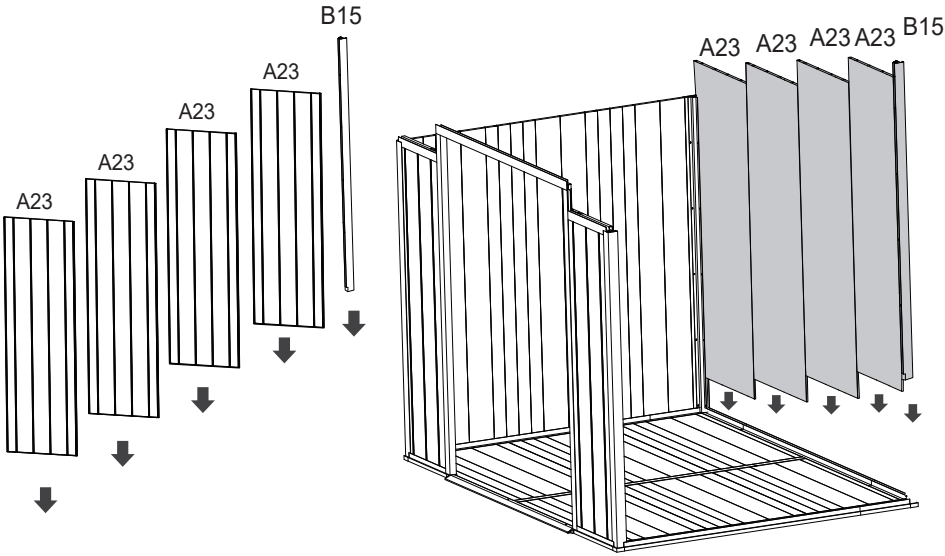

29


Φ5X16
D65 (x14)


Electric Drill

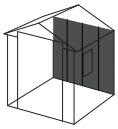

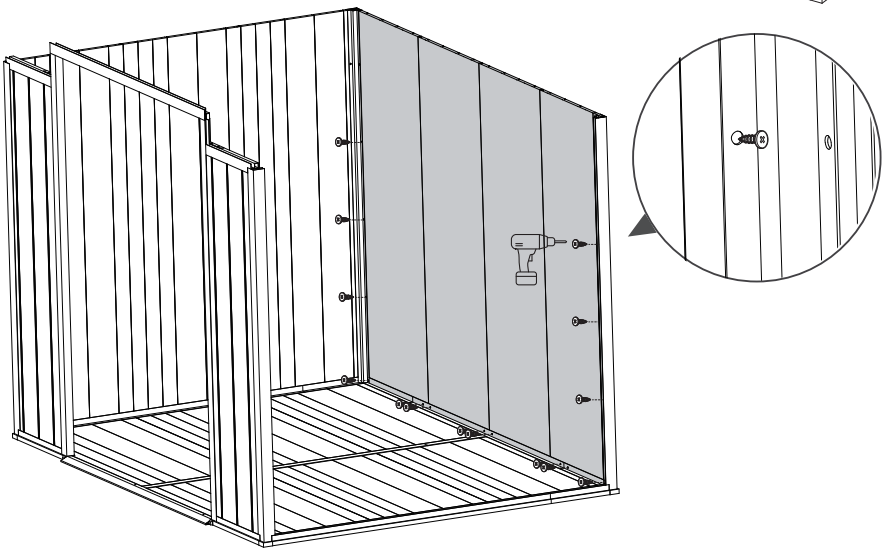

30

A24(x1) A23(x1) A25(x1) Cork Hammer

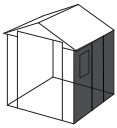

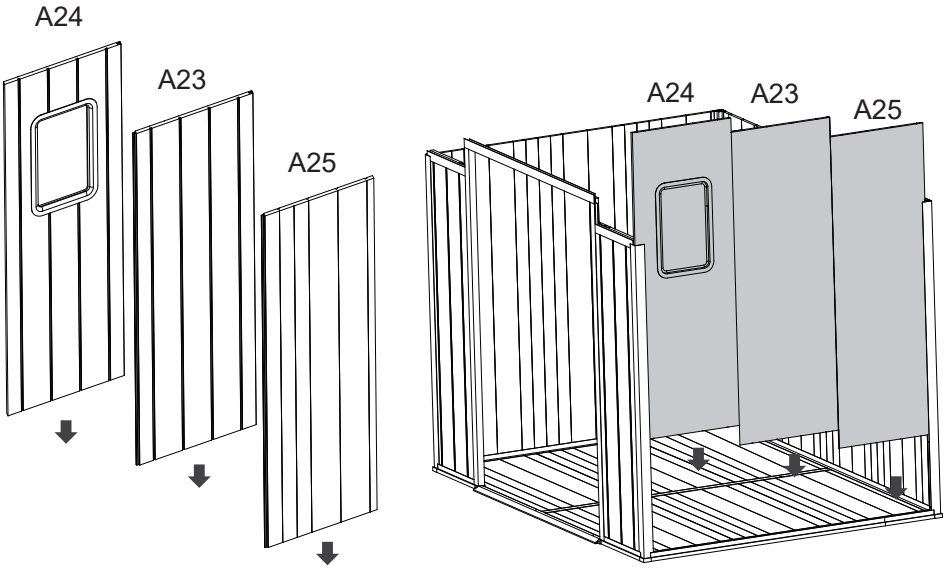

31

Φ5X16 D65 (x12) Electric Drill

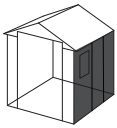

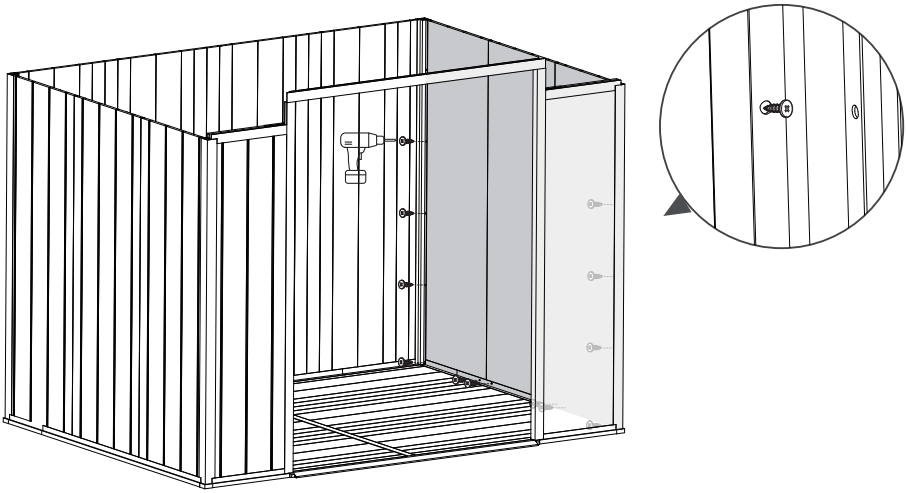

32

B26 (x1) B27 (x1) B28 (x1) Ladder

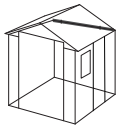

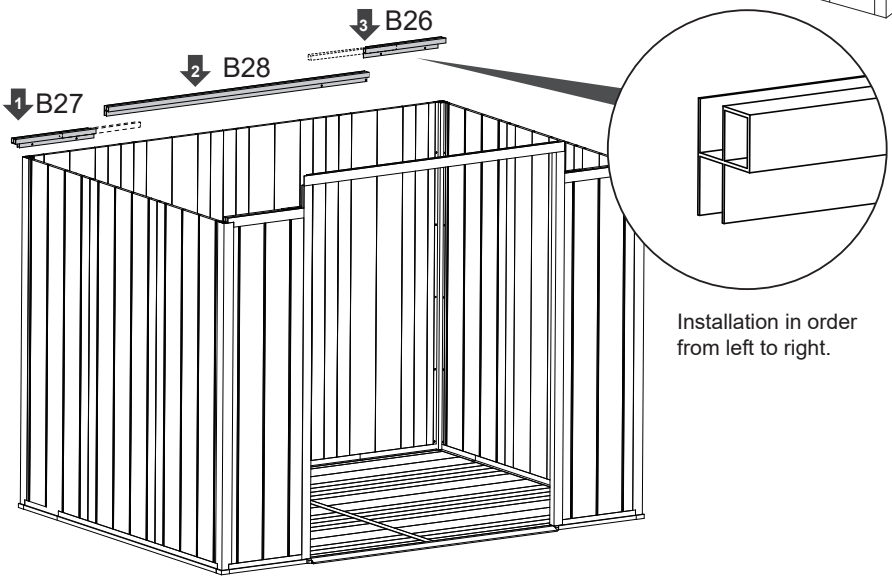

Installation in order from left to right.

33

Φ4X16 D68(x6) Electric Drill Ladder

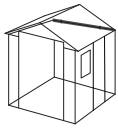

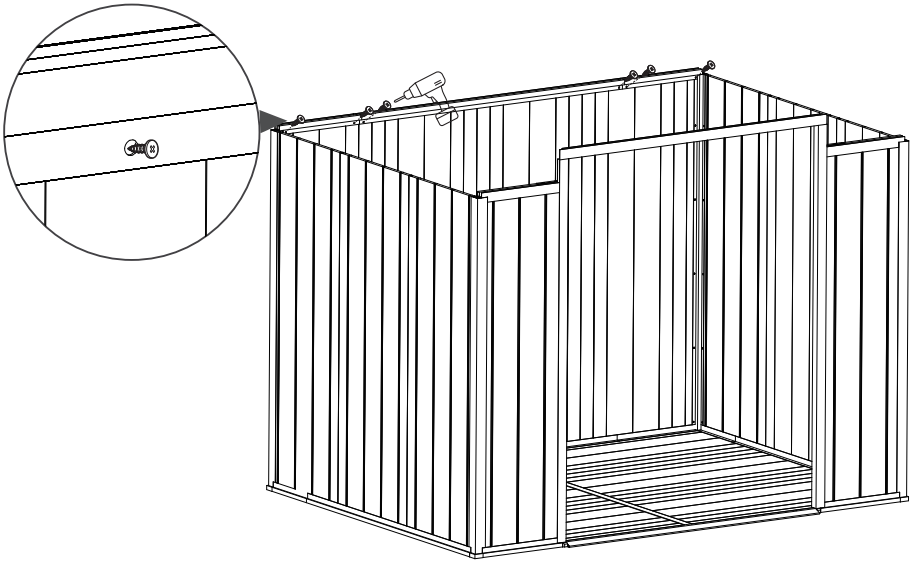

34

B29(x1) B31(x1) Cork Hammer Ladder

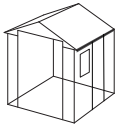

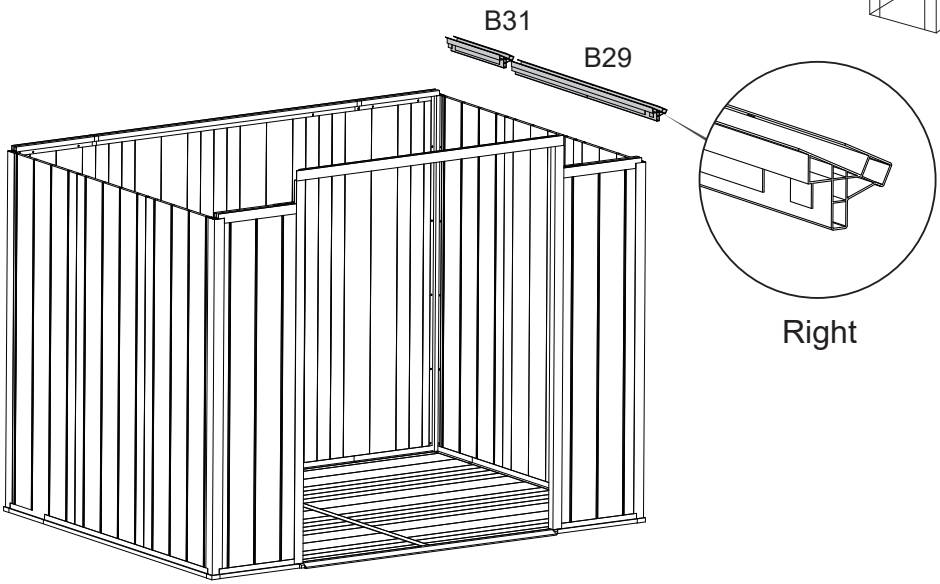

35

B30 (x1) B32(x1) Cork Hammer Ladder

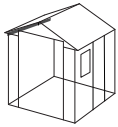

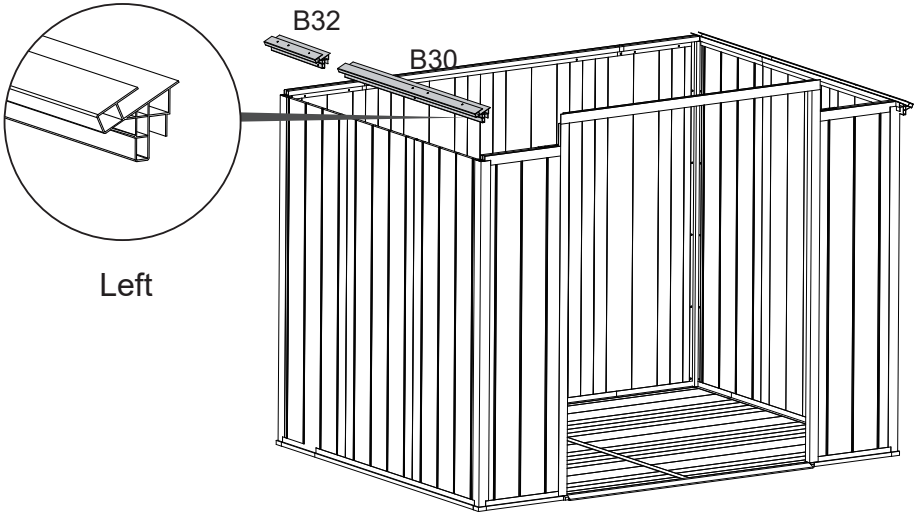

36

D33 (x4)

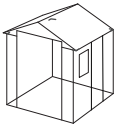

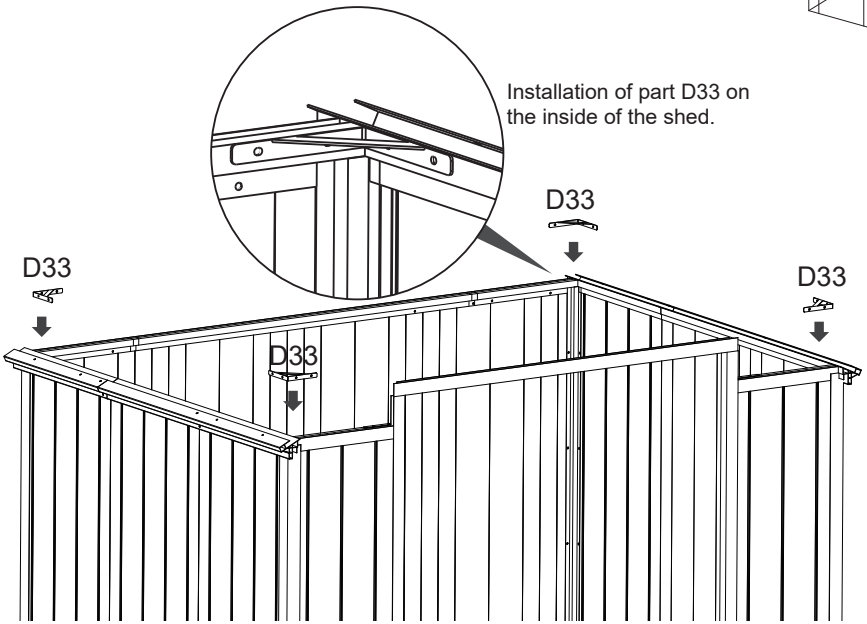

37

Φ4X16
D68(x12)

Electric Drill

Ladder

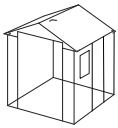

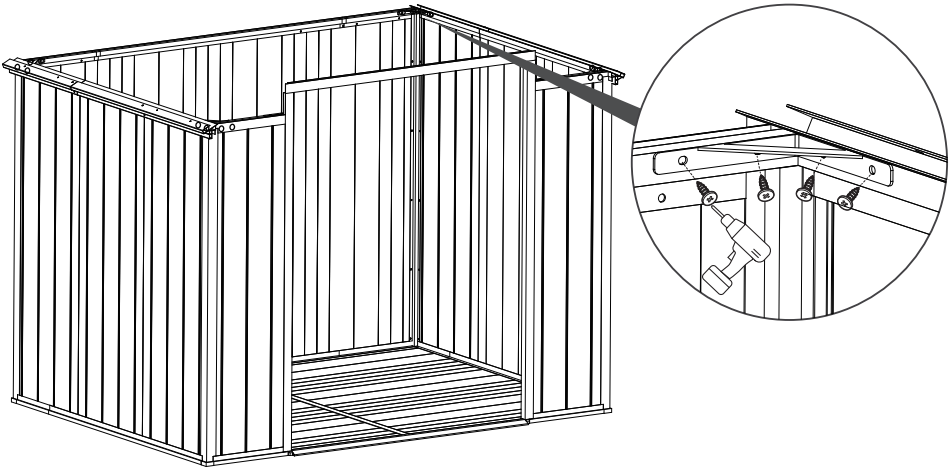

38

D34 (x4) D35(x4) D69(X1) Ladder

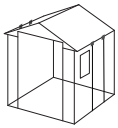

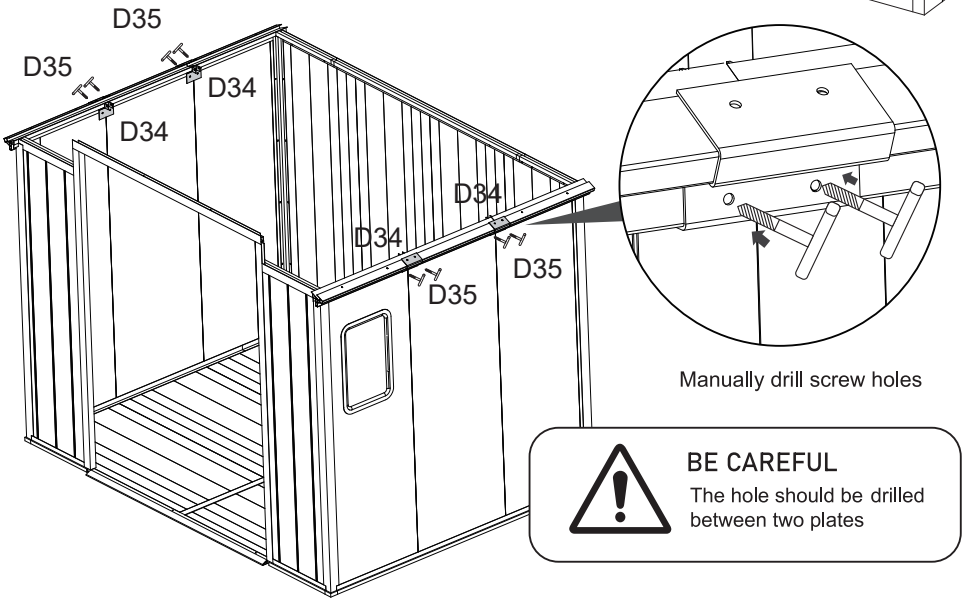

BE CAREFUL

The hole should be drilled between two plates

39

D64 (x8) Ladder Small Wrench Allen key

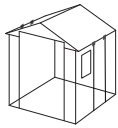

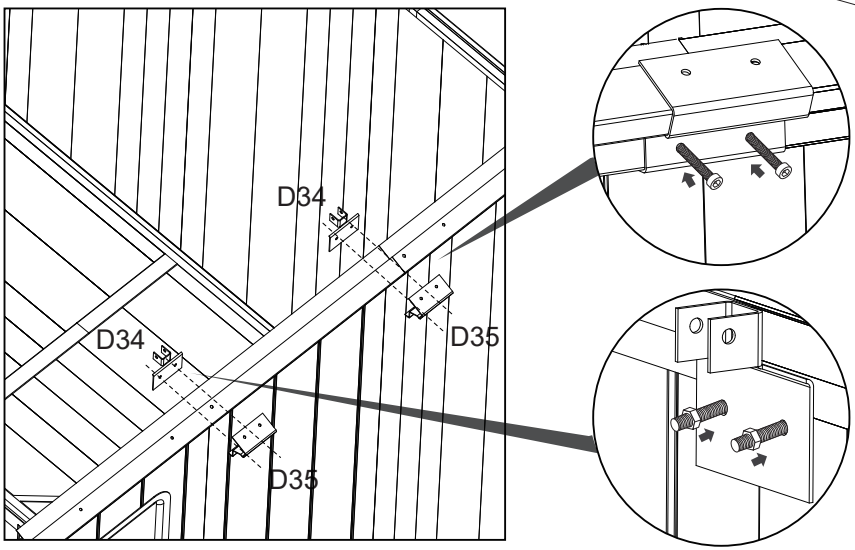

Parts D34 and D35 need to be aligned, they use the same screw.

40


D36 (x2)

D39 (x2)

D64 (x8)

Small Wrench

Allen key

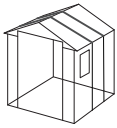

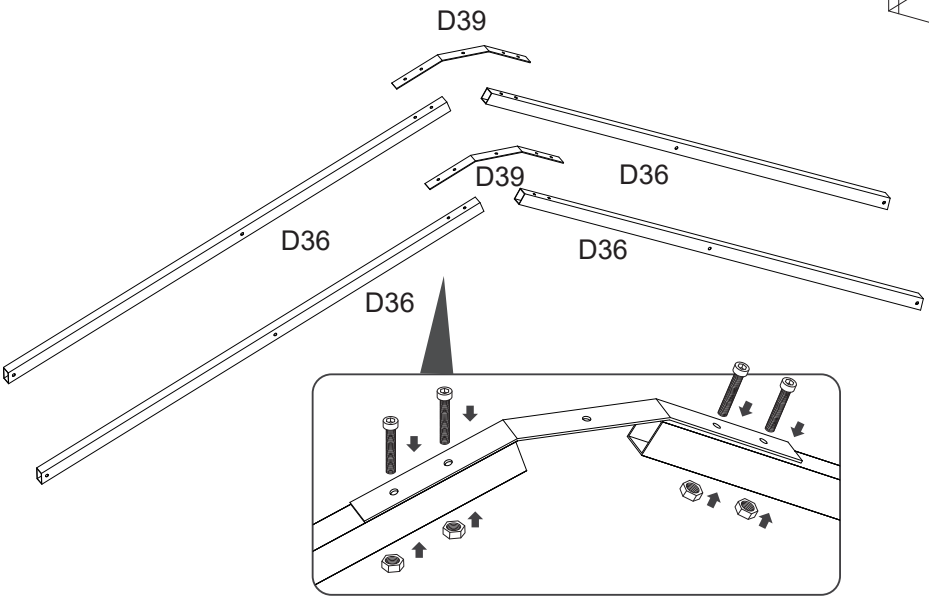

41


D38 (x2)

D64 (x4)

Small Wrench

Allen key

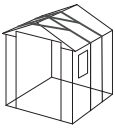

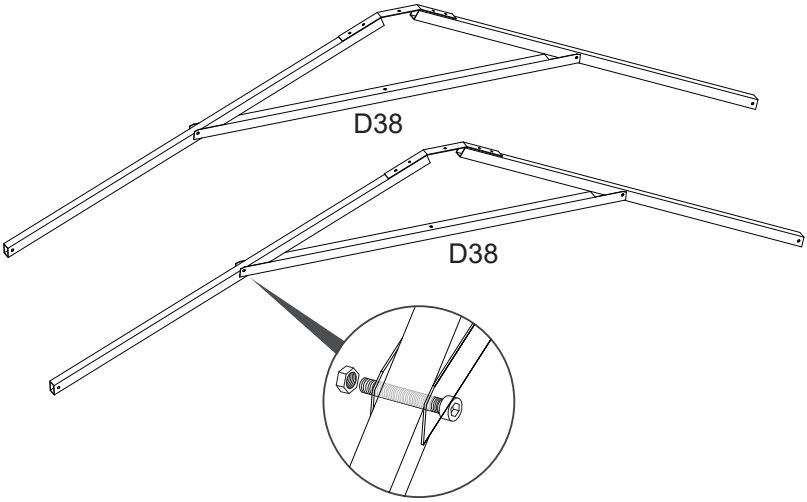

42

D64(x4) Small Wrench Allen key Ladder

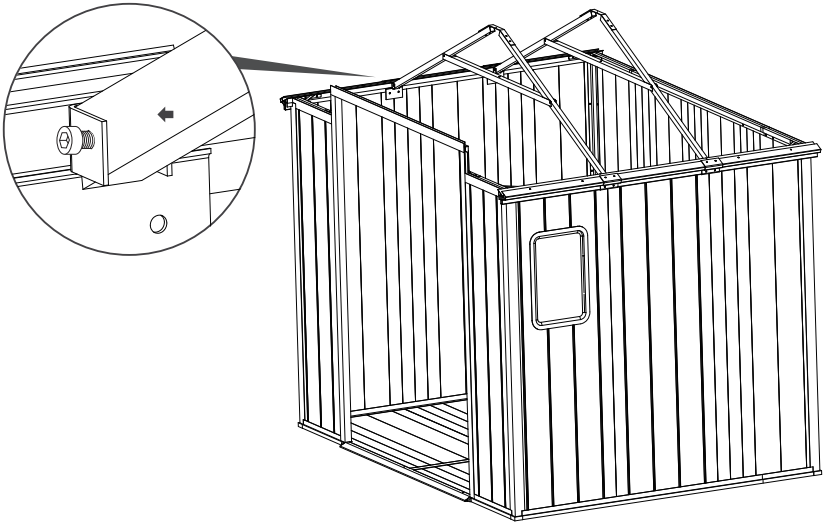

43

A44 (x1) A45 (x1) Ladder

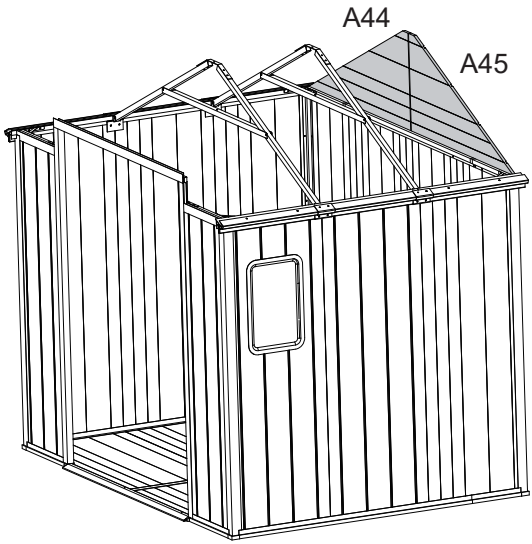

44

A46 (x1)

Cork Hammer

Ladder

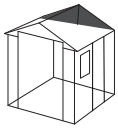

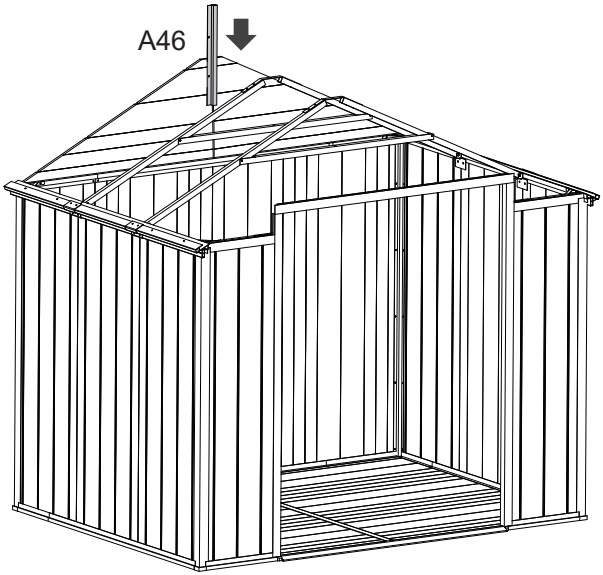

45

Φ5X16
D65 (x2)

Electric Drill

Ladder

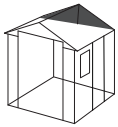

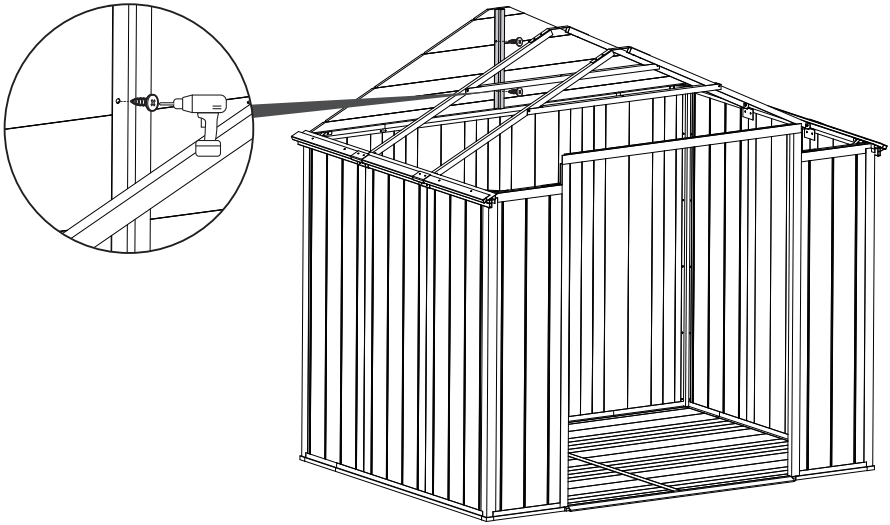

46


A43(x1)
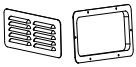
C66(x1)

Φ5X16
D65 (x6)

Electric Drill
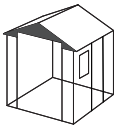

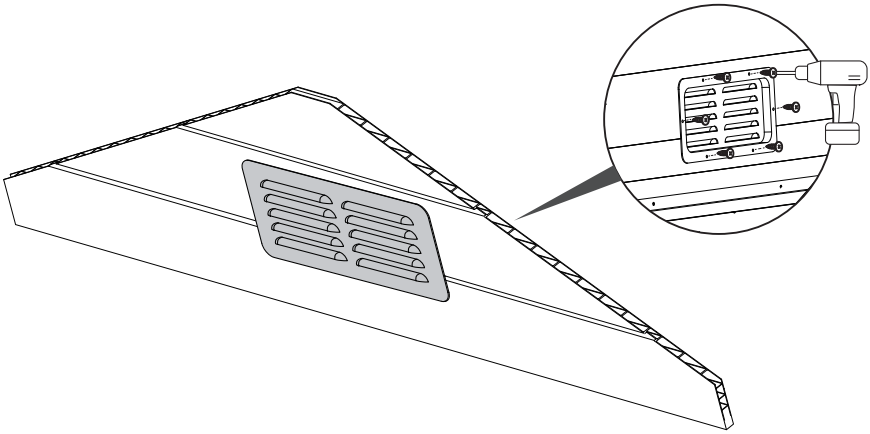

47


A41(x1)
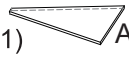
A42(x1)

A43(x1)

Ladder
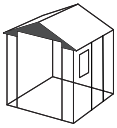

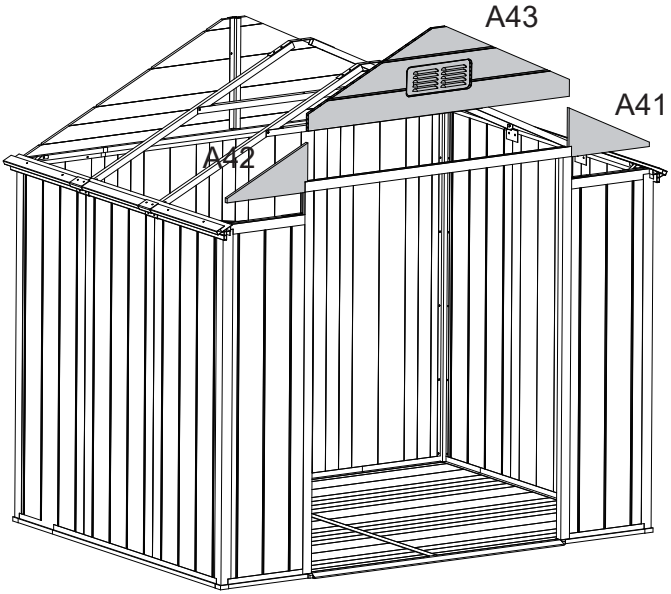

48 | A47 (x1) A48 (x2) Cork Hammer Ladder Double

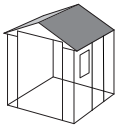

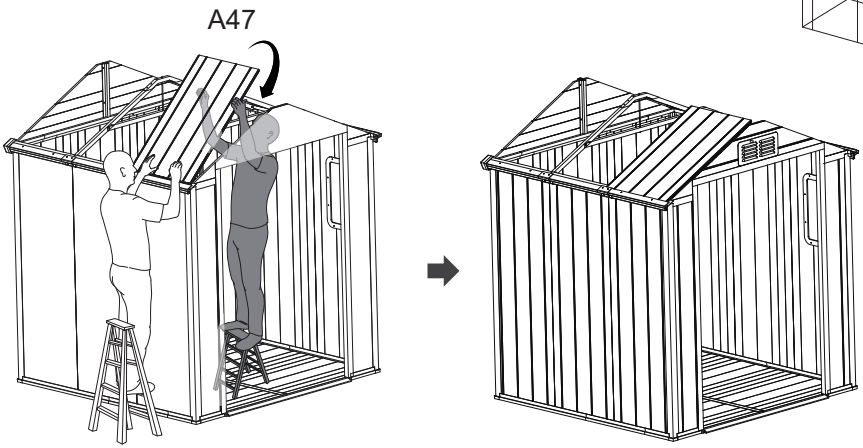

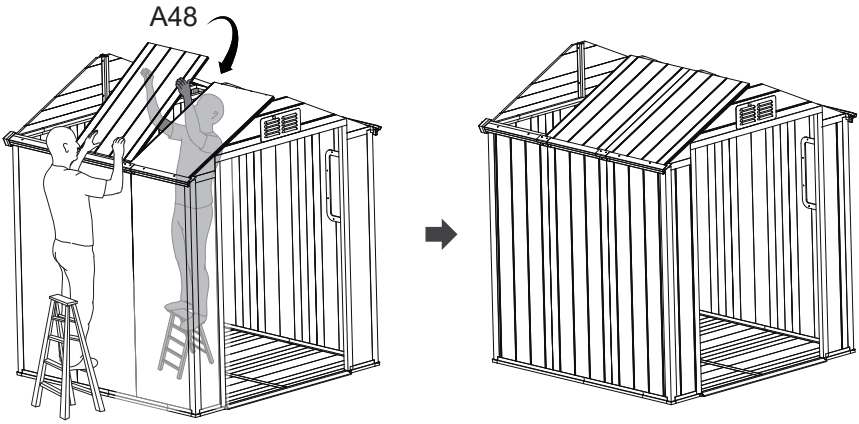

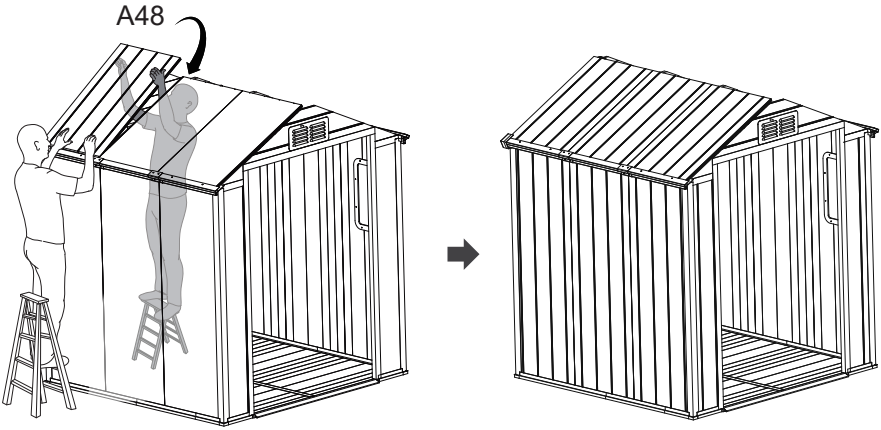

49 A47(x1) A48(x2) Cork Hammer Ladder Double

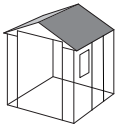

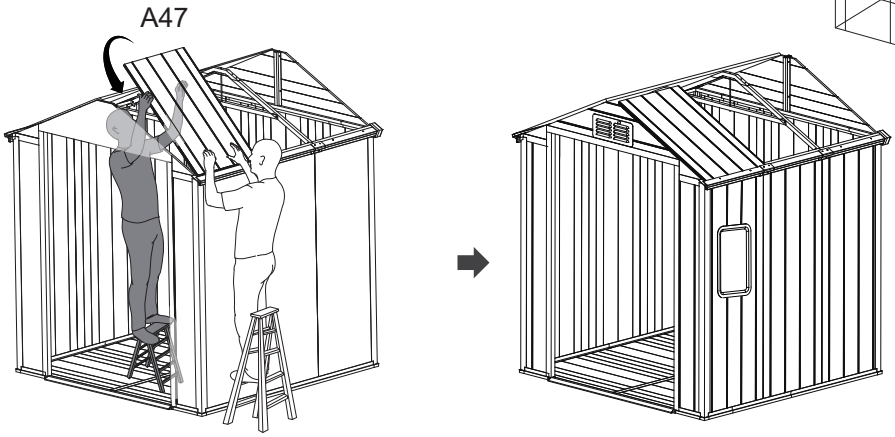

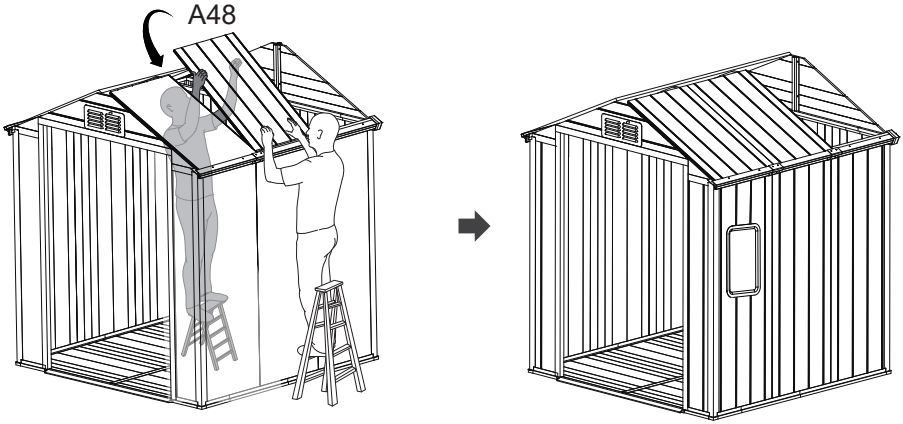

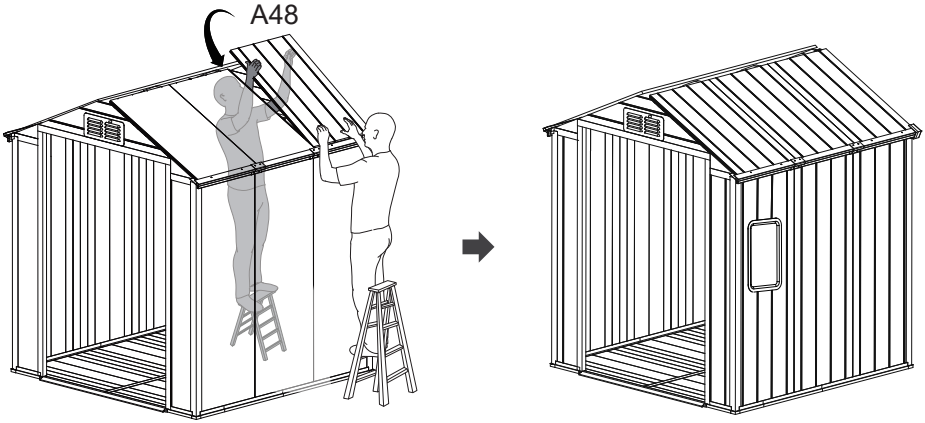

50

Φ5X16
D65(x8)

Electric Drill

Ladder

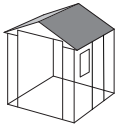

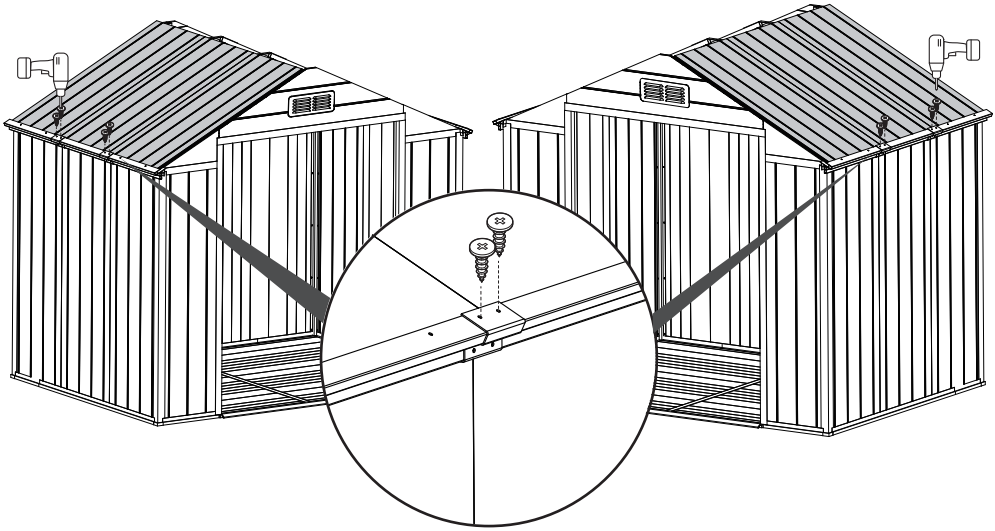

51

B49(x2)

B50(x2)

Cork Hammer

Ladder

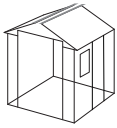

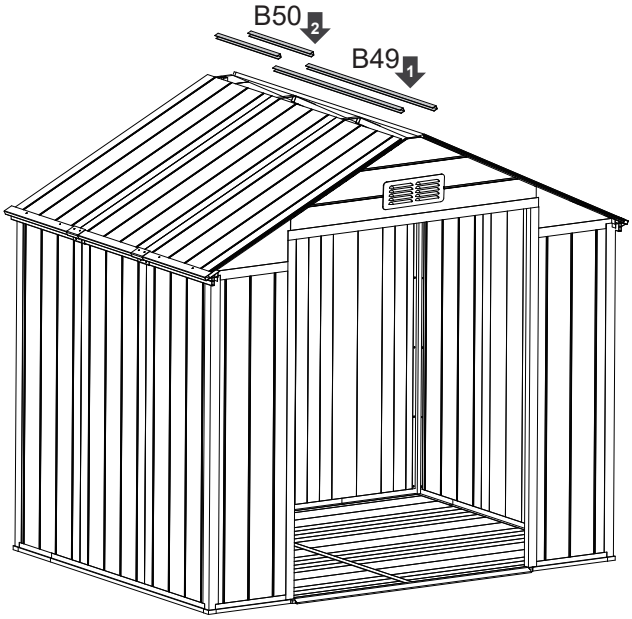

52

Φ5X16
D65(x10)

Electric Drill

Ladder

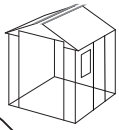

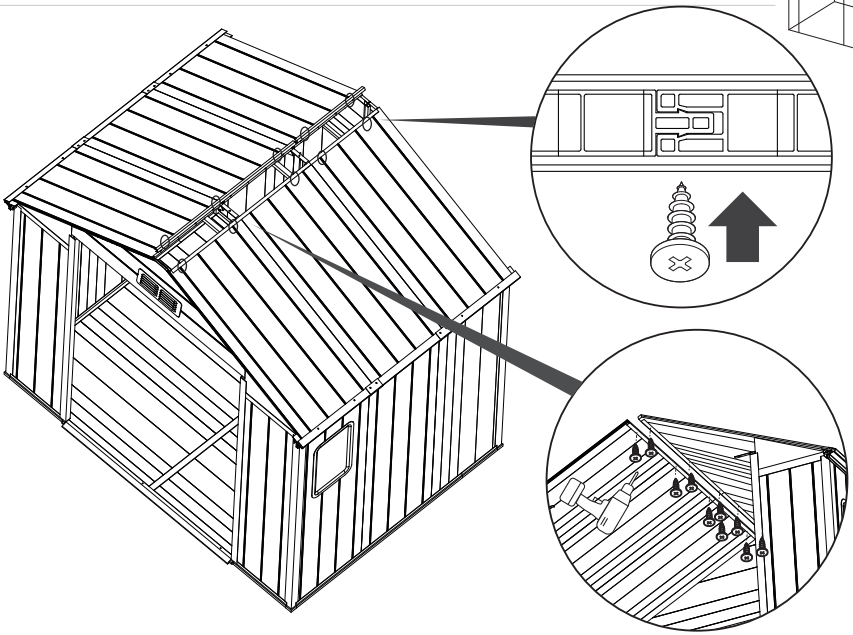

53

B51(x2)

B52(x2)

Cork Hammer

Ladder

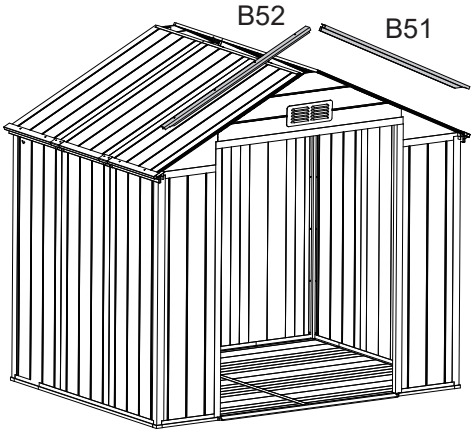

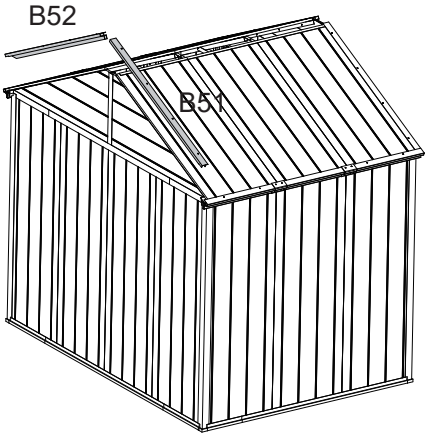

54

Φ5X16
D65 (x16)

Electric Drill

Ladder

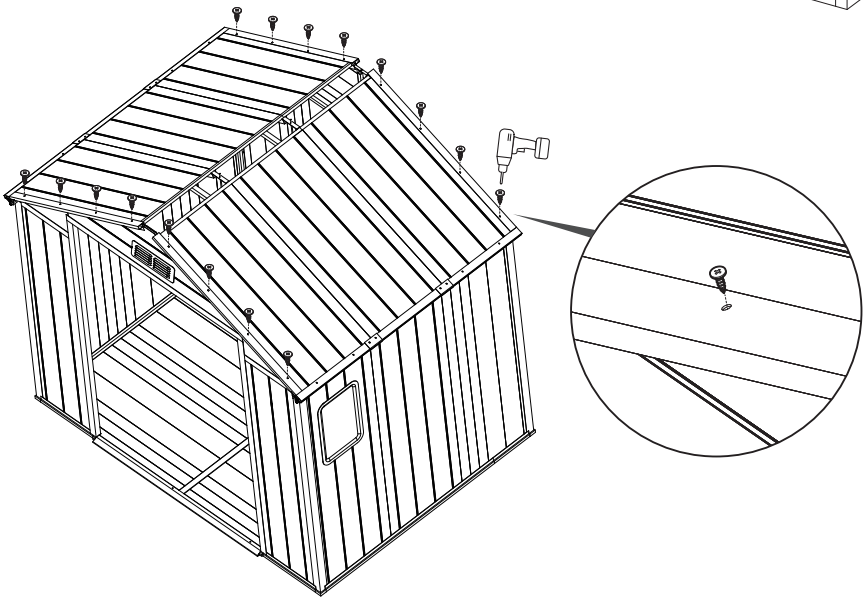

55

C53 (x2)

C54 (x2)

Cork Hammer

Ladder

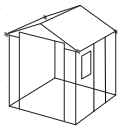

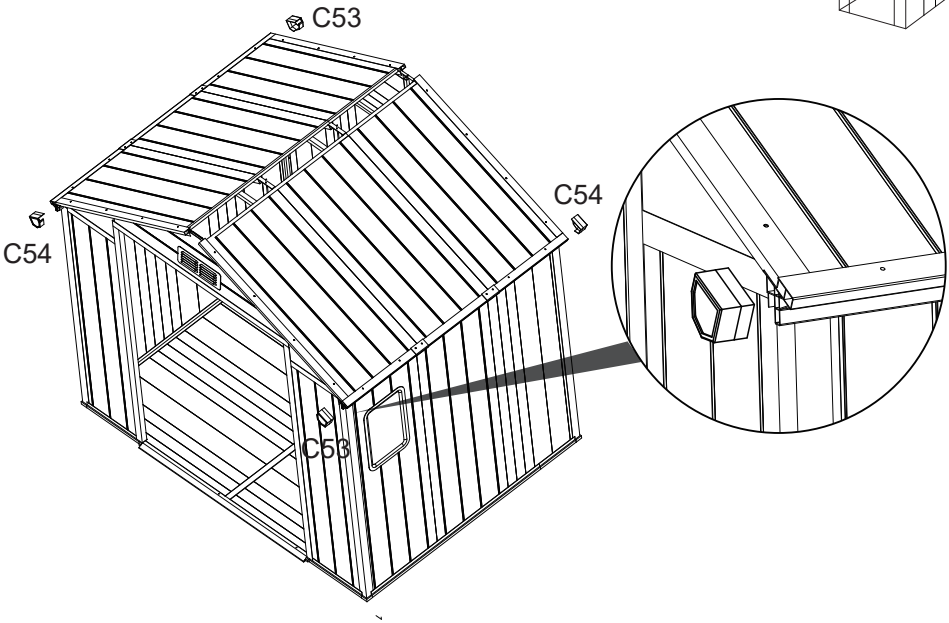

56

Φ5X16
D65 (x8)

Electric Drill

Ladder

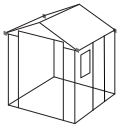

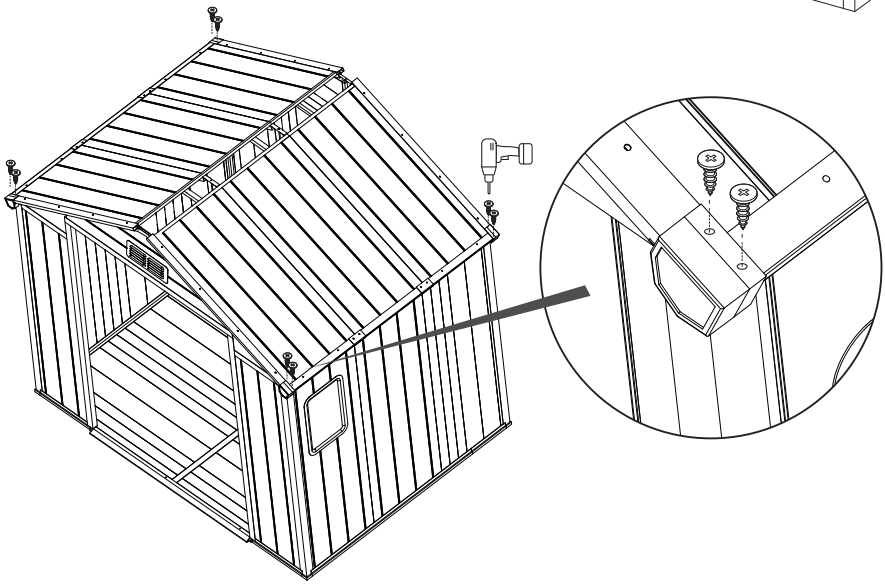

57

D55 (x1)

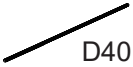

D40 (x2)

Ladder

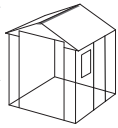

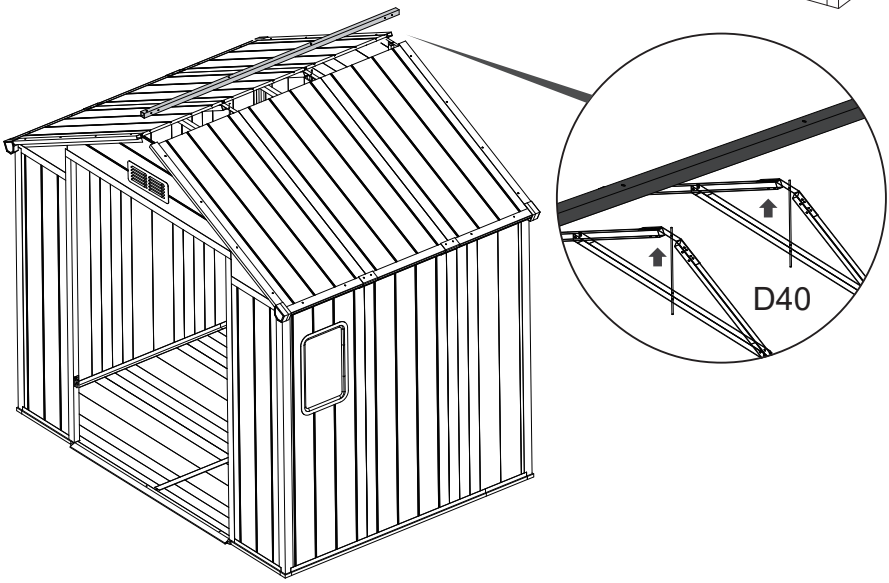

58

C56 (x1)

Ladder

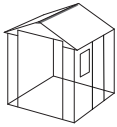

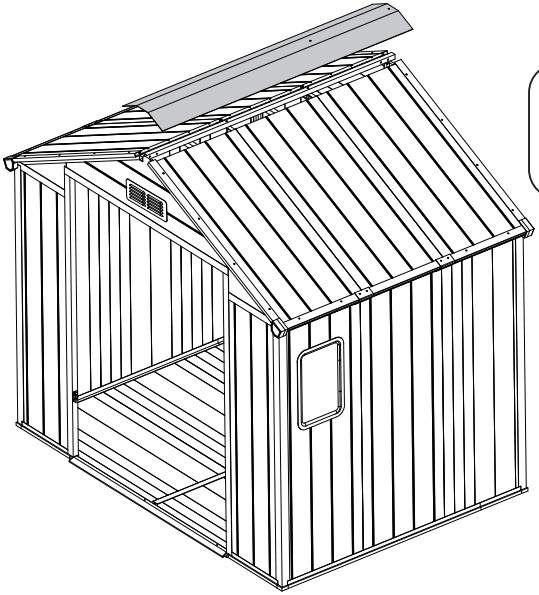

BE CAREFUL

The film needs to be torn off before installation

59

C57(x2)

Ladder

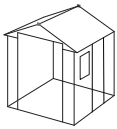

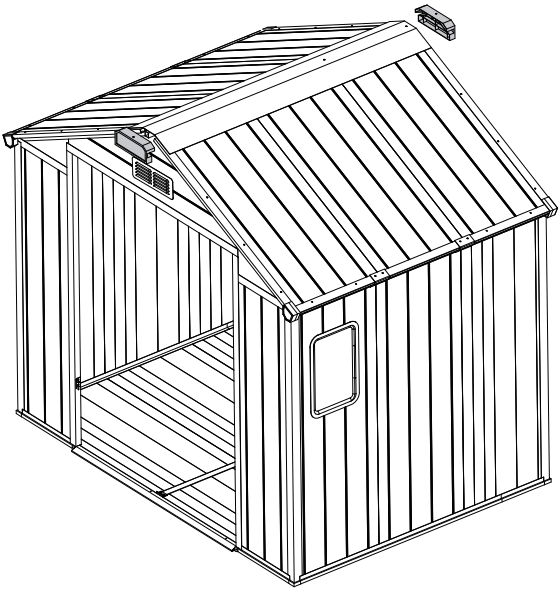

60 Φ4X16 D68(x2) Electric Drill Ladder

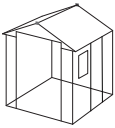

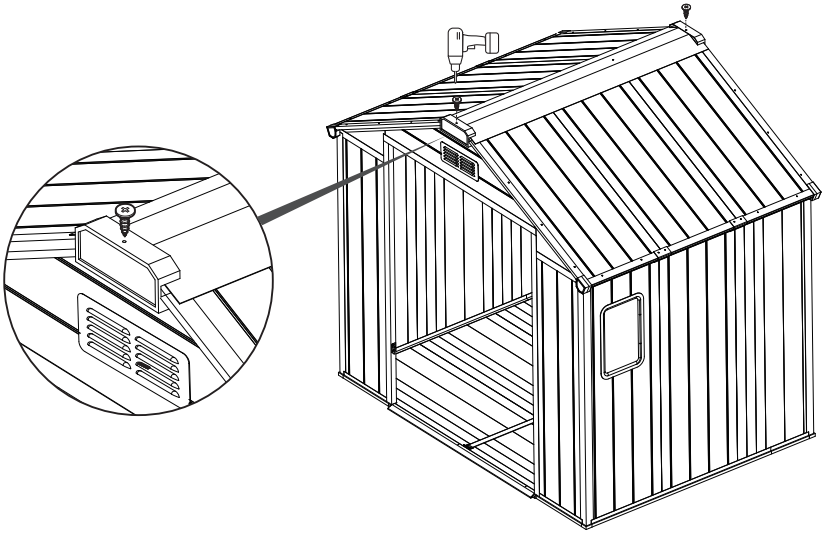

61 Φ4X16 D68(x33) Electric Drill Ladder

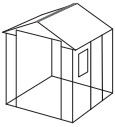

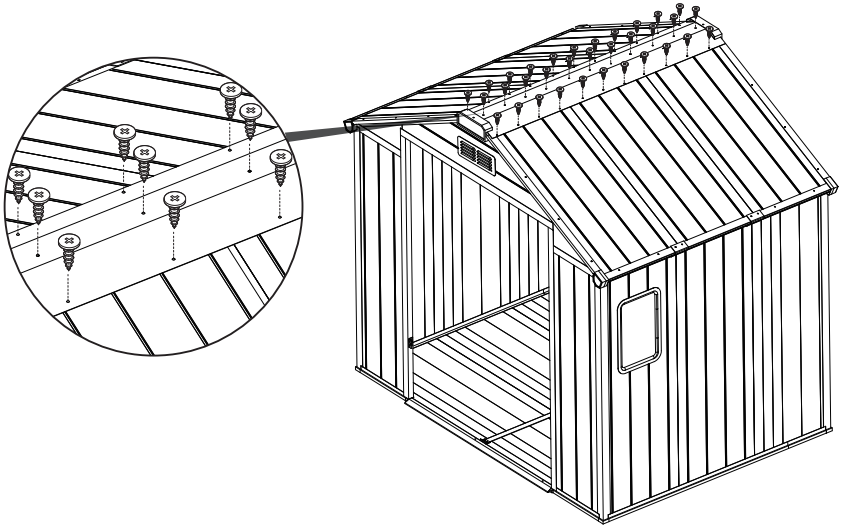

62

D63 (x1) Φ5X16 D65 (x2) Electric Drill

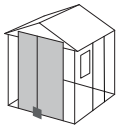

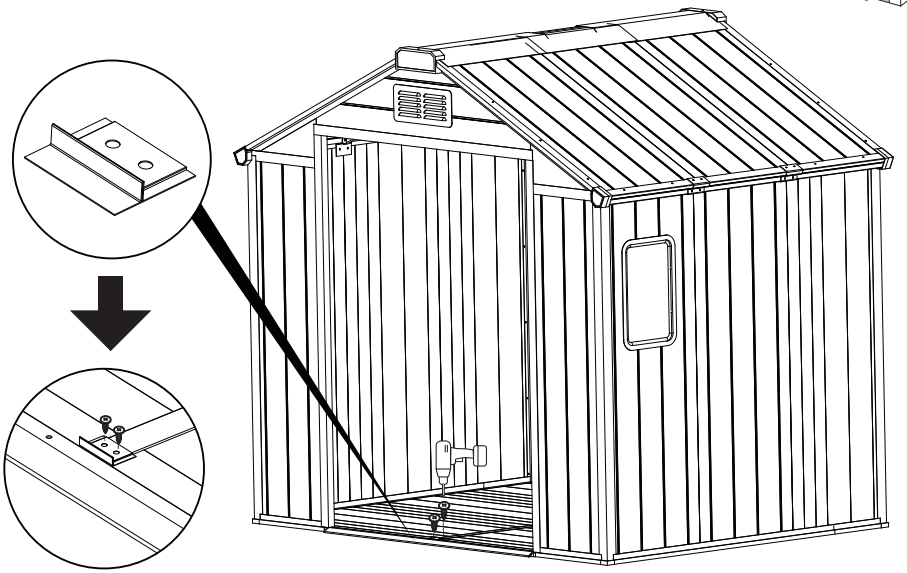

63

D62 (x1) Φ5X16 D65 (x2) Electric Drill Ladder

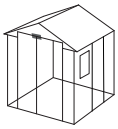

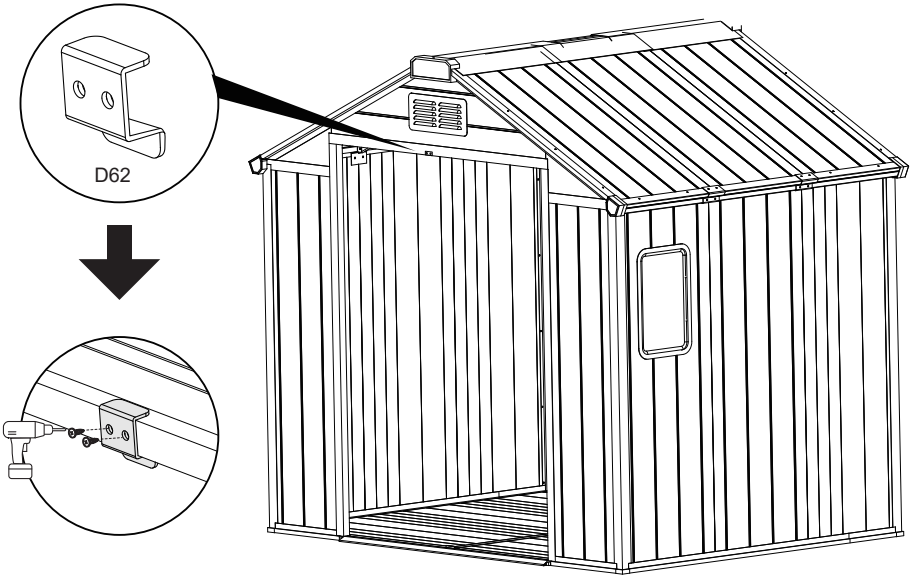

64


A58(x1)


A59(x1)


Φ4X16
D68(x18)


Electric Drill

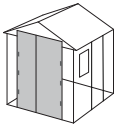

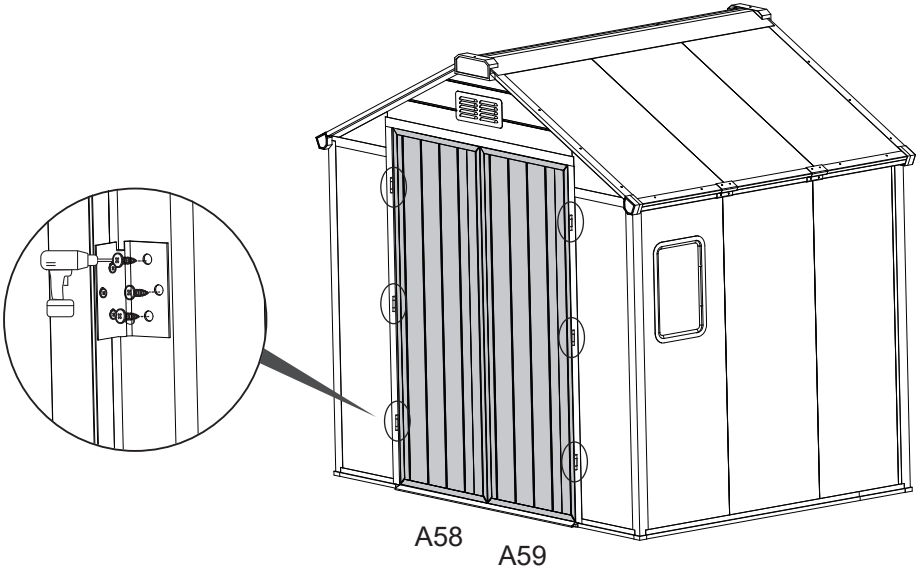

65


X2


X4

D60


D69(X1)


Small Wrench
Allen key

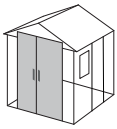

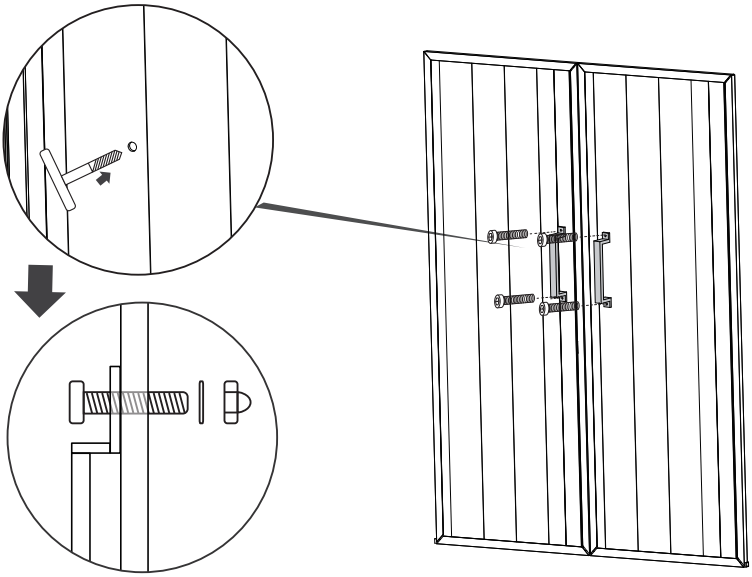

66

D61(x2)

Φ5X16
D65(x4)

Electric
Drill

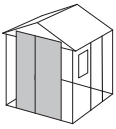

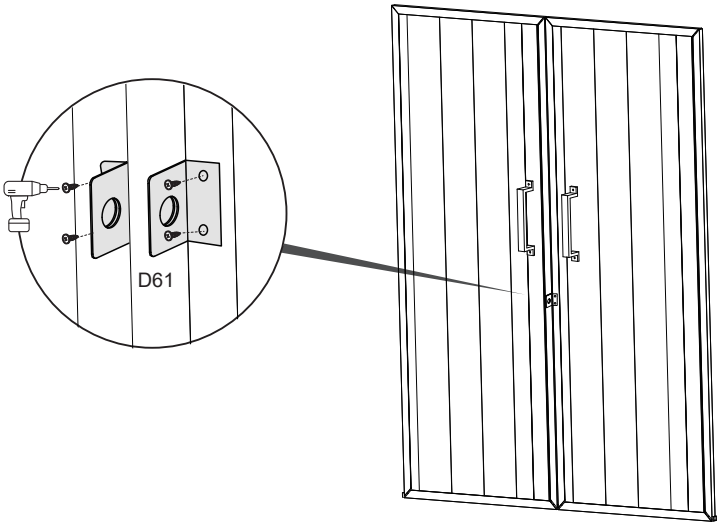

67


D70(x4)


Φ4X30
D67(x12)

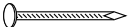
D90(x4)


Φ10X100
D91(x4)

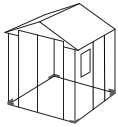

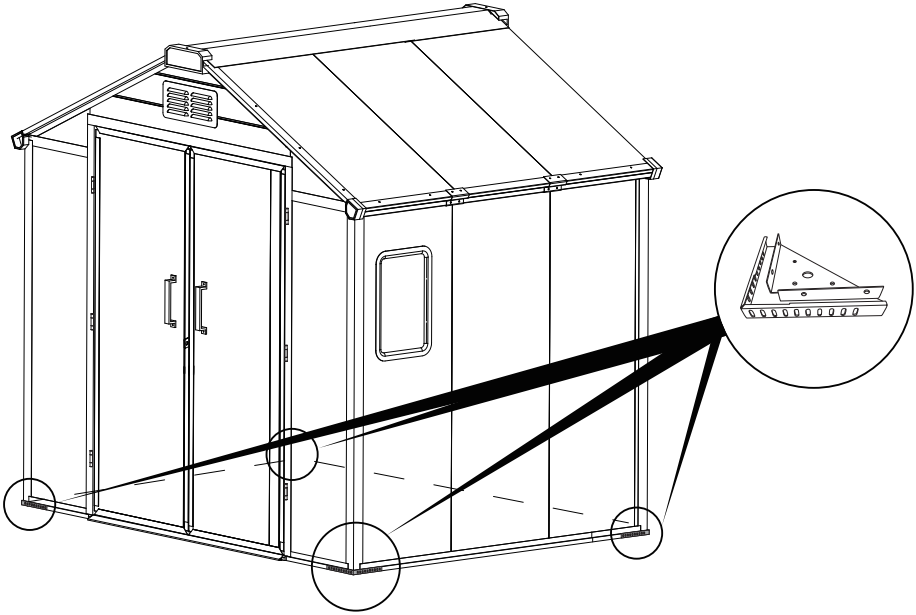

External Perspective

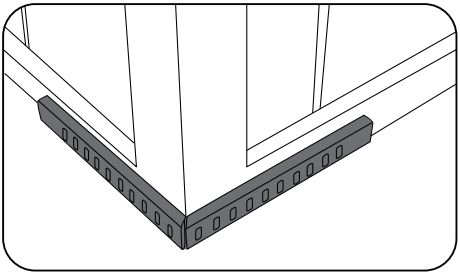

Internal Perspective

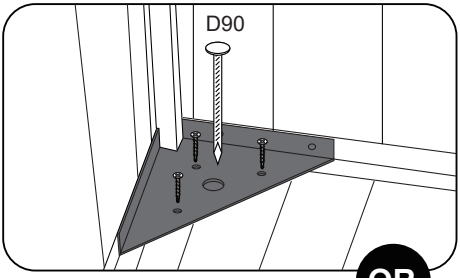

OR

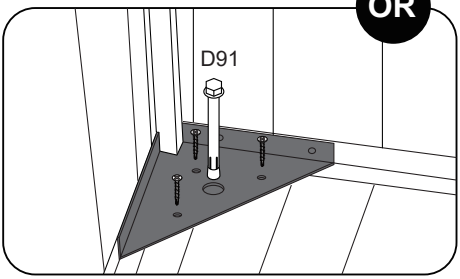

68 Finish

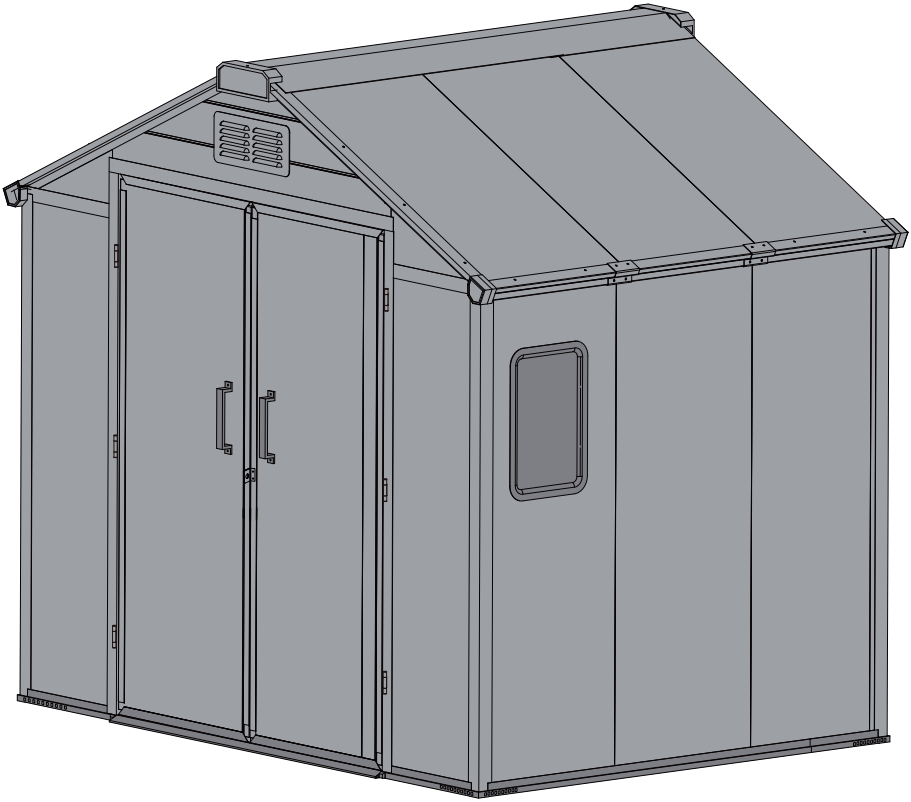

TOOL ROOM

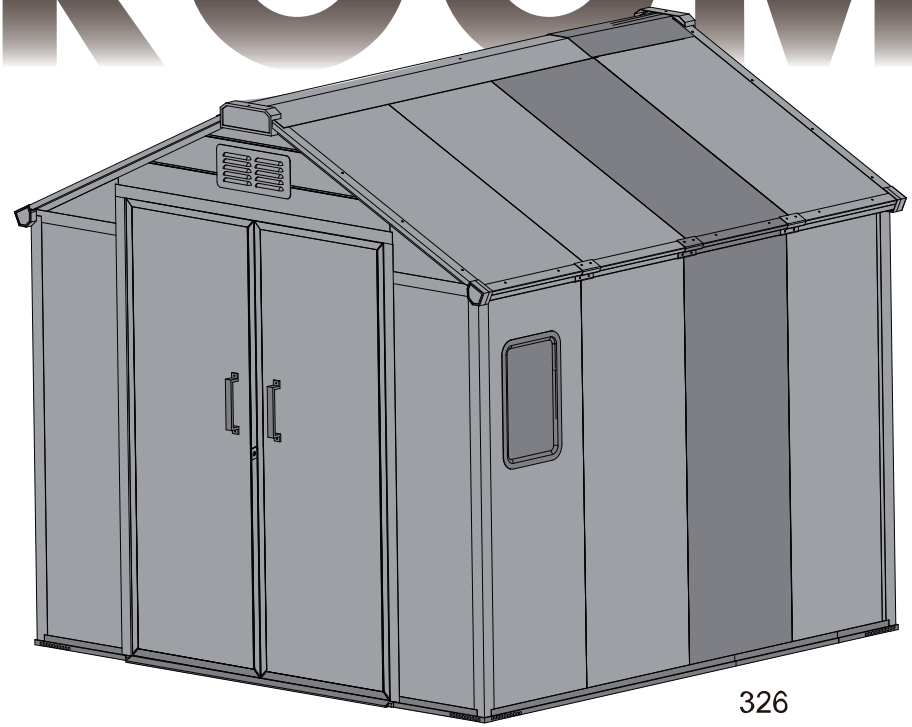

Outer box number

325-A (X1)
325-B (X1)
326 (X1)

8X8

FLOOR PARTS

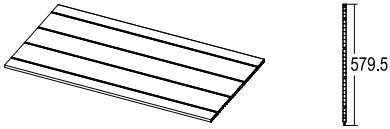

A1 (X2)

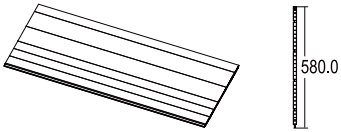

A2 (X4)

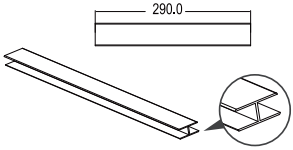

B3 (X1)

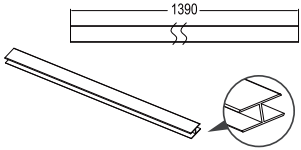

B4 (X1)

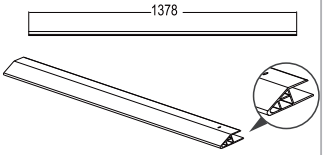

B5 (X1)

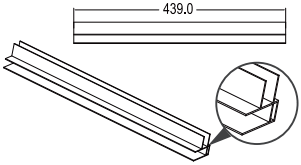

B8 (X4)

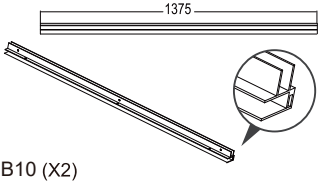

B10 (X2)

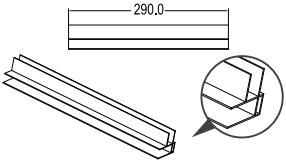

B11 (X2)

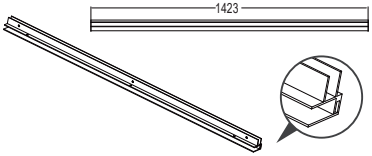

B12 (X1)

WALL PARTS

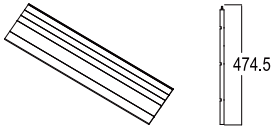

A16 (X1)

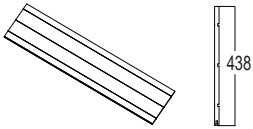

A17 (X1)

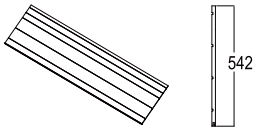

A22 (X1)

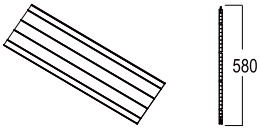

A23 (X7)

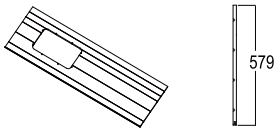

A24 (X1)

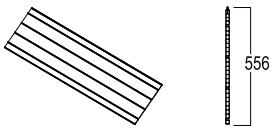

A25 (X1)

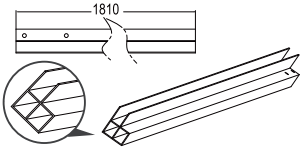

B13 (X1)

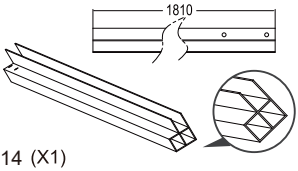

B14 (X1)

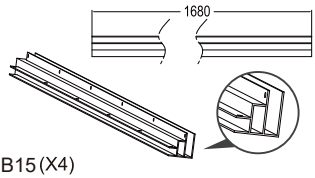

B15 (X4)

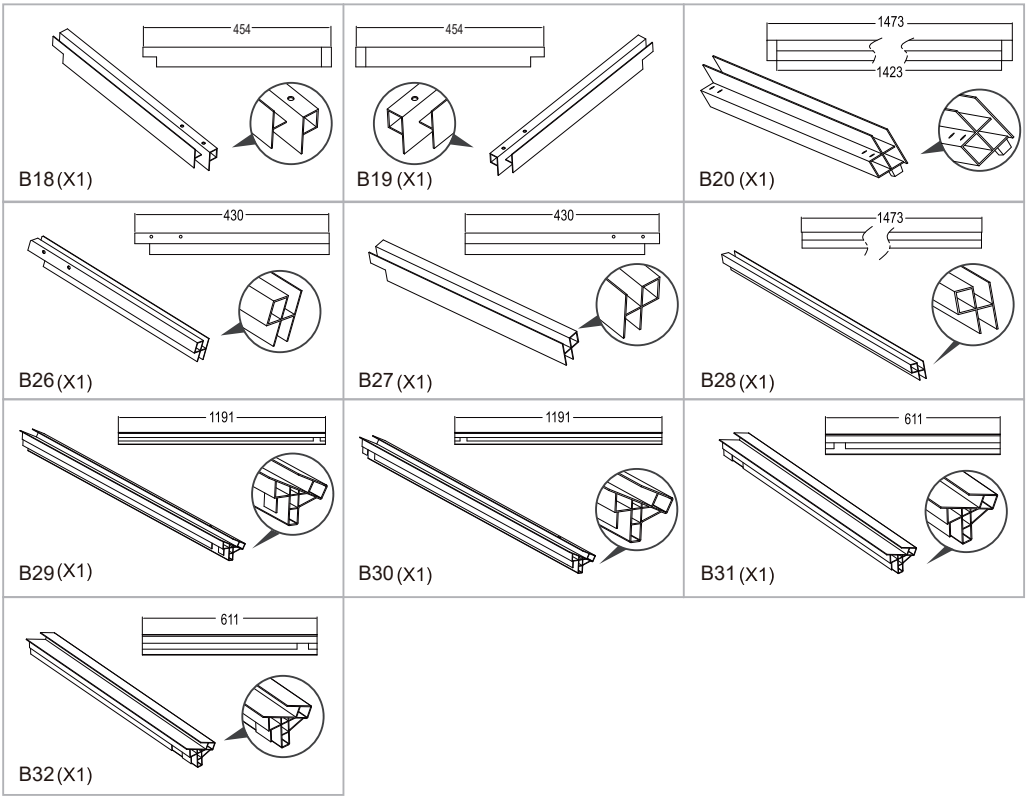
454
B18 (X1)
454
B19 (X1)
1473
1423
B20 (X1)
430
B26 (X1)
430
B27 (X1)
1473
B28 (X1)
1191
B29 (X1)
1191
B30 (X1)
611
B31 (X1)
611
B32 (X1)

ROOF PARTS

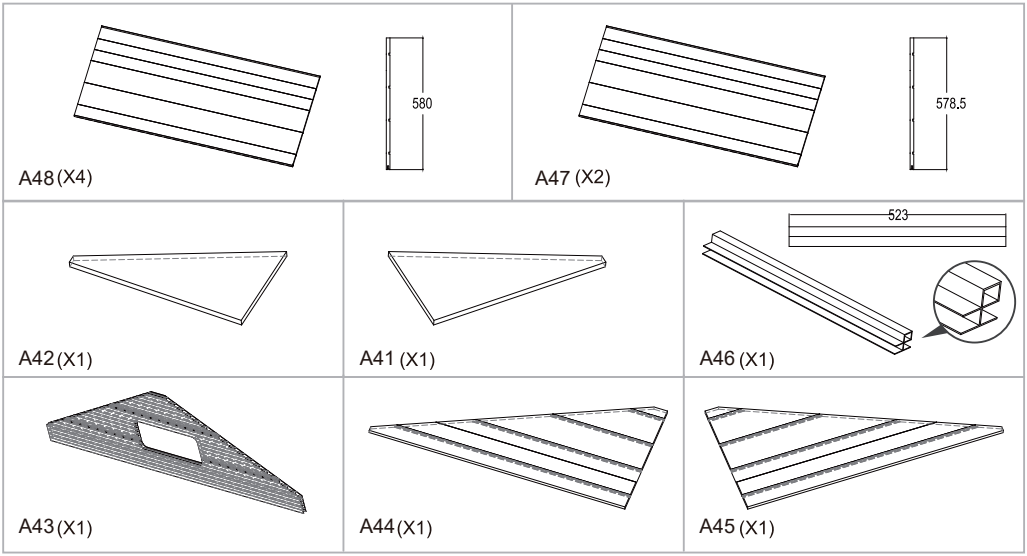
580
A48 (X4)
578.5
A47 (X2)
A42 (X1)
A41 (X1)
523
A46 (X1)
A43 (X1)
A44 (X1)
A45 (X1)

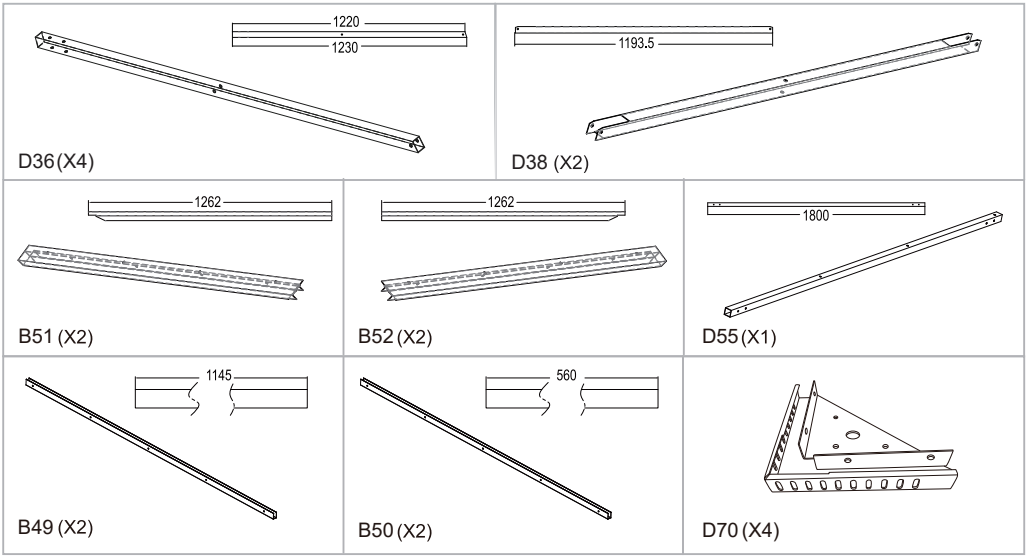

ROOF PARTS

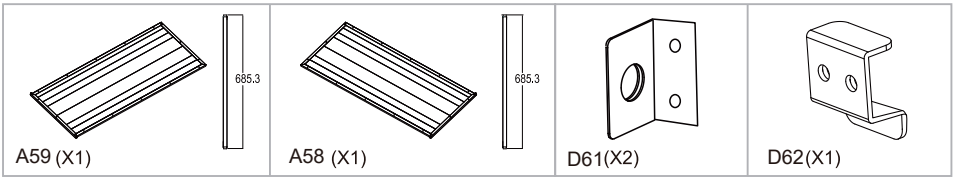

SMALL PARTS

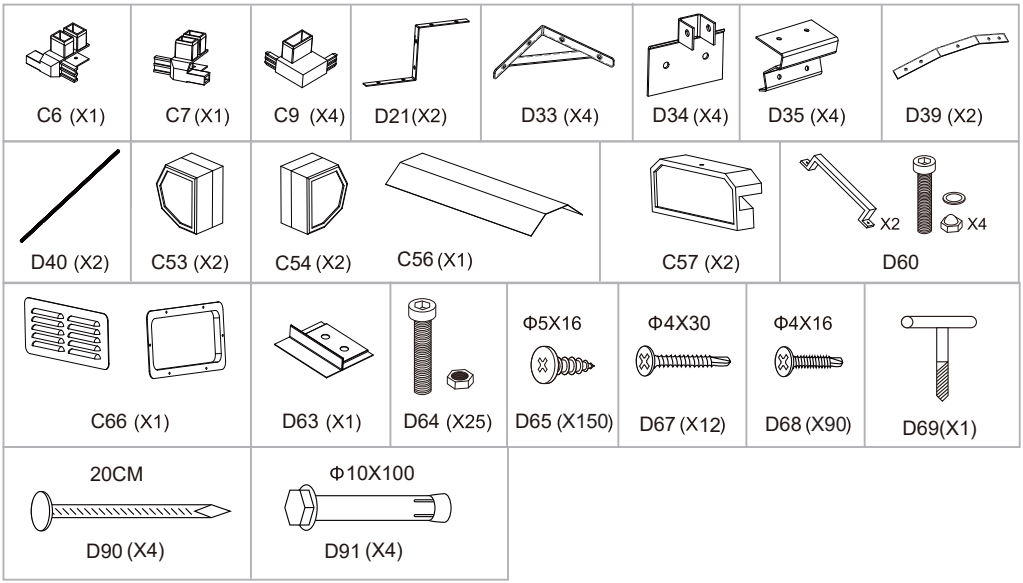

FLOOR PARTS

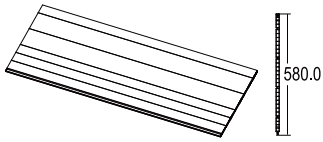

A71 (X2)

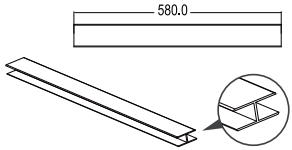

B72 (X1)

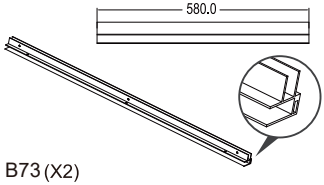

B73 (X2)

WALL PARTS

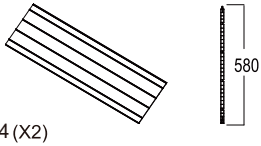

A74 (X2)

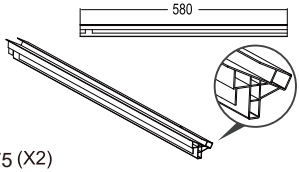

B75 (X2)

ROOF PARTS

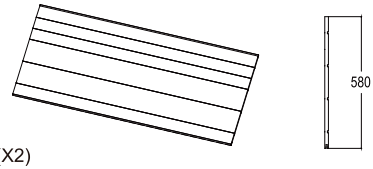

A83 (X2)

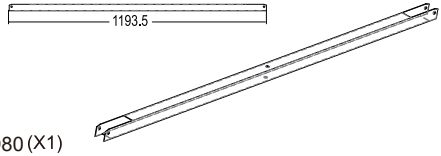

D80 (X1)

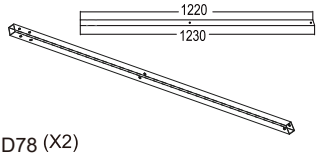

D78 (X2)

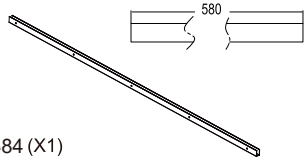

B84 (X1)

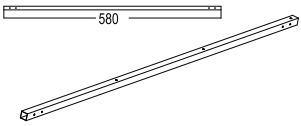

D85 (X1)

SMALL PARTS

D76 (X2)

D77 (X2)

D81 (X1)

D82 (X1)

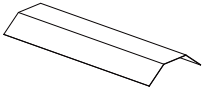

C86 (X1)

Φ5X16

D88 (X50)

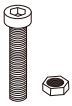

D87 (X12)

Φ4X16

D89 (X15)

TOOL ROOM

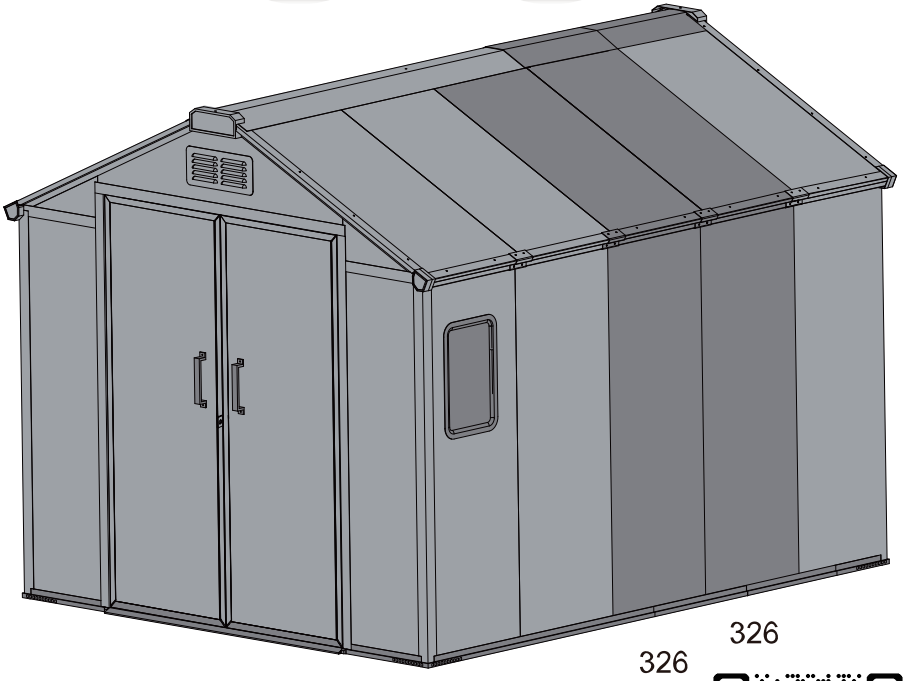

Outer box number

325-A (X1)
325-B (X1)
326 (X2)

8X10

FLOOR PARTS

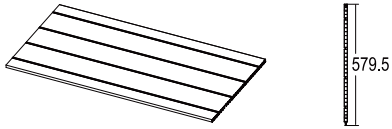

A1 (X2)

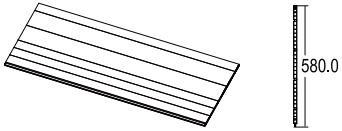

A2 (X4)

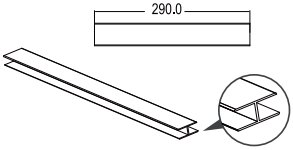

B3 (X1)

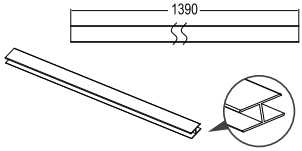

B4 (X1)

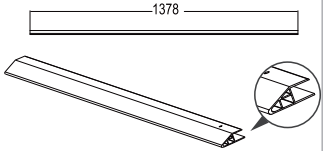

B5 (X1)

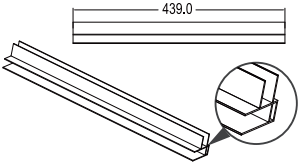

B8 (X4)

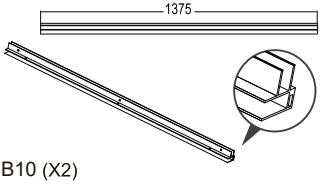

B10 (X2)

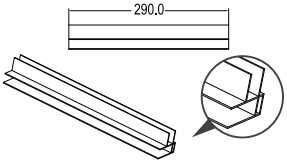

B11 (X2)

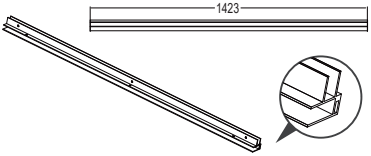

B12 (X1)

WALL PARTS

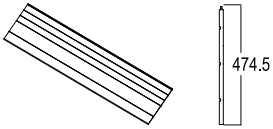

A16 (X1)

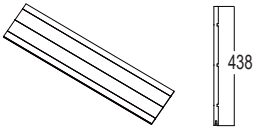

A17 (X1)

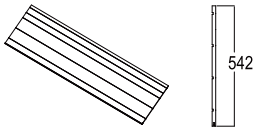

A22 (X1)

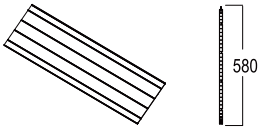

A23 (X7)

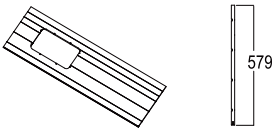

A24 (X1)

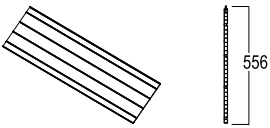

A25 (X1)

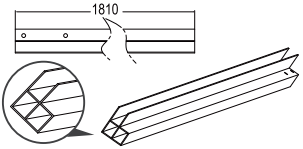

B13 (X1)

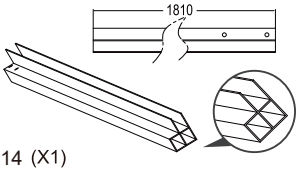

B14 (X1)

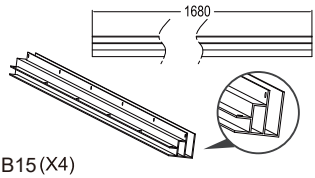

B15 (X4)

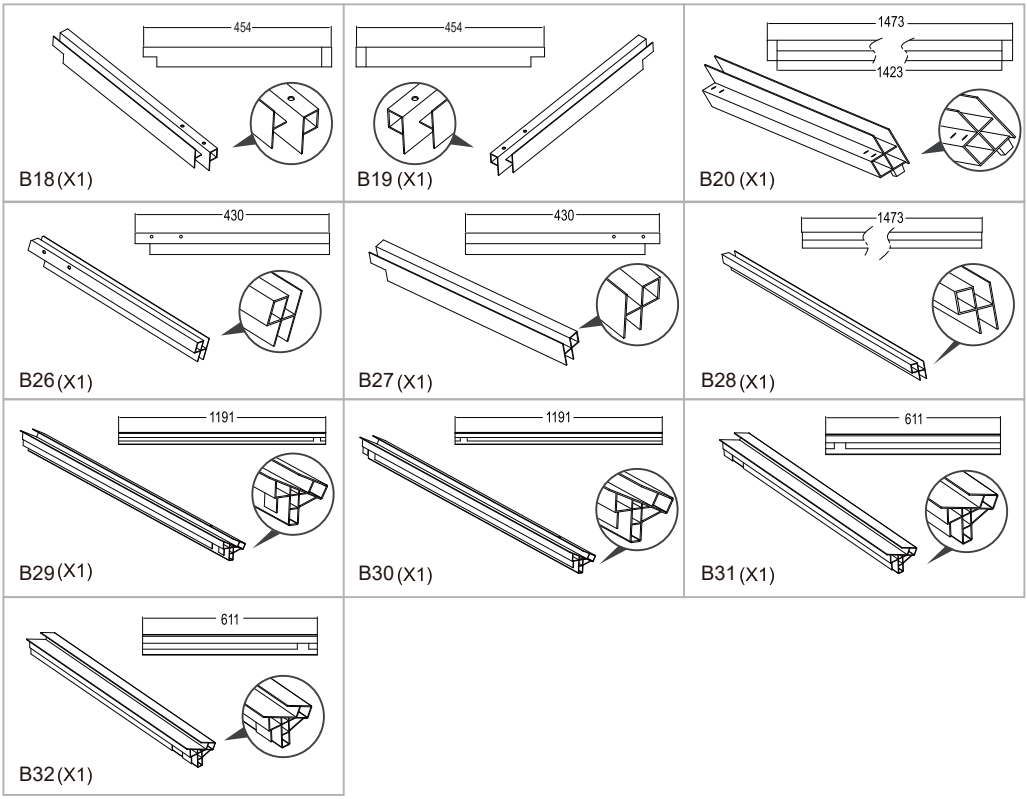
454
B18 (X1)
454
B19 (X1)
1473
1423
B20 (X1)
430
B26 (X1)
430
B27 (X1)
1473
B28 (X1)
1191
B29 (X1)
1191
B30 (X1)
611
B31 (X1)
611
B32 (X1)

ROOF PARTS

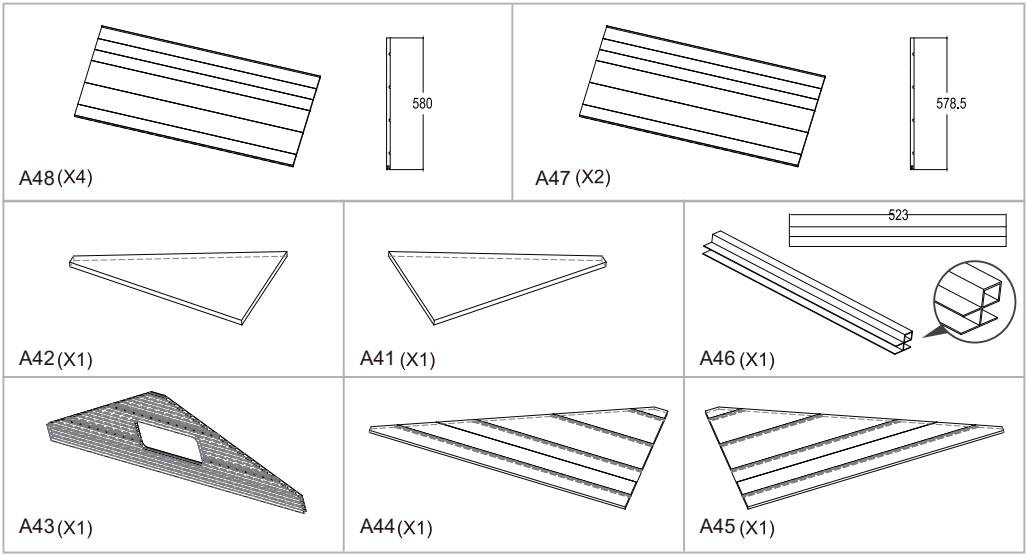
580
A48 (X4)
578.5
A47 (X2)
A42 (X1)
A41 (X1)
523
A46 (X1)
A43 (X1)
A44 (X1)
A45 (X1)

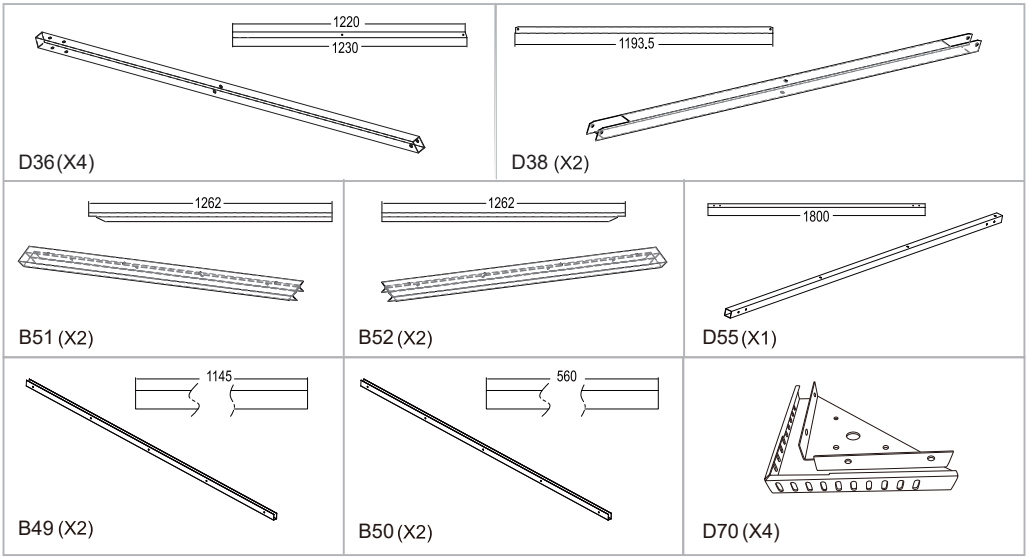

ROOF PARTS

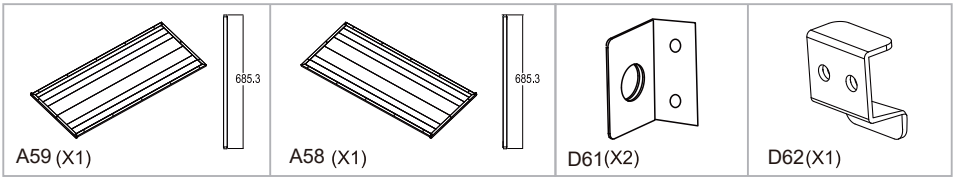

SMALL PARTS

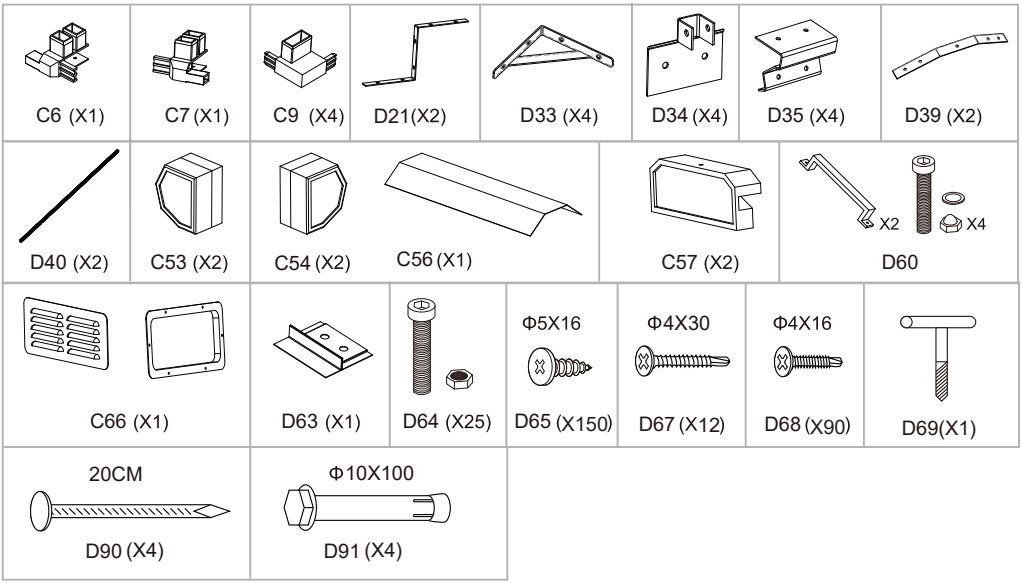

FLOOR PARTS

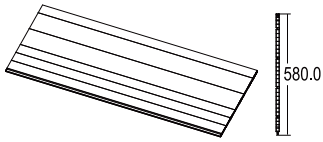

A71 (X4)

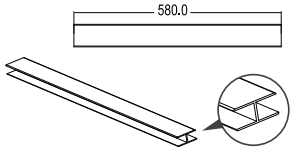

B72 (X2)

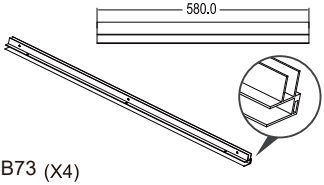

B73 (X4)

WALL PARTS

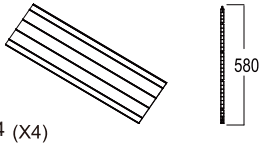

A74 (X4)

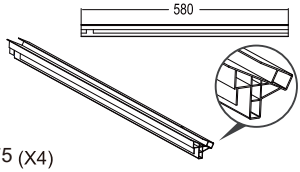

B75 (X4)

ROOF PARTS

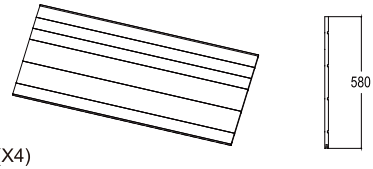

A83 (X4)

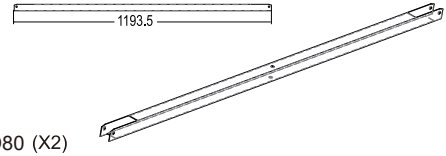

D80 (X2)

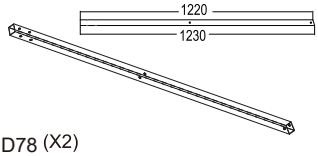

D78 (X2)

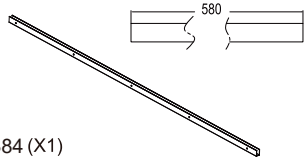

B84 (X1)

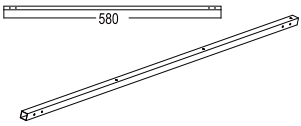

D85 (X1)

SMALL PARTS

D76 (X4)

D77(X4)

D81 (X2)

D82 (X2)

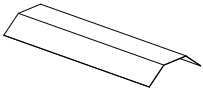

C86 (X2)

Φ5X16

D88 (X100)

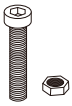

D87 (X24)

Φ4X16

D89 (X30)

TOOL ROOM

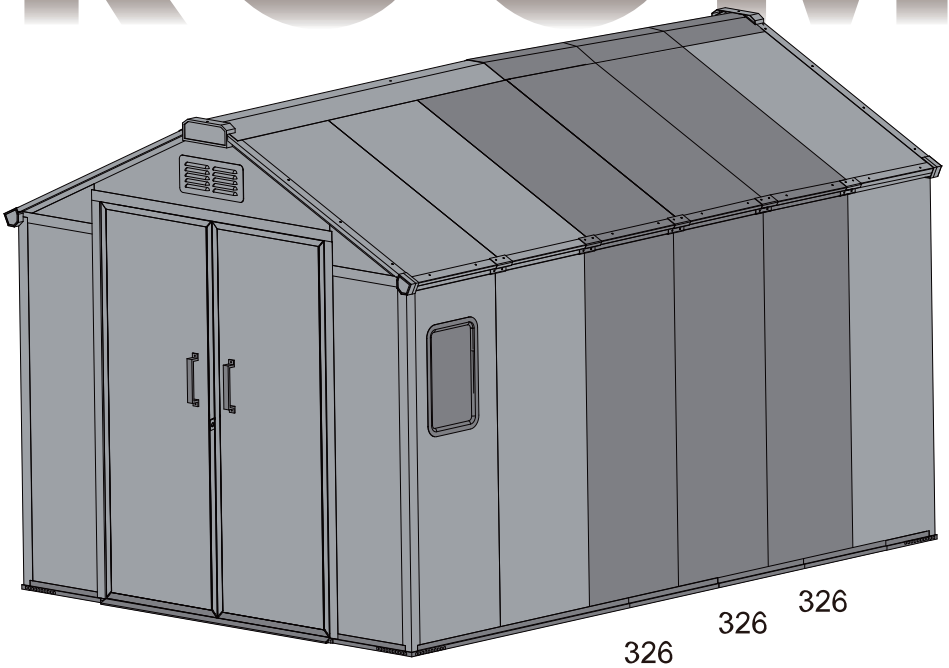

Outer box number

325-A (X1)
325-B (X1)
326 (X3)

8X12

FLOOR PARTS

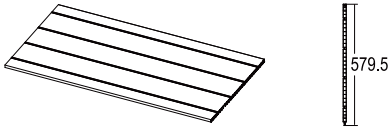

A1 (X2)

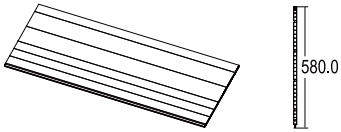

A2 (X4)

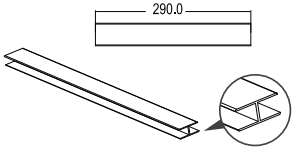

B3 (X1)

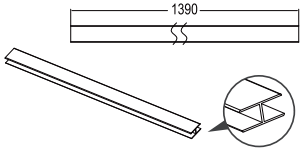

B4 (X1)

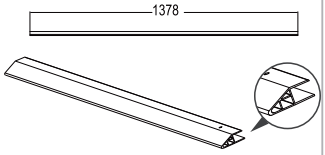

B5 (X1)

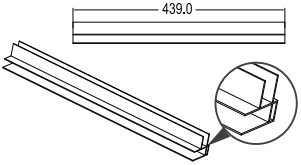

B8 (X4)

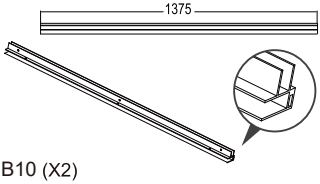

B10 (X2)

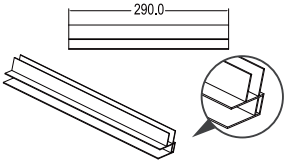

B11 (X2)

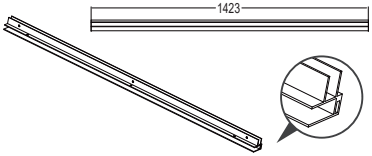

B12 (X1)

WALL PARTS

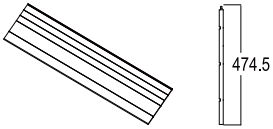

A16 (X1)

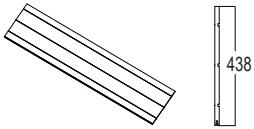

A17 (X1)

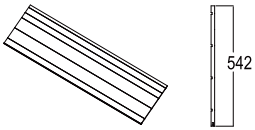

A22 (X1)

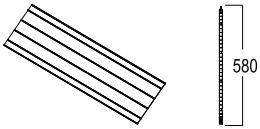

A23 (X7)

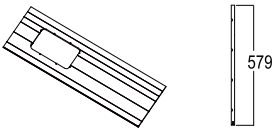

A24 (X1)

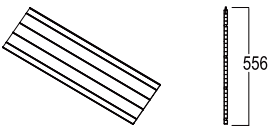

A25 (X1)

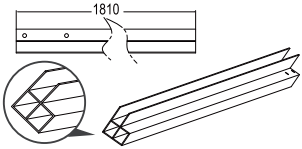

B13 (X1)

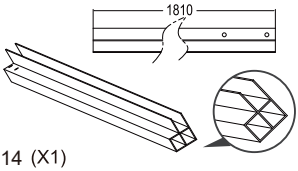

B14 (X1)

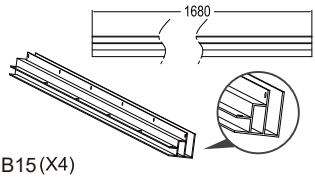

B15 (X4)

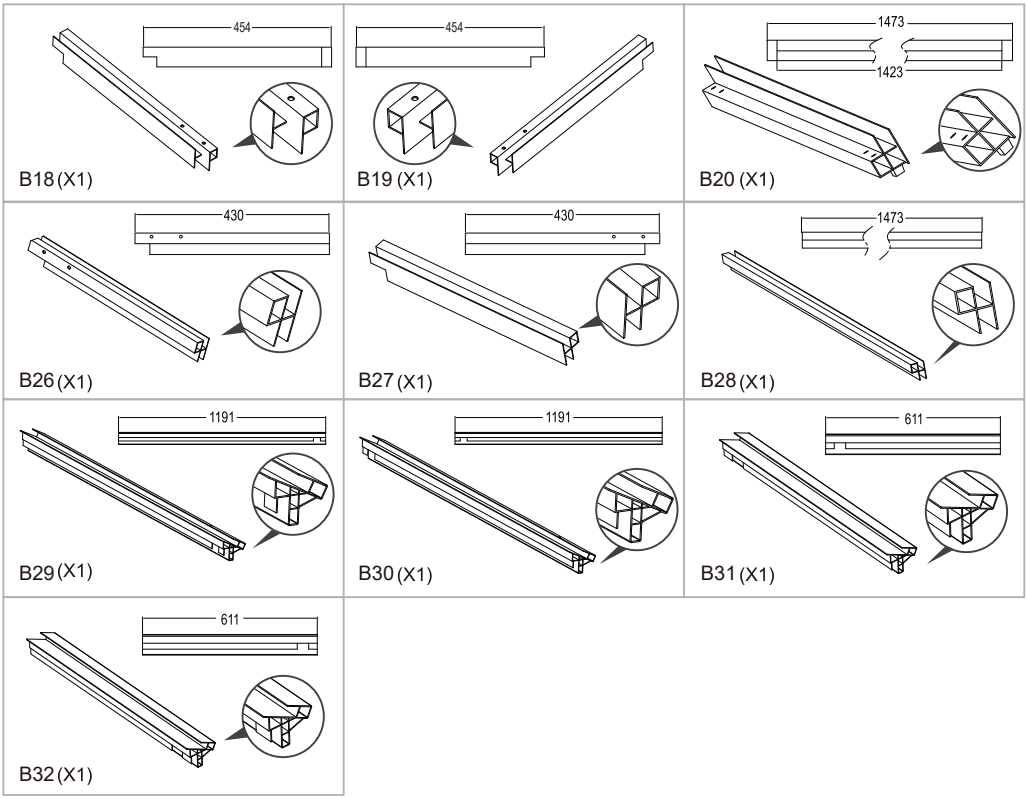
454
B18 (X1)
454
B19 (X1)
1473
1423
B20 (X1)
430
B26 (X1)
430
B27 (X1)
1473
B28 (X1)
1191
B29 (X1)
1191
B30 (X1)
611
B31 (X1)
611
B32 (X1)

ROOF PARTS

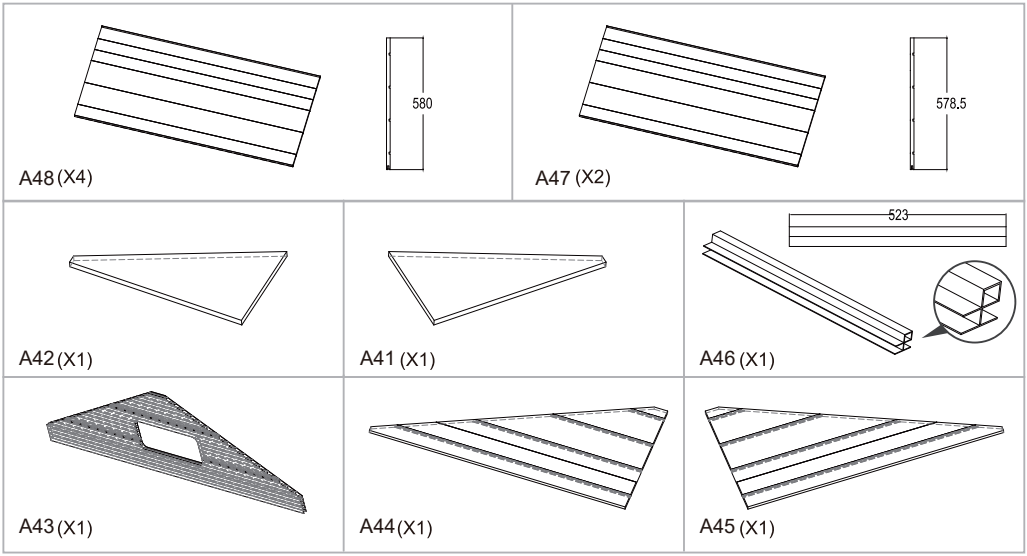
580
A48 (X4)
578.5
A47 (X2)
A42 (X1)
A41 (X1)
523
A46 (X1)
A43 (X1)
A44 (X1)
A45 (X1)

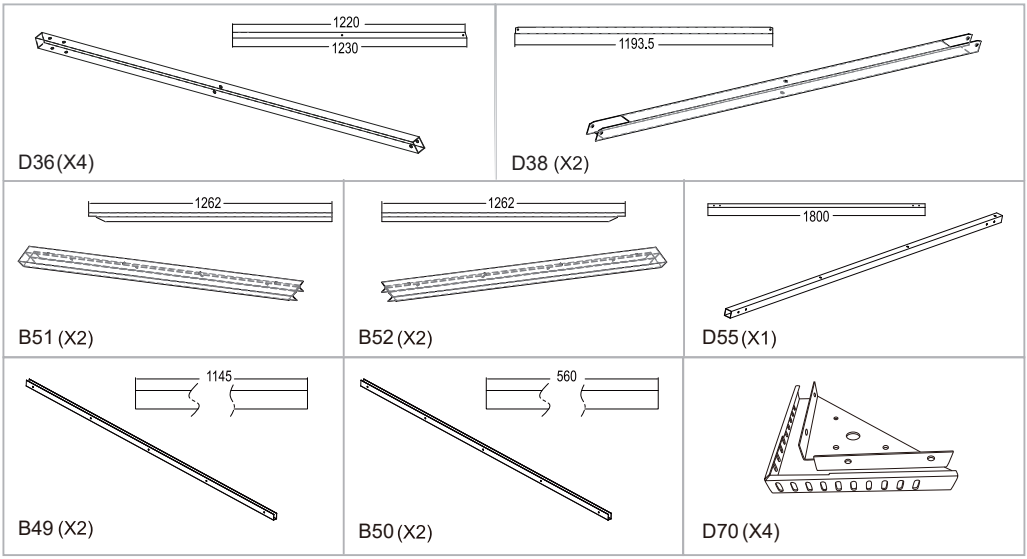

ROOF PARTS

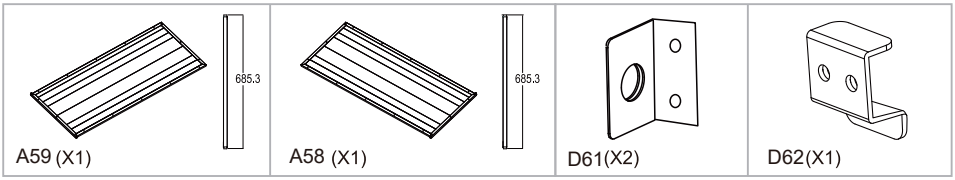

SMALL PARTS

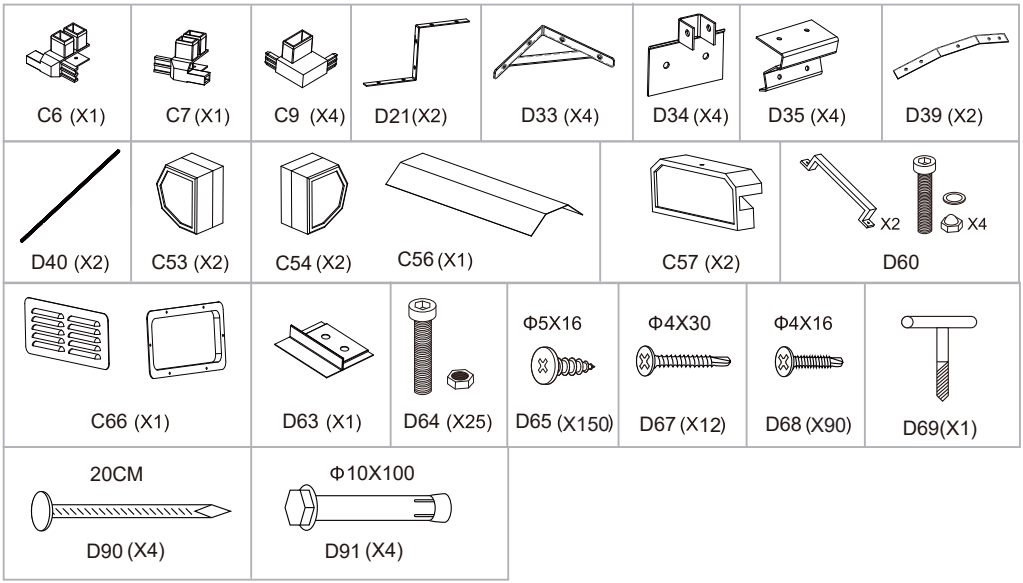

FLOOR PARTS

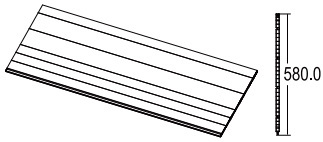

A71 (X6)

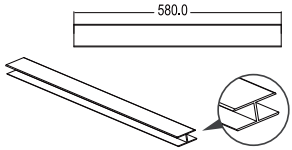

B72 (X3)

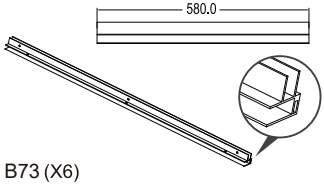

B73 (X6)

WALL PARTS

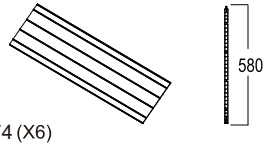

A74 (X6)

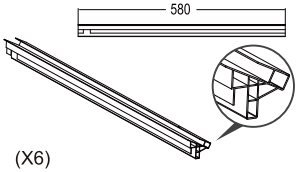

(X6)

ROOF PARTS

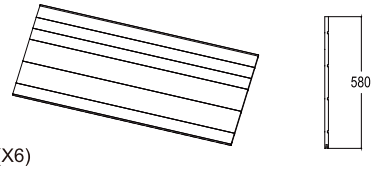

A83 (X6)

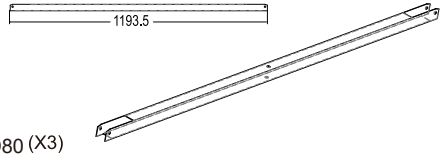

D80 (X3)

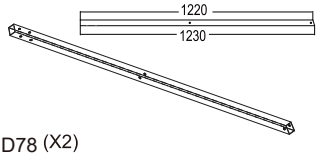

D78 (X2)

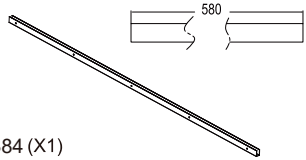

B84 (X1)

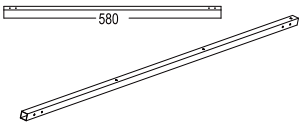

D85 (X1)

SMALL PARTS

D76 (X6)

D77(X6)

D81 (X3)

D82 (X3)

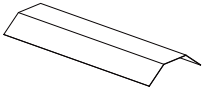

C86 (X3)

Φ5X16

D88(X150)

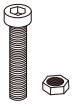

D87 (X36)

Φ4X16

D89 (X45)

1

A1(x1) A2(x2) A71(x1)

Cork Hammer

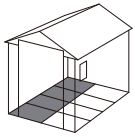

8x8 Usage A71(X1)

8x10 Usage A71(X2)

8x12 Usage A71(X3)

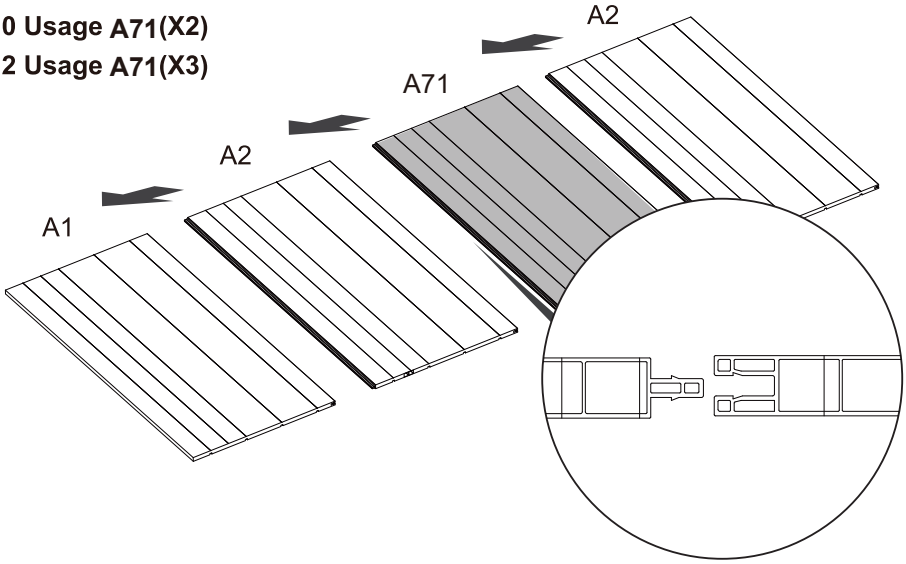

2

B3 (X1) B4 (X1) B72 (X1)

Cork Hammer

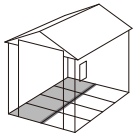

8x8 Usage B72(X1)

8x10 Usage B72(X2)

8x12 Usage B72(X3)

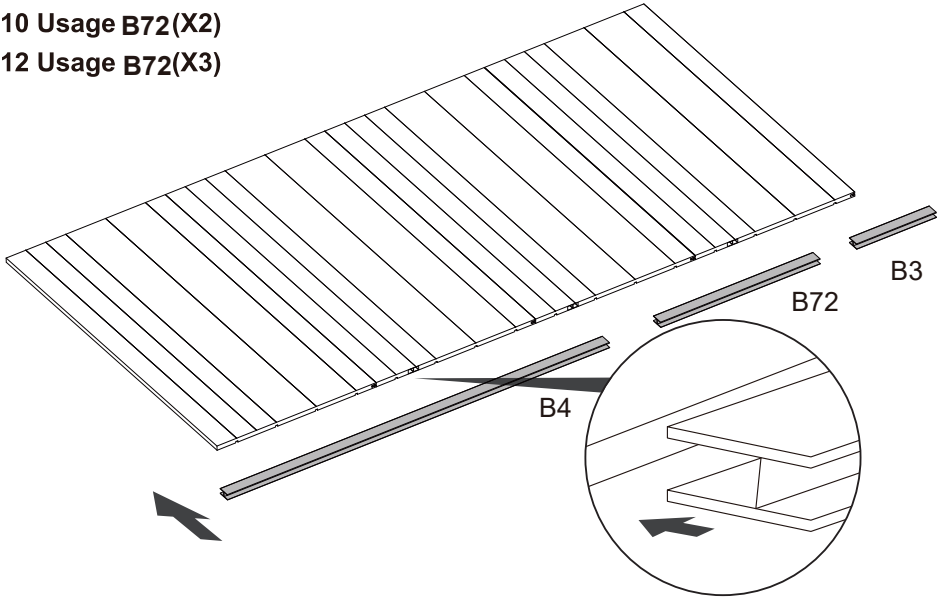

3

A1(x1) A2(x2) A71(x1)

Cork Hammer

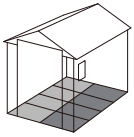

8x8 Usage A71(X1)

8x10 Usage A71(X2)

8x12 Usage A71(X3)

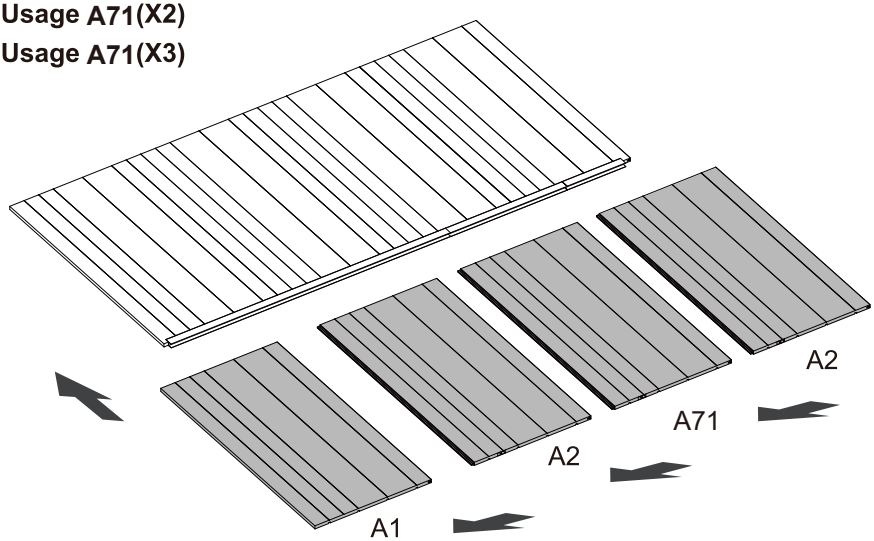

4

Φ5X16
D65/D88 (x14)

Electric Drill

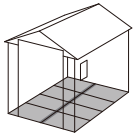

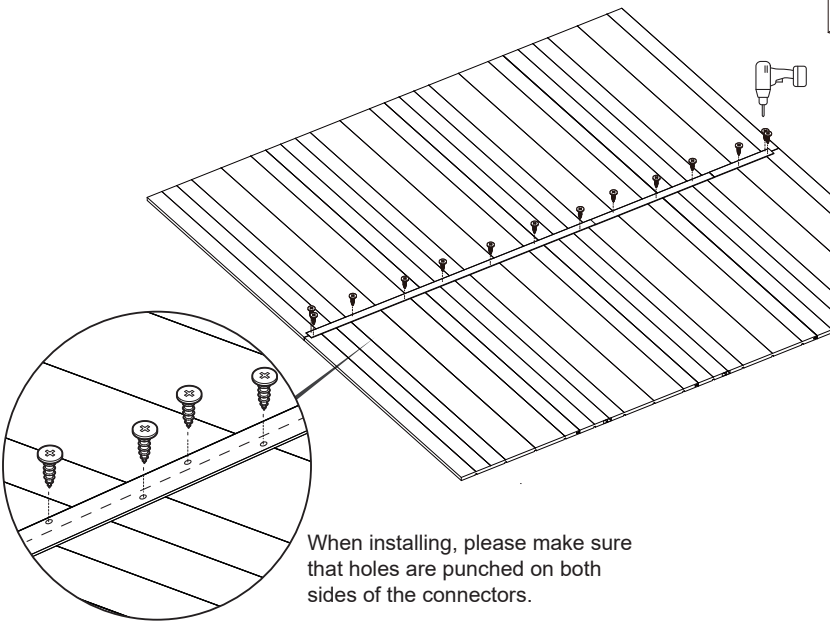

When installing, please make sure that holes are punched on both sides of the connectors.

5

C9 (x1)

Cork Hammer

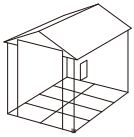

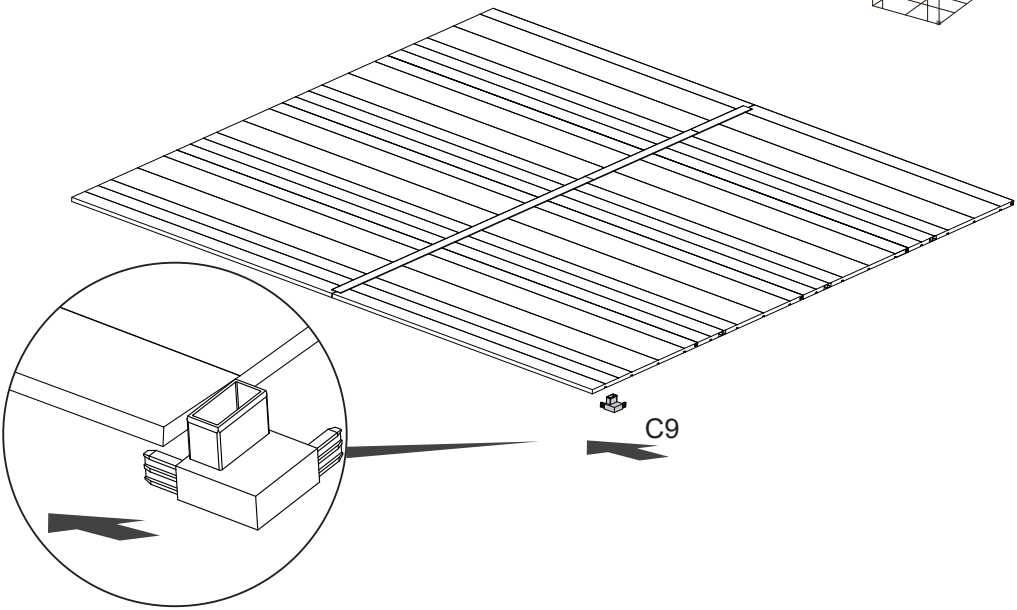

6

B8 (x1)

Cork Hammer

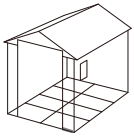

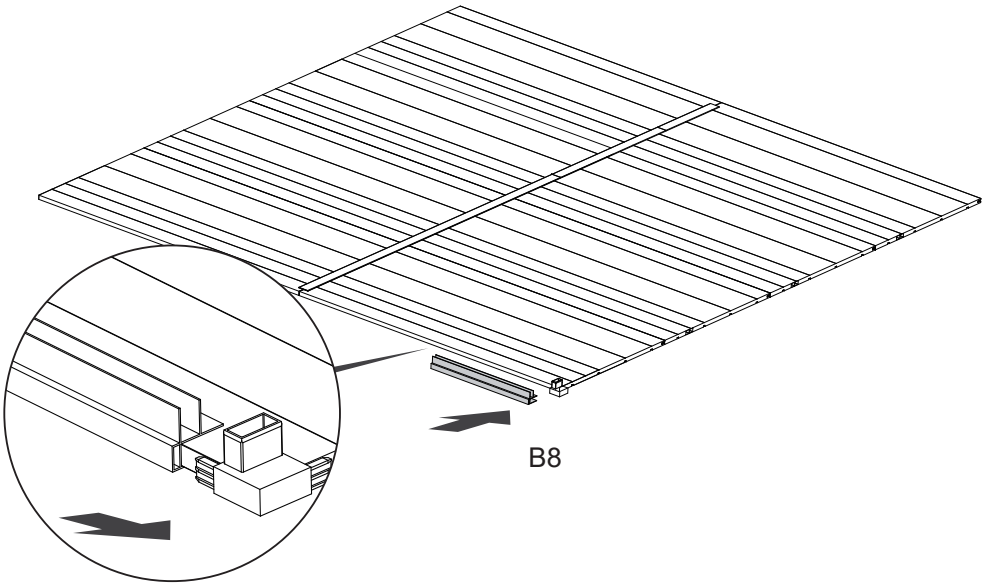

7

C6 (x1)

Cork Hammer

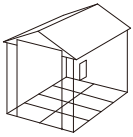

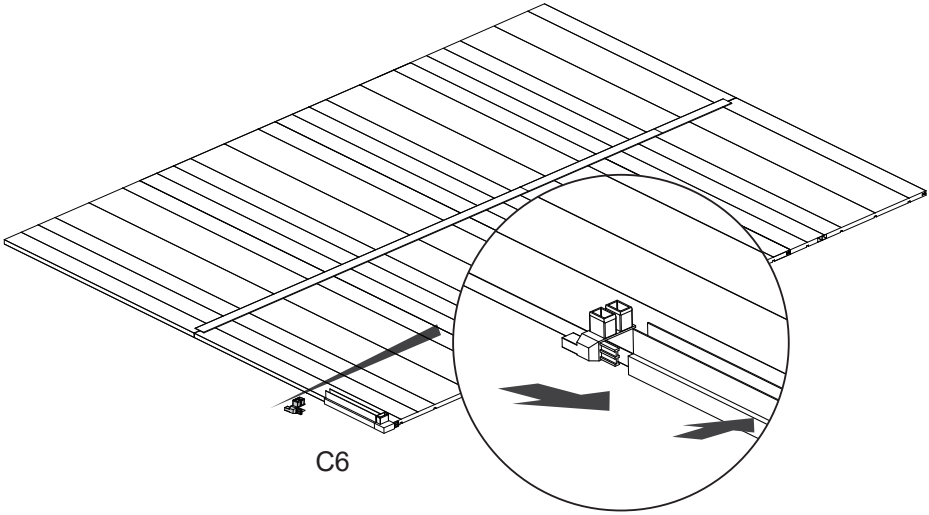

8

B5 (x1)

Cork Hammer

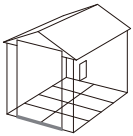

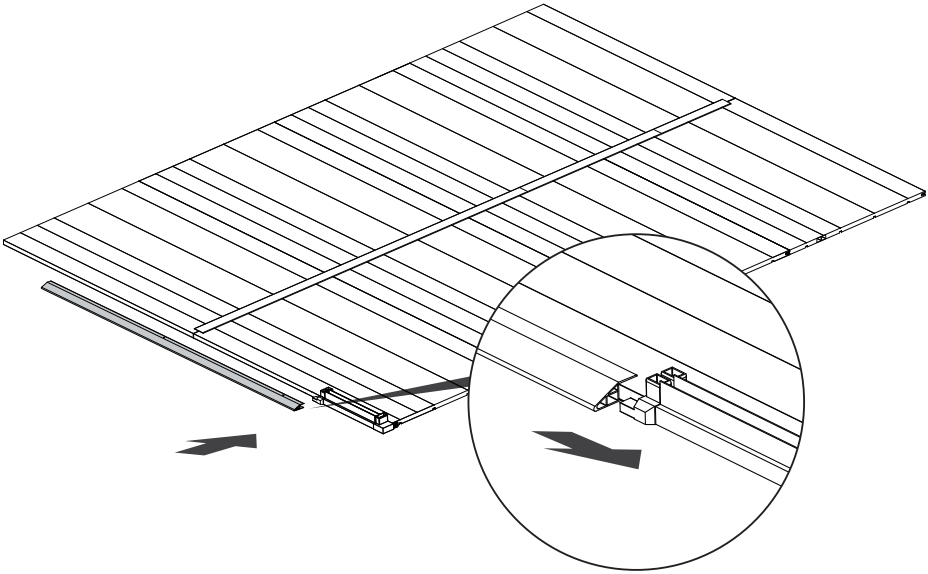

9

C7 (x1)

Cork Hammer

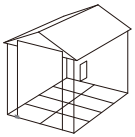

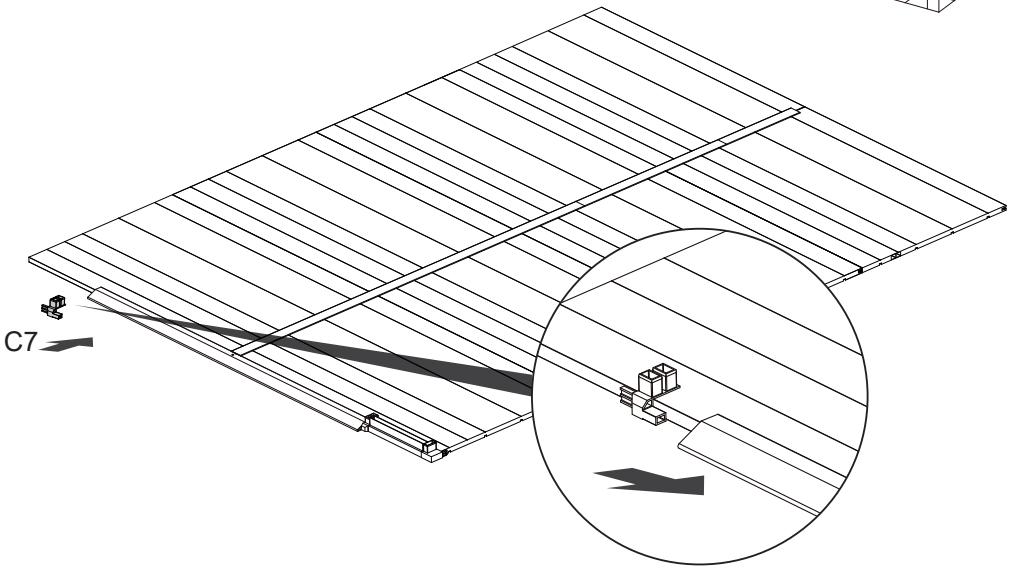

10

B8 (x1)

Cork Hammer

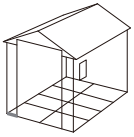

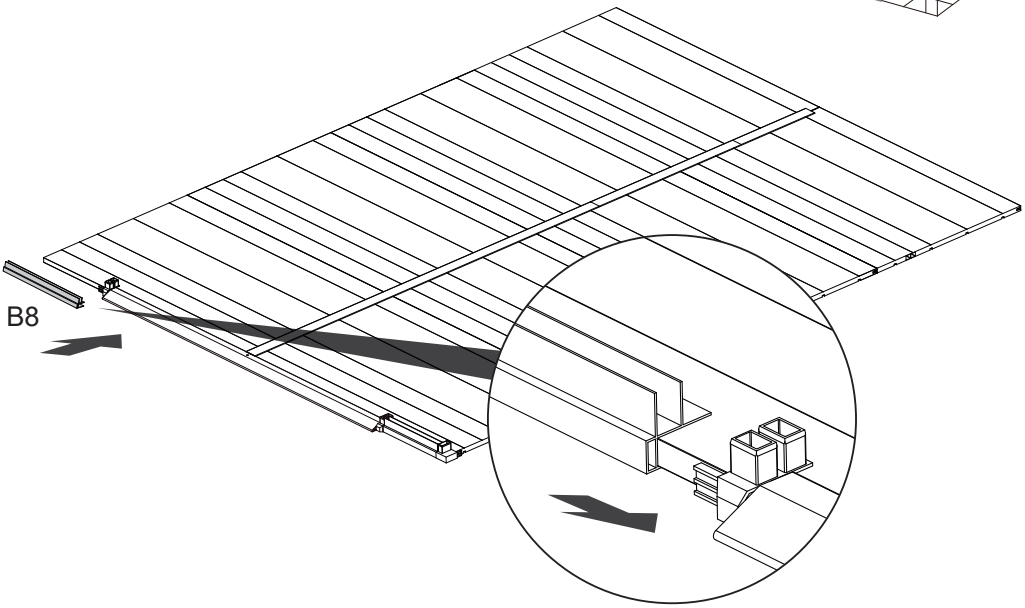

11

C9 (x1)

Cork Hammer

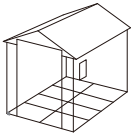

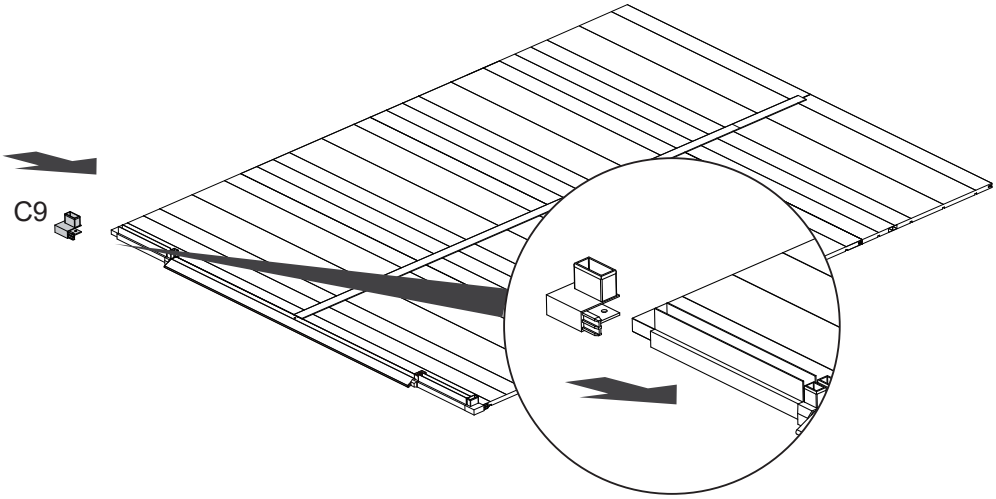

12

Φ5X16
D65/D88 (x12)

Electric Drill

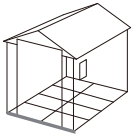

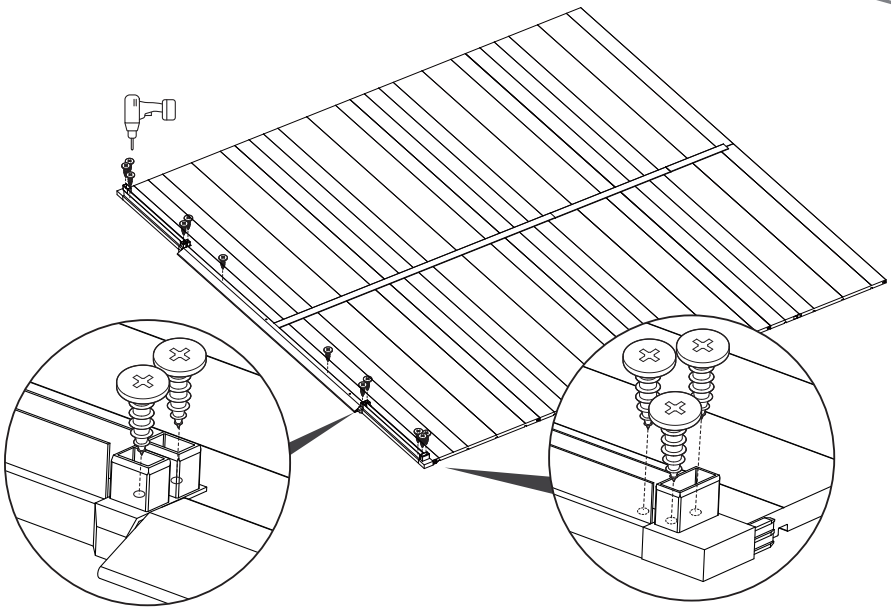

13

B10(x2)

Cork Hammer

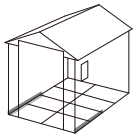

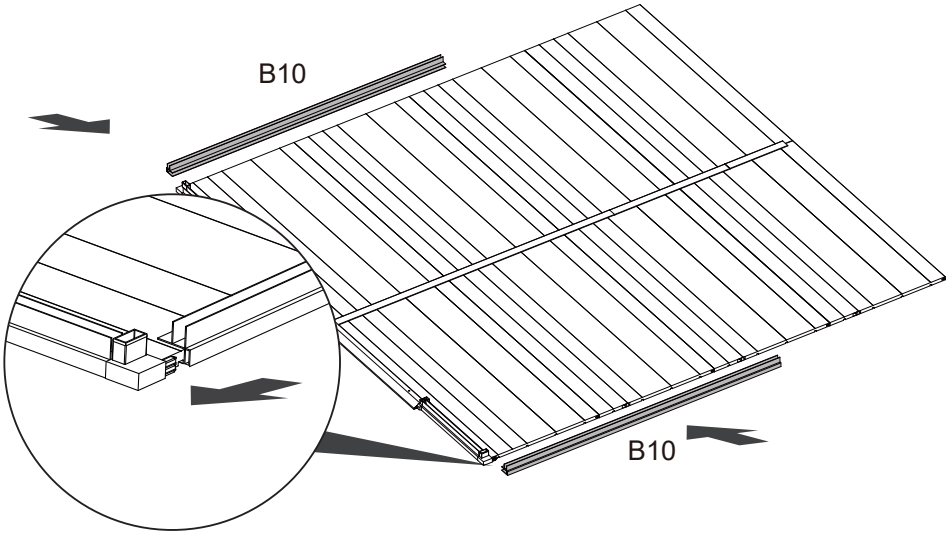

14

B73(x2)

Cork Hammer

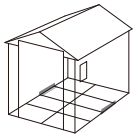

8x8 Usage B73(X2)

8x10 Usage B73(X4)

8x12 Usage B73(X6)

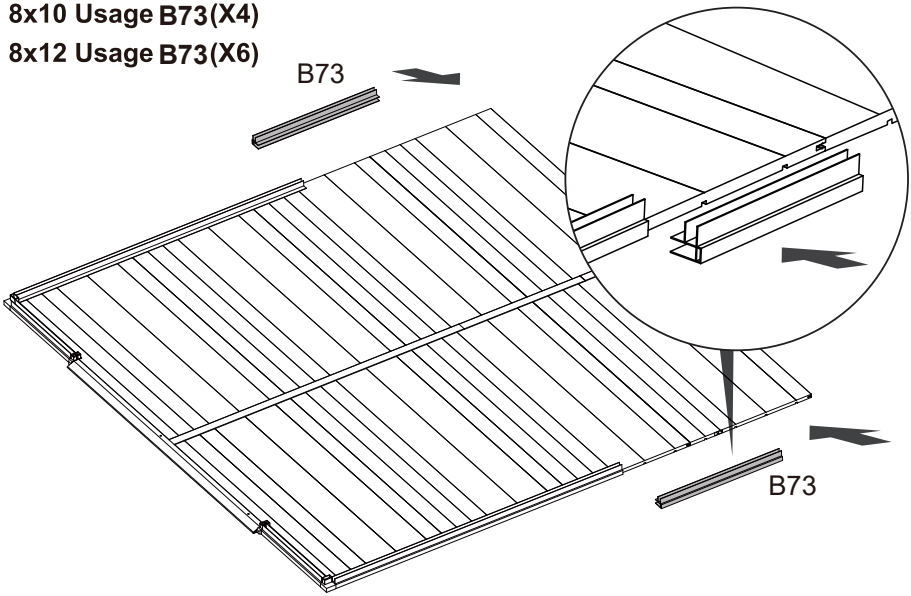

15

B11 (x2)

Cork Hammer

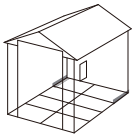

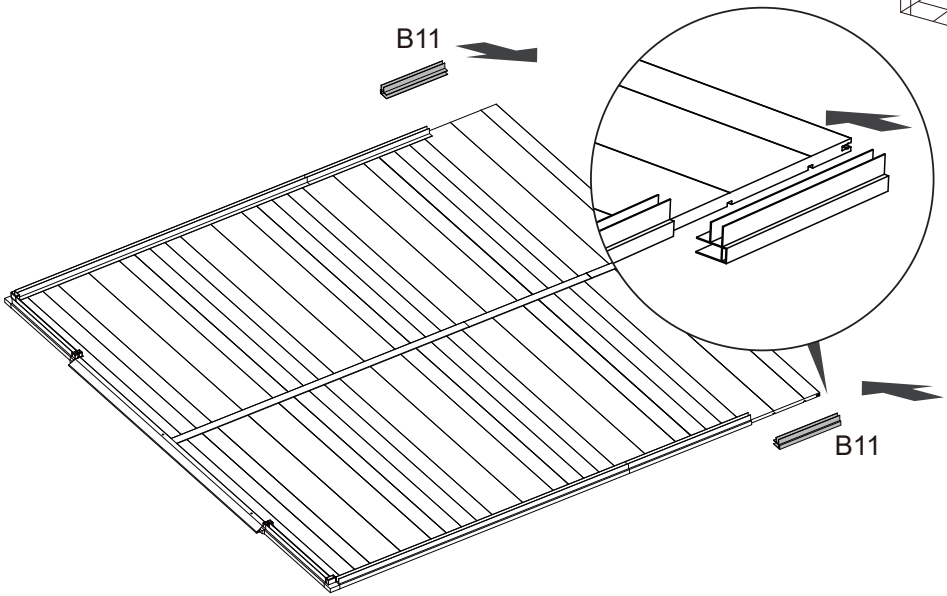

16

C9 (x2)

Cork Hammer

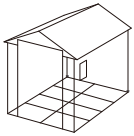

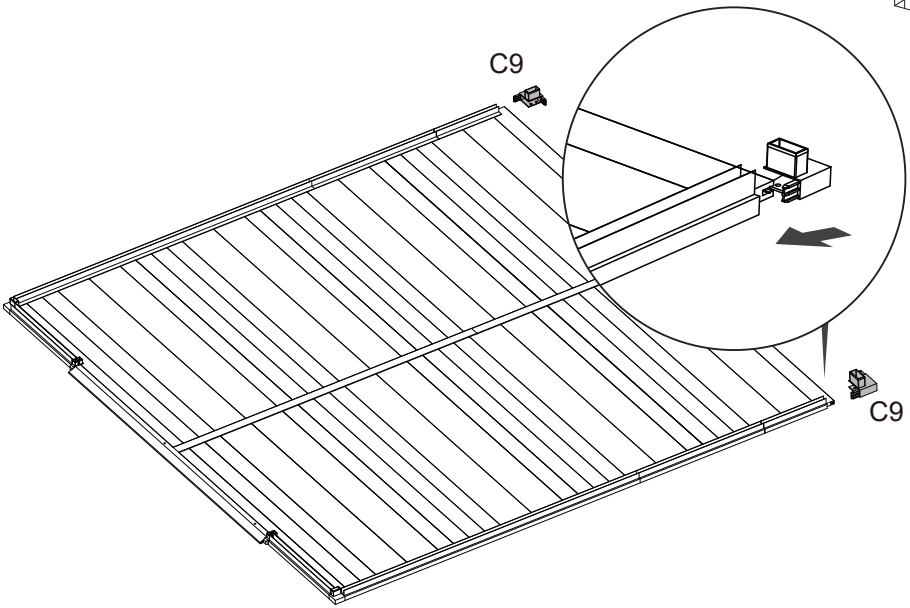

17

Φ5X16
D65/D88 (x24)

Electric
Drill

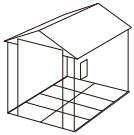

8x8 Usage D65/D88(X24)
8x10 Usage D65/D88(X28)
8x12 Usage D65/D88(X32)

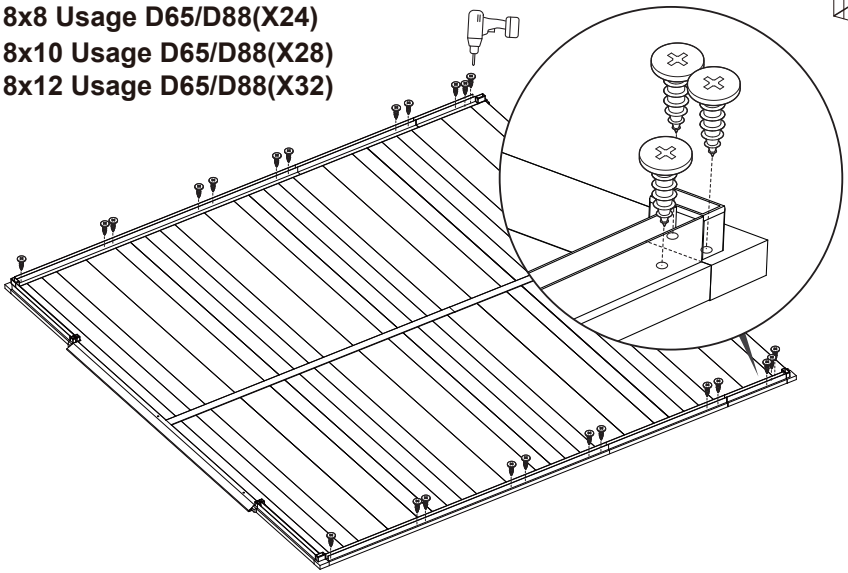

18

B8 (x2)

Cork
Hammer

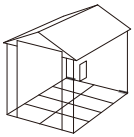

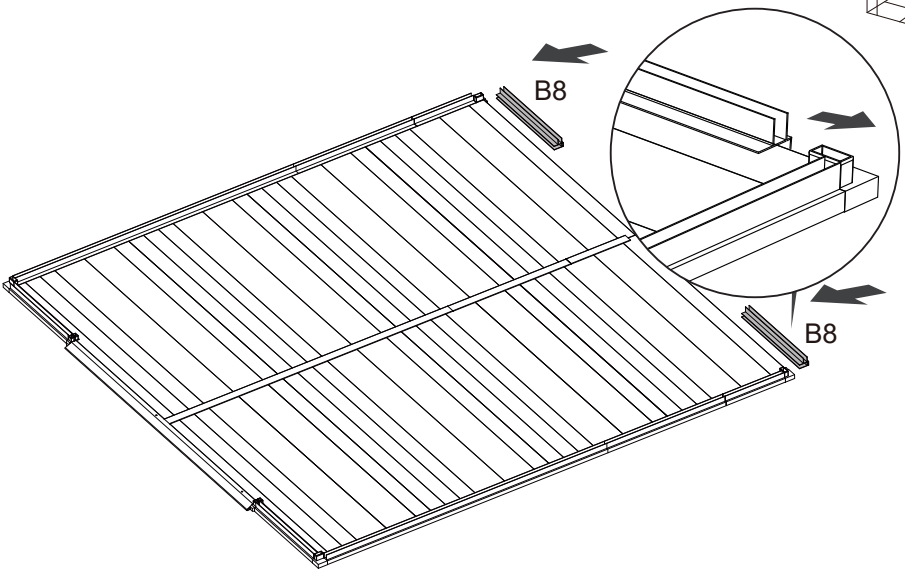

19

B12(x1)

Cork Hammer

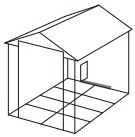

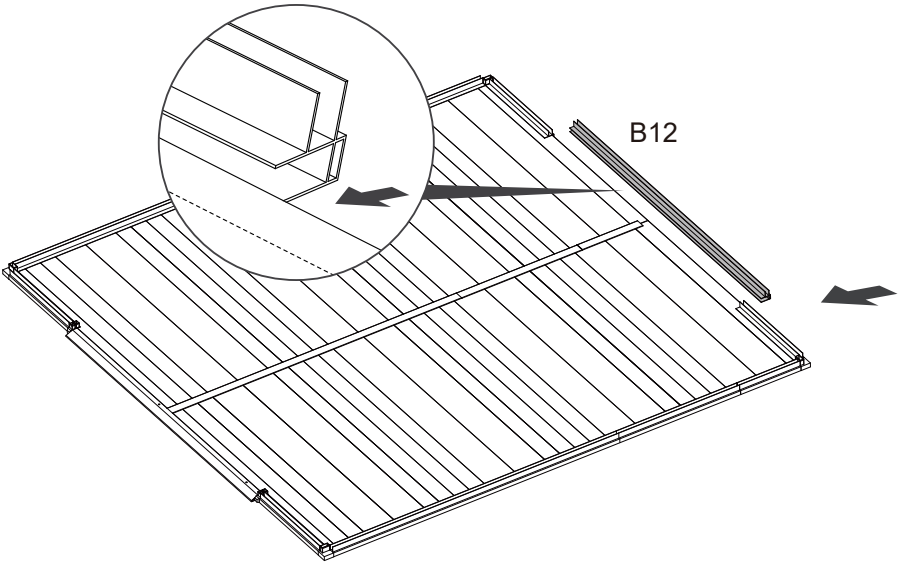

20

Φ5X16
D65/D88 (x9)

Electric Drill

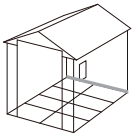

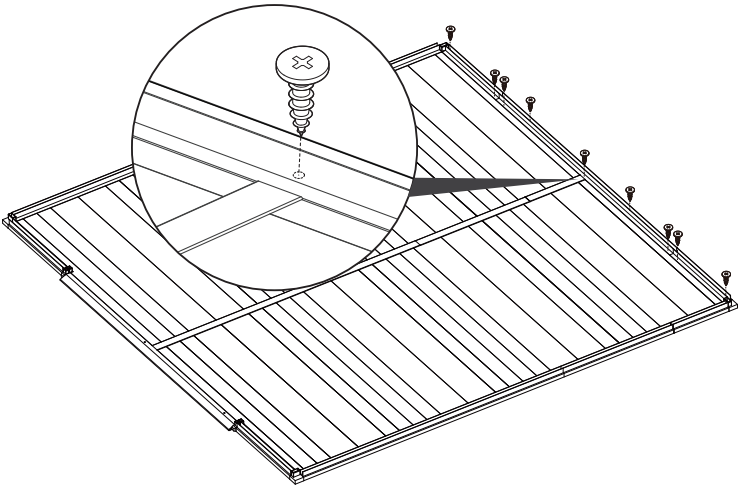

21


B13(x1)


B14(x1)


Cork Hammer

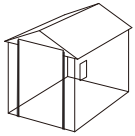

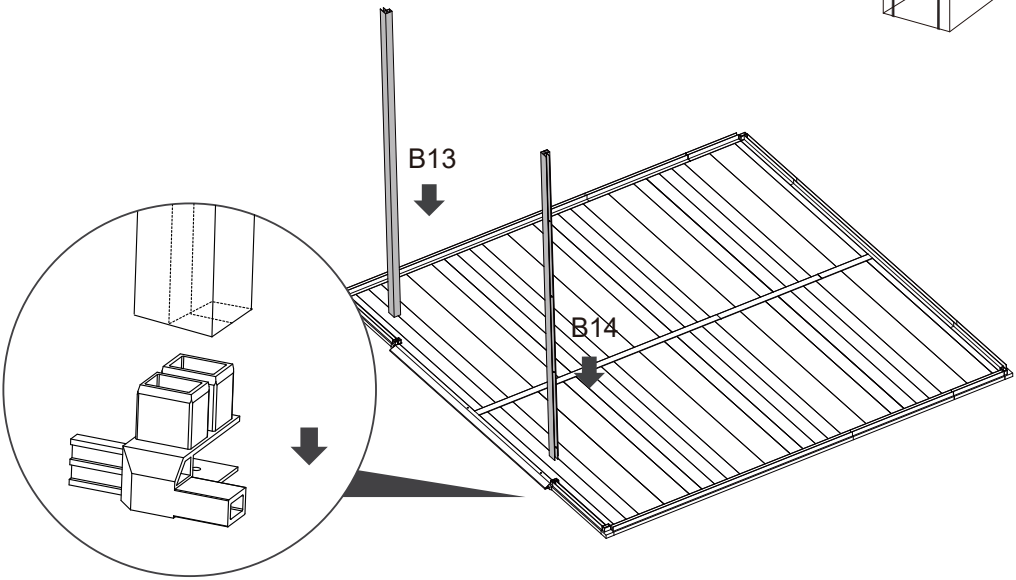

22


B20 (x1)

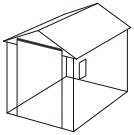

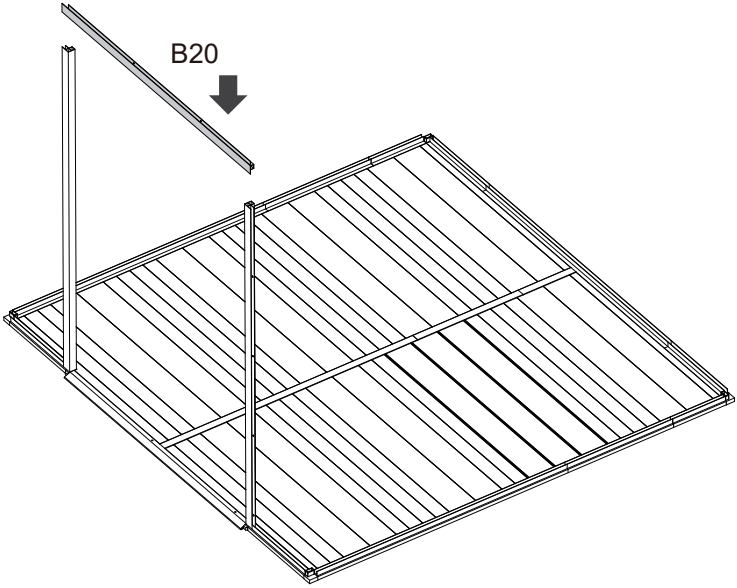

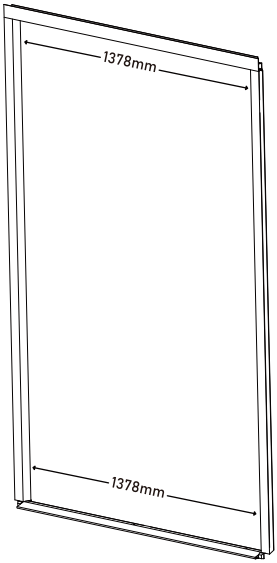

BE CAREFUL

The spacing between the bottom and top should be kept the same, with a spacing of 1378mm

23

B15 (x2)

Cork Hammer

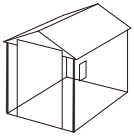

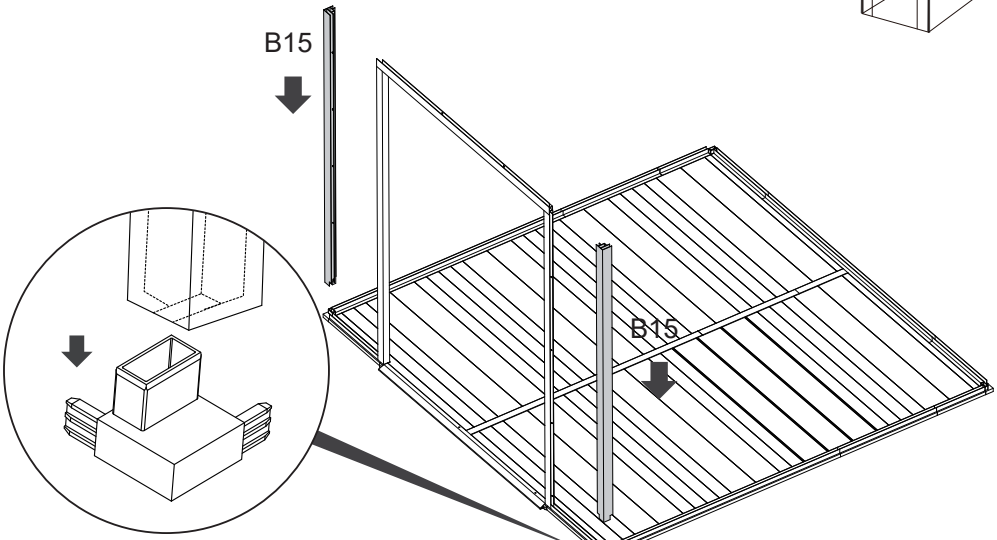

We recommend snap in the slot on the outside.

24

A16(x1) A17(x1) Cork Hammer Tape measure

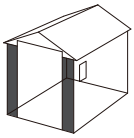

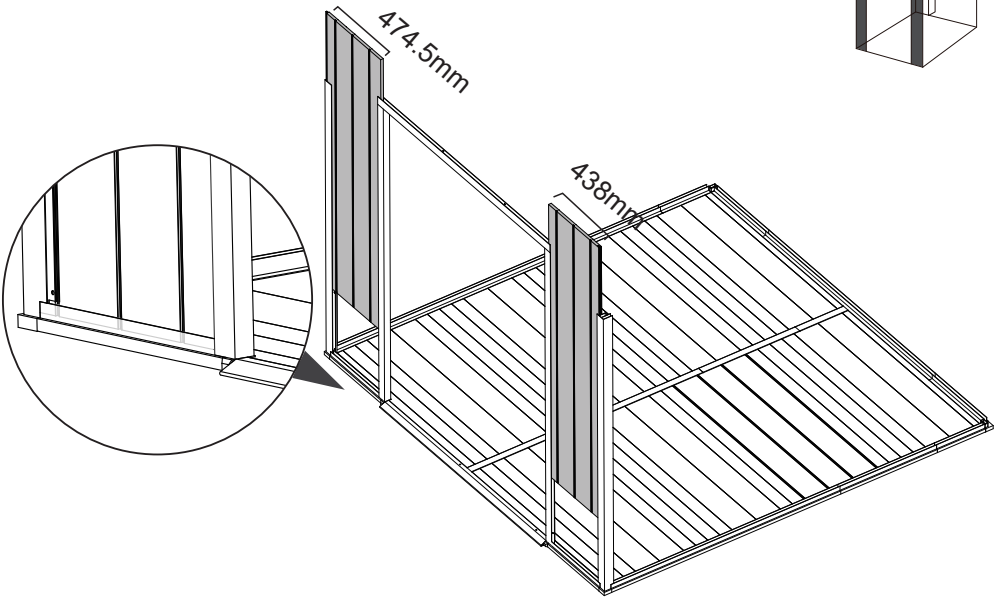

25

B18(x1) B19 (x1)

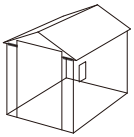

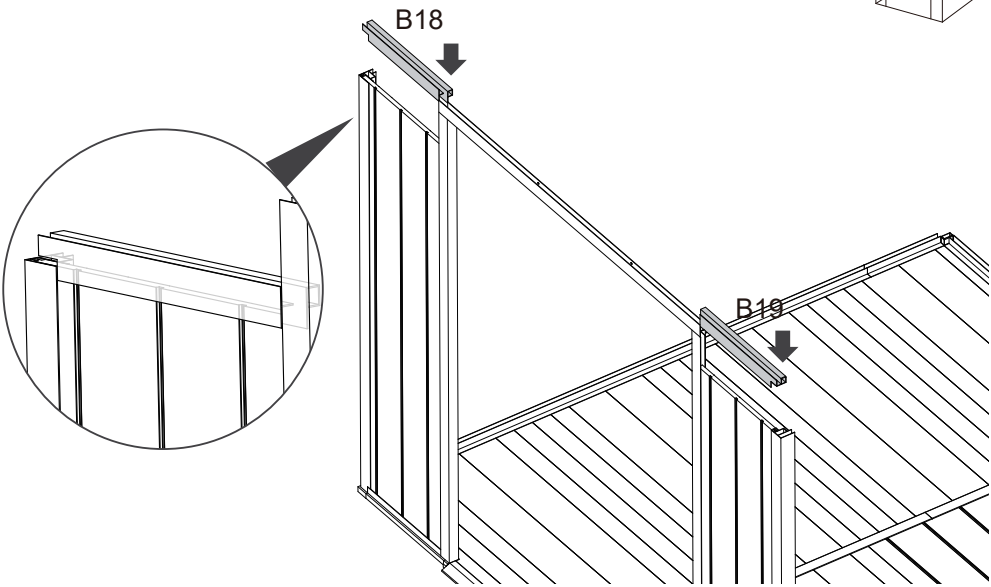

26

D21 (x2) Φ4X16 D68 (x12) Electric Drill

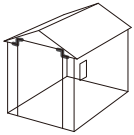

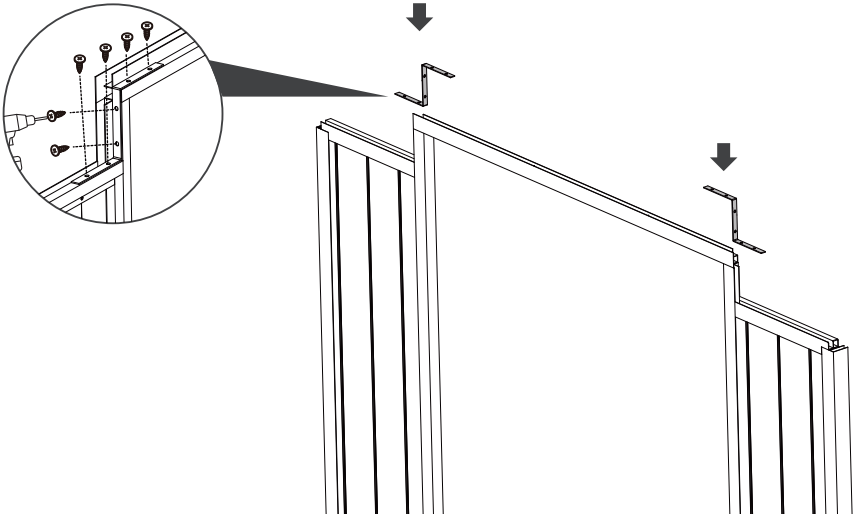

27

A22(x1) A23 (x2) A74 (x1) B15 (x1) Cork Hammer

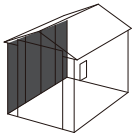

8x8 Usage A74(X1)

8x10 Usage A74(X2)

8x12 Usage A74(X3)

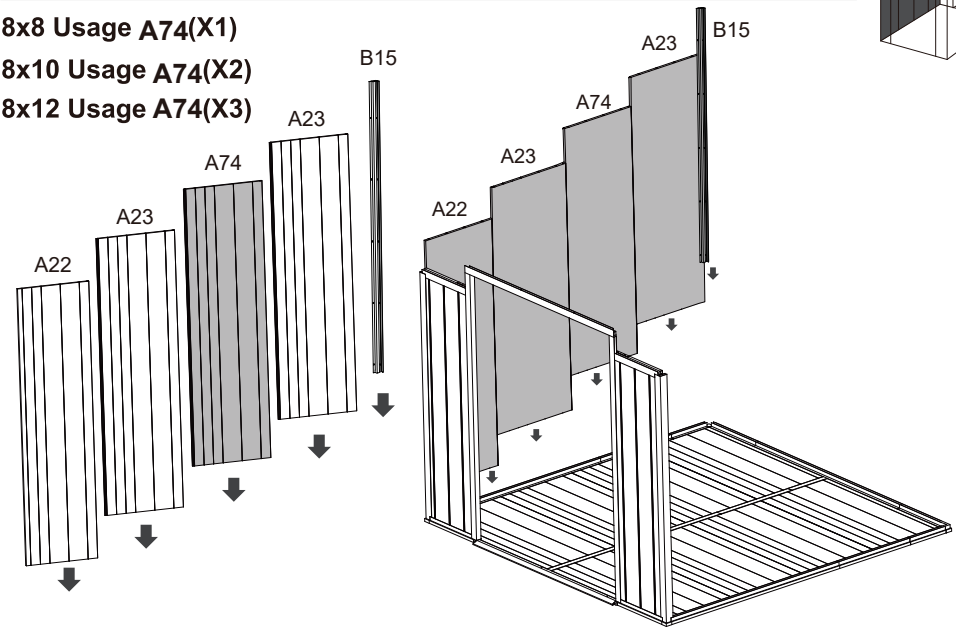

28


Φ5X16
D65/D88(x14)


Electric
Drill

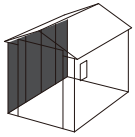

8x8 Usage D65/D88(X14)
8x10 Usage D65/D88(X16)
8x12 Usage D65/D88(X18)

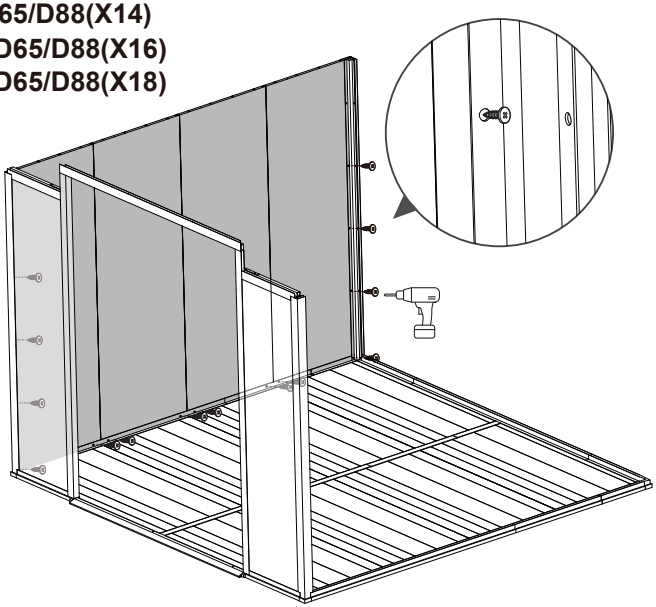

29


A23(x4)


B15 (x1)


Cork
Hammer

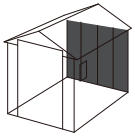

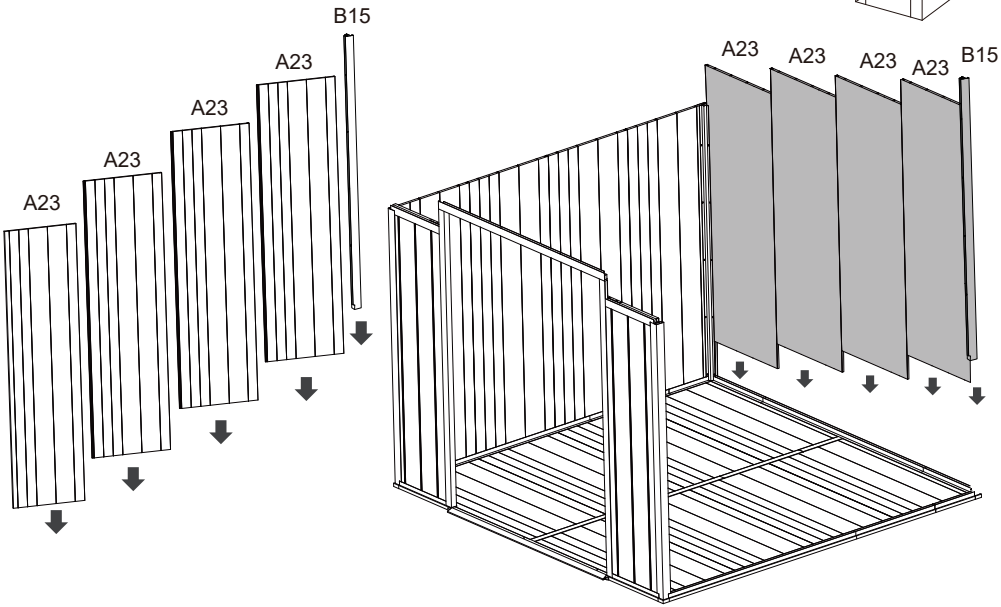

30


Φ5X16
D65/D88(x14)


Electric
Drill

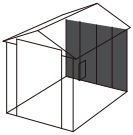

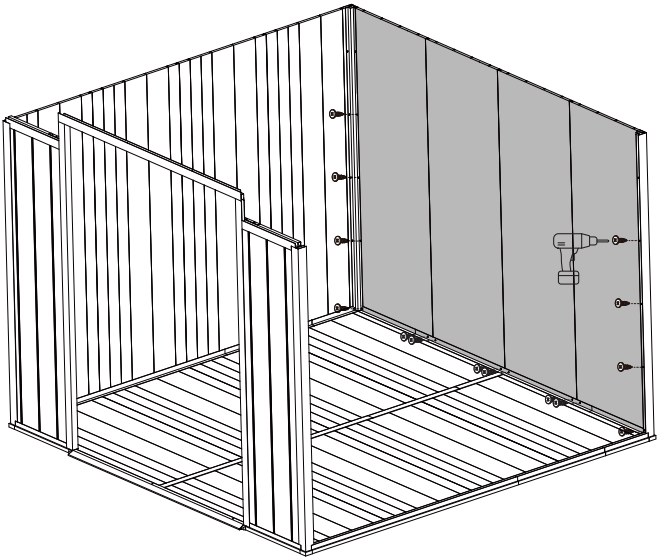

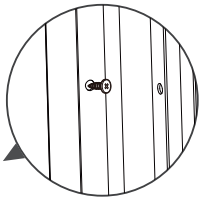

31


A24(x1)


A23(x1) A25(x1) A74 (x1)


Cork
Hammer

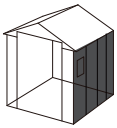

8x8 Usage A74(X1)

8x10 Usage A74(X2)

8x12 Usage A74(X3)

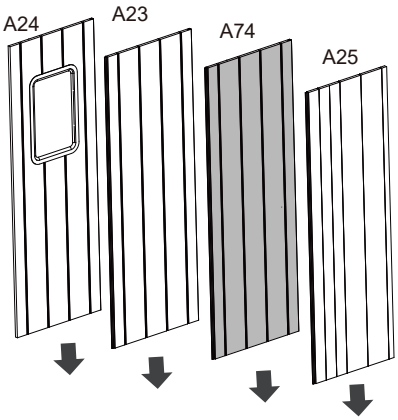

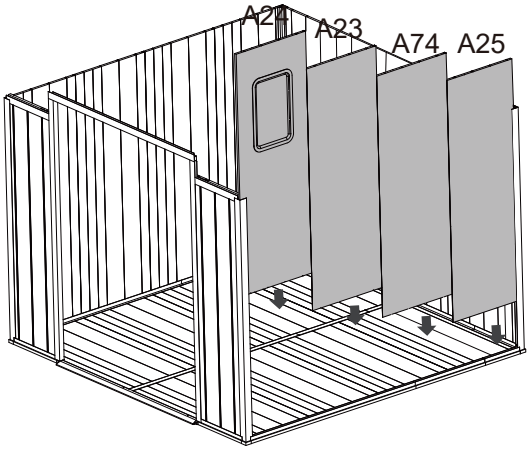

32

Φ5X16
D65/D88 (x14)

Electric
Drill

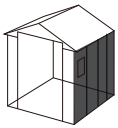

8x8 Usage D65(X14)
8x10 Usage D65(X16)
8x12 Usage D65(X18)

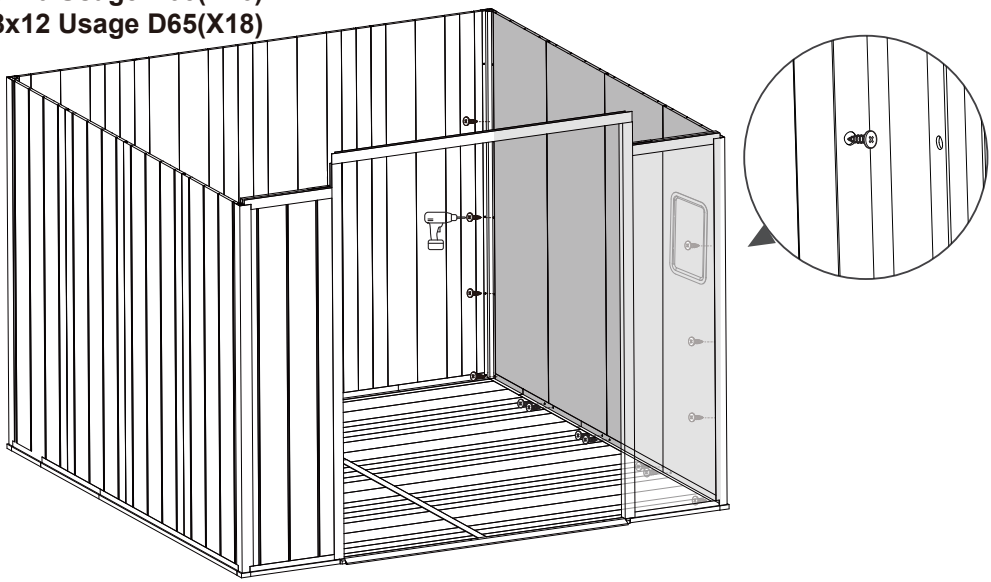

33

B26(x1) B27 (x1) B28(x1) Ladder

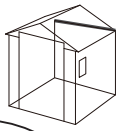

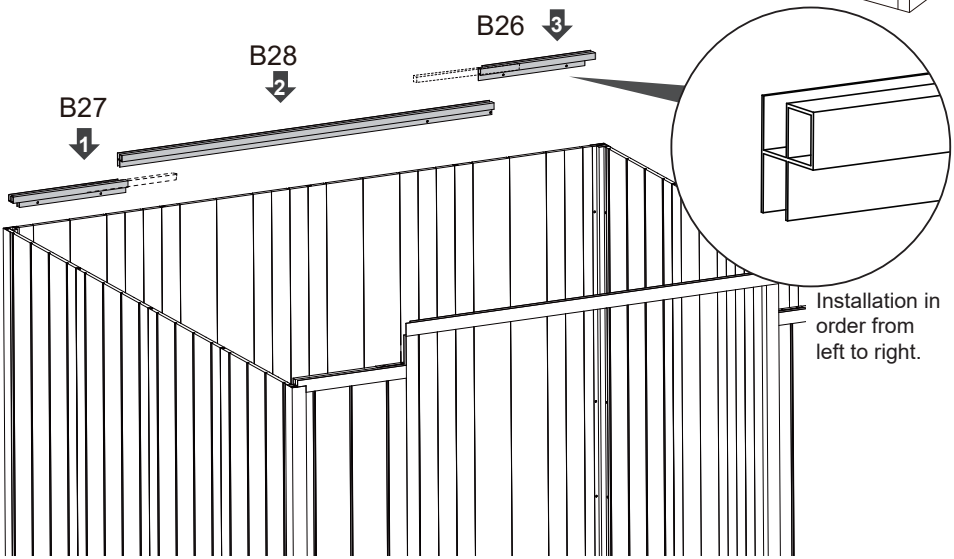

Installation in order from left to right.

34

Φ4X16
D68(x12)

Electric Drill

Ladder

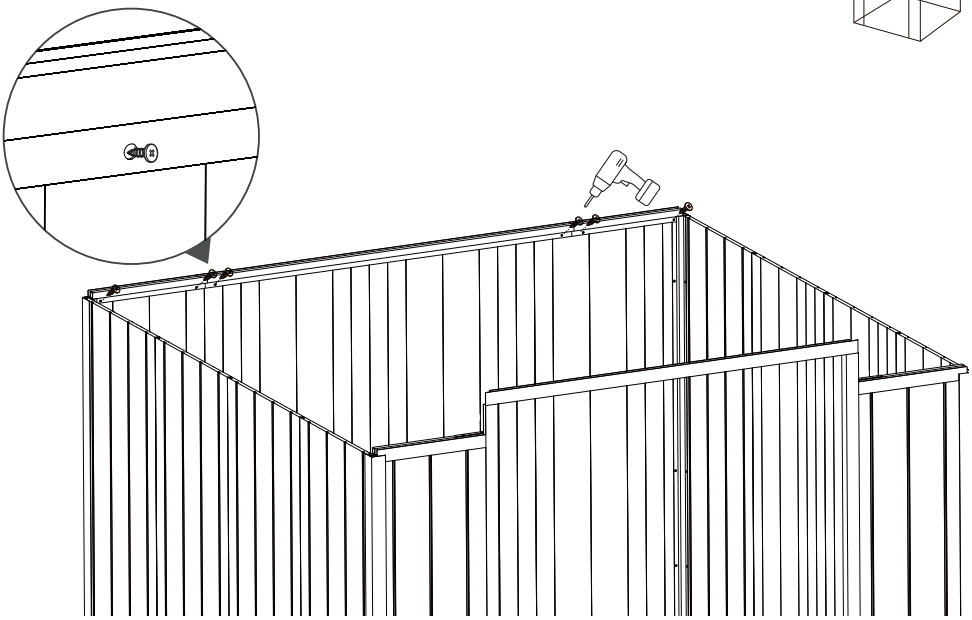

35

B29(x1)

B31(x1)

B75(x1)

Cork Hammer

Ladder

8x8 Usage B75(X1)

8x10 Usage B75(X2)

8x12 Usage B75(X3)

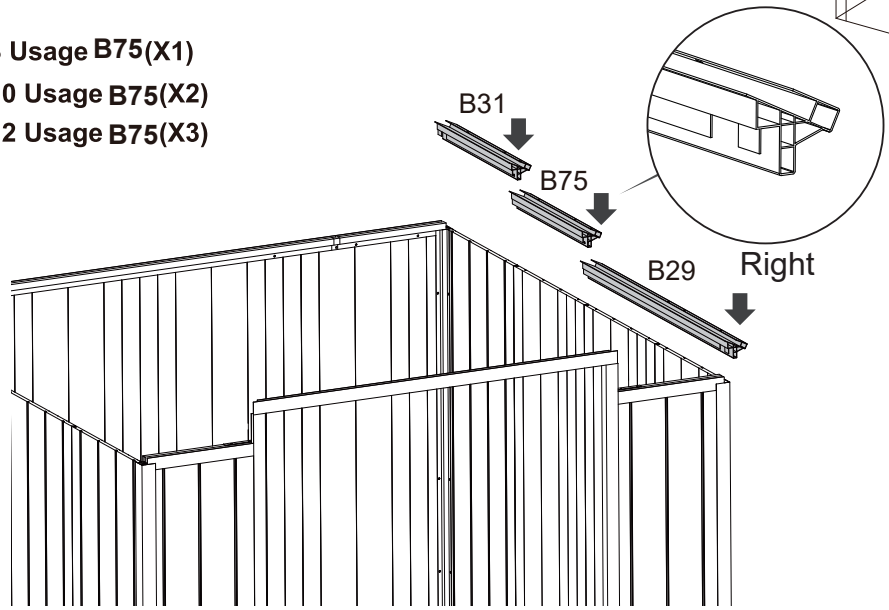

36

B30(x1) B32 (x1) B75 (x1) Cork Hammer Ladder

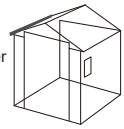

8x8 Usage B75(X1)

8x10 Usage B75(X2)

8x12 Usage B75(X3)

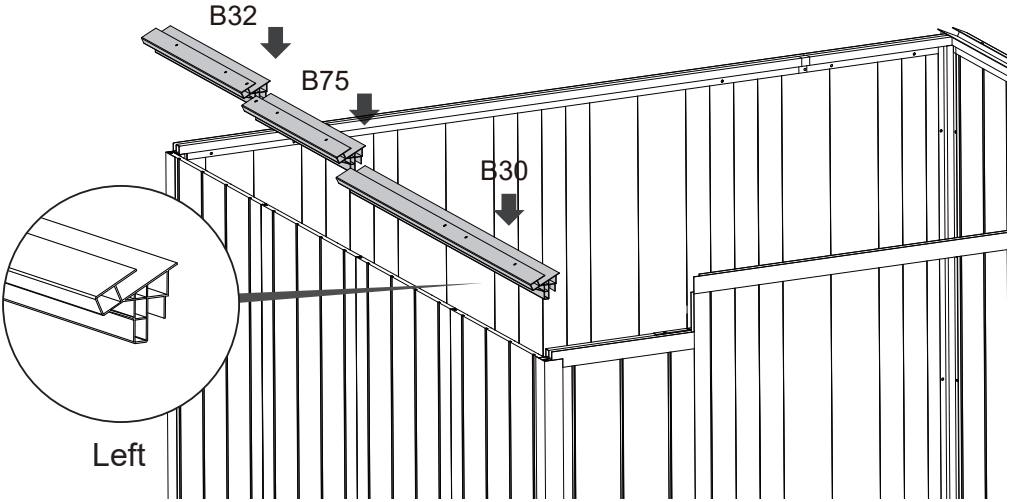

37

D33(x4) Ladder

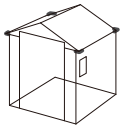

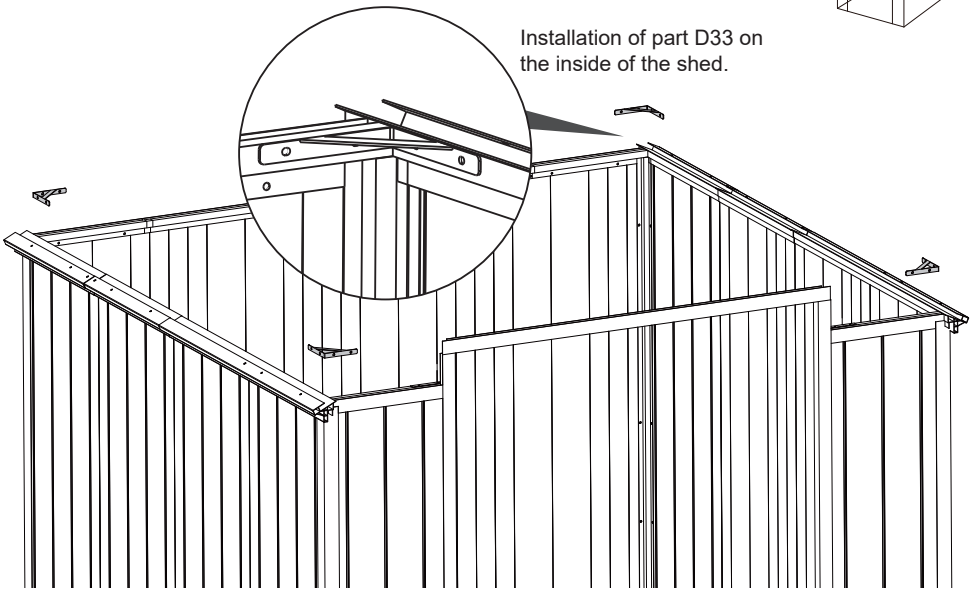

38

Φ4X16
D68(x16)

Electric Drill

Ladder

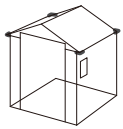

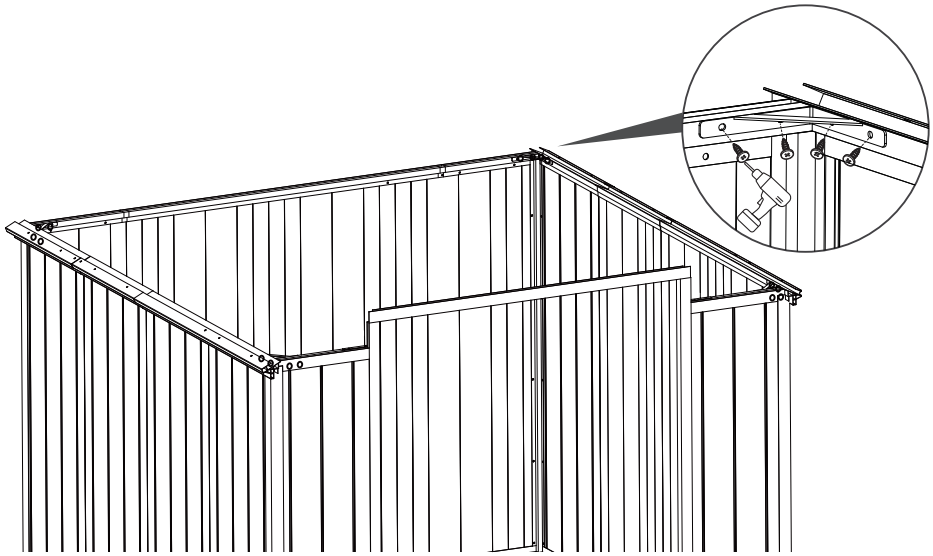

39

D34/D76(x6) D35/D77 (x6) D69 (X1)

Ladder

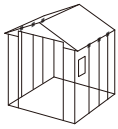

8x8 Usage D34/D76 (X6) D35/D77 (X6)

8x10 Usage D34/D76 (X8) D35/D77 (X8)

8x12 Usage D34/D76 (X10) D35/D77 (X10)

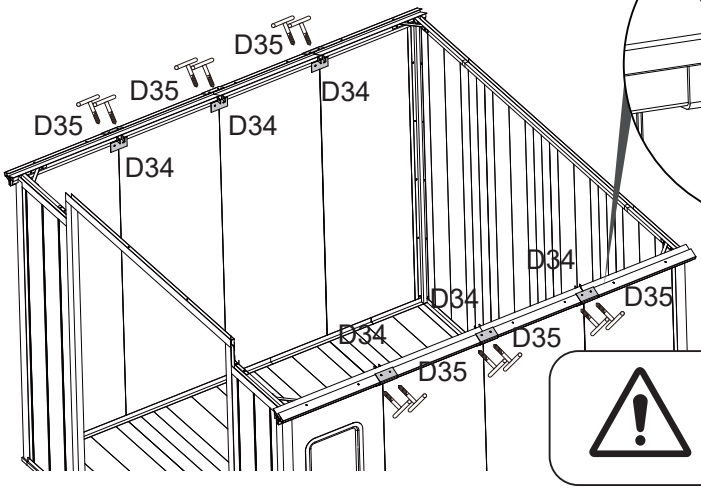

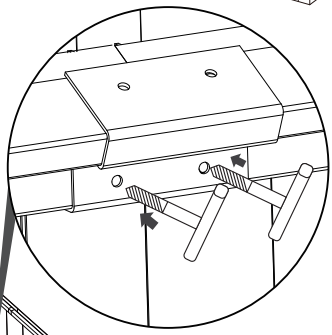

Manually drill screw holes

BE CAREFUL

The hole should be drilled between two plates

40

D64/D87(x12) Ladder Small Wrench Allen key

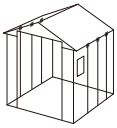

8x8 Usage D64/D87(X12)
8x10 Usage D64/D87(X16)
8x12 Usage D64/D87 (X20)

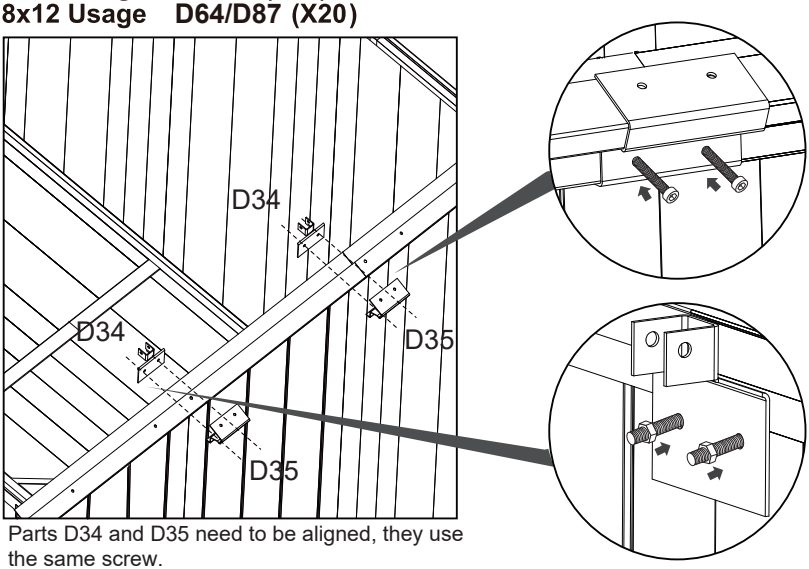

Parts D34 and D35 need to be aligned, they use the same screw.

41

D36/D78 (x6) D39/D81(x3) D64/D87(x12) Small Wrench Allen key

8x8 Usage D36/D78 (X6) D39/D81(X3) D64/D87(X12)
8x10 Usage D36/D78 (X8) D39/D81(X4) D64/D87(X16)
8x12 Usage D36/D78 (X10) D39/D81 (X5) D64/D87 (X20)

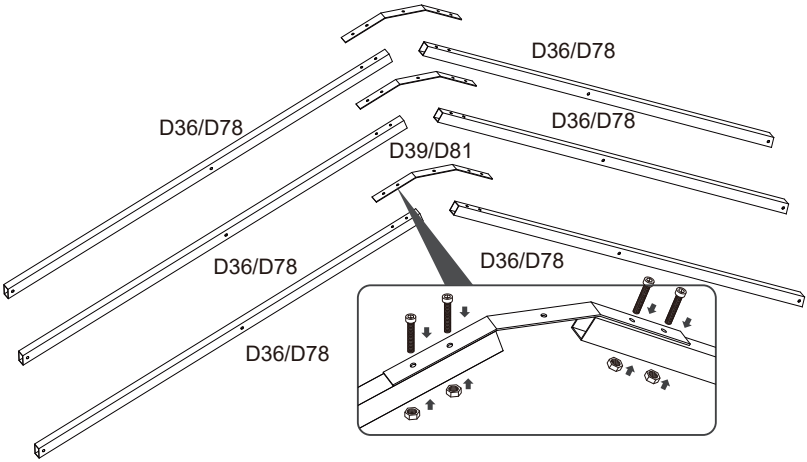

42

D38/D80 (x3) D64/D87 (x6) Small Wrench Allen key

8x8 Usage D38/D80 (X3) D64/D87 (X6)
8x10 Usage D38/D80 (X4) D64/D87 (X8)
8x12 Usage D38/D80 (X5) D64/D87 (X10)

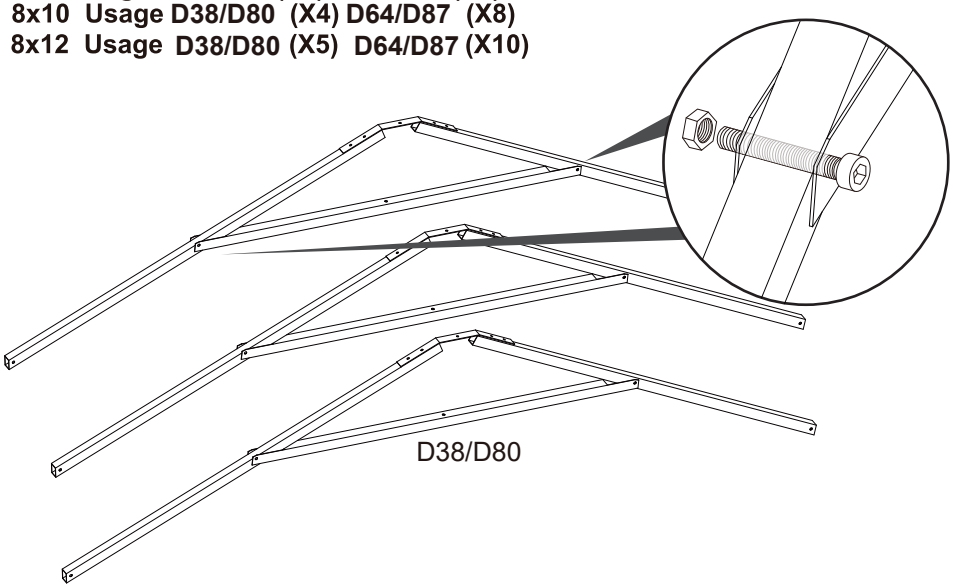

43

D64/D87 (x6) Small Wrench Allen key Ladder

8x8 Usage D64/D87 (X6)
8x10 Usage D64/D87 (X8)
8x12 Usage D64/D87 (X10)

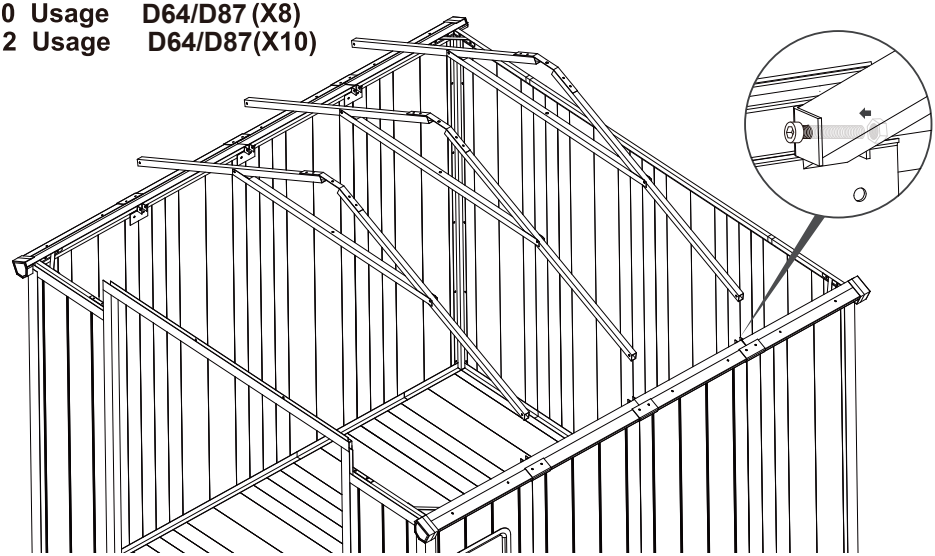

44

A44 (x1) A45 (x1) Ladder

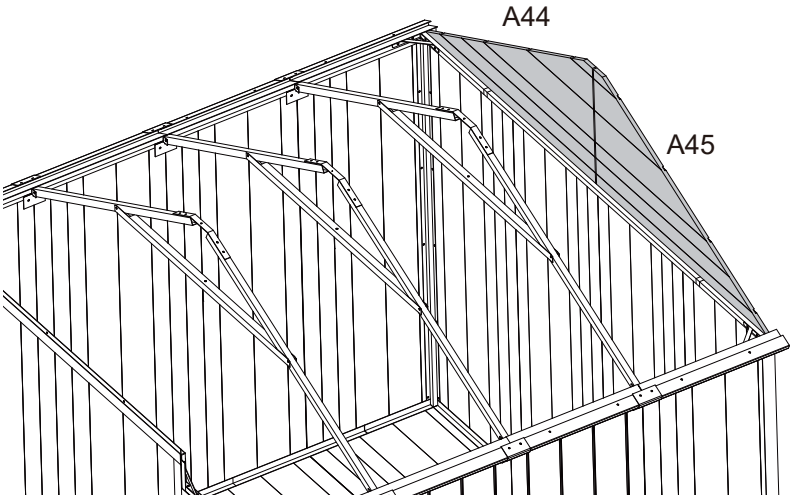

45

A46 (x1) Cork Hammer Ladder

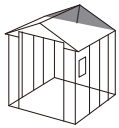

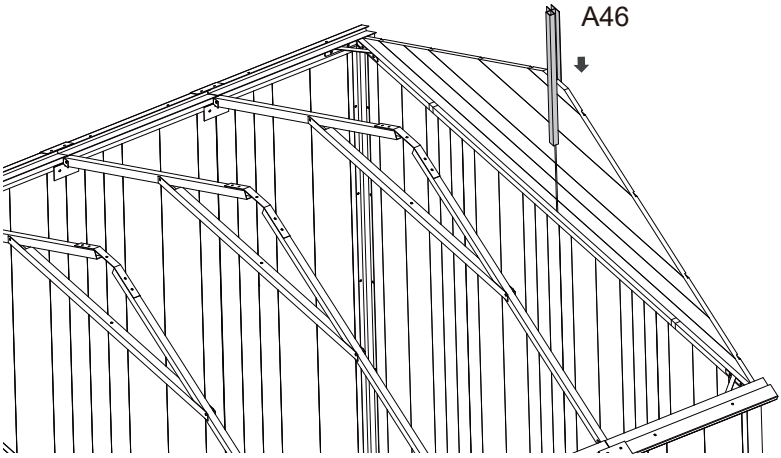

46

D65/D88(x2) Electric Drill Ladder

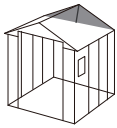

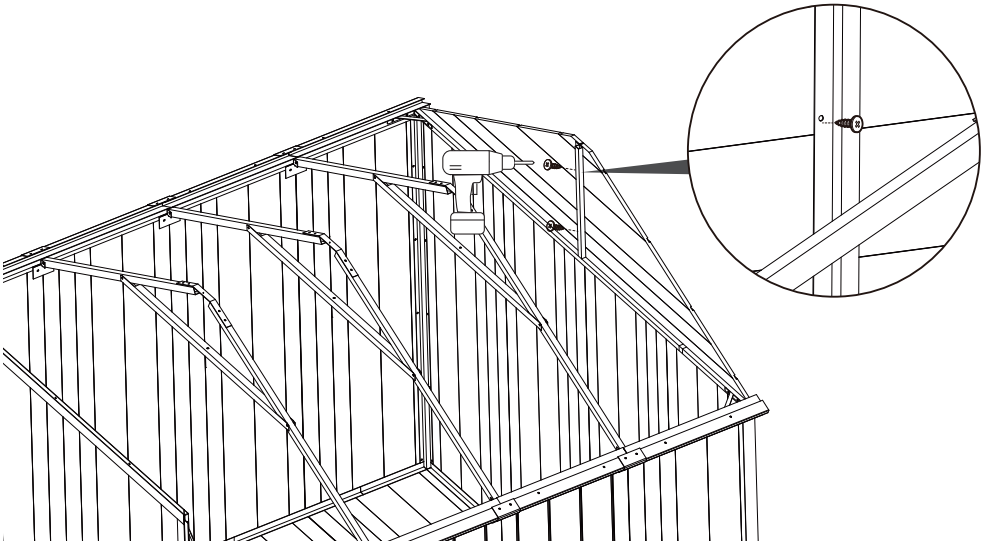

47

A43(x1) C66(x1) Φ5X16 D65 (x6) Electric Drill

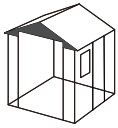

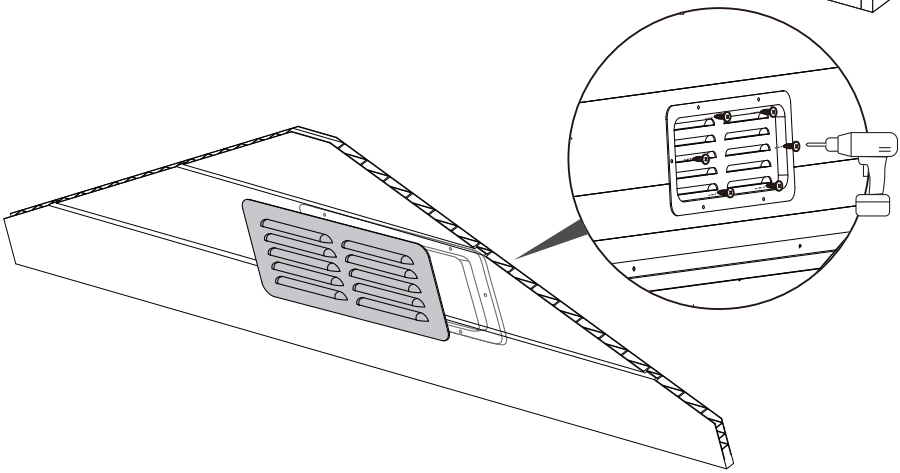

48

A41 (x1) A42(x1) A43 (x1) Ladder

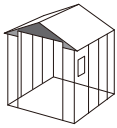

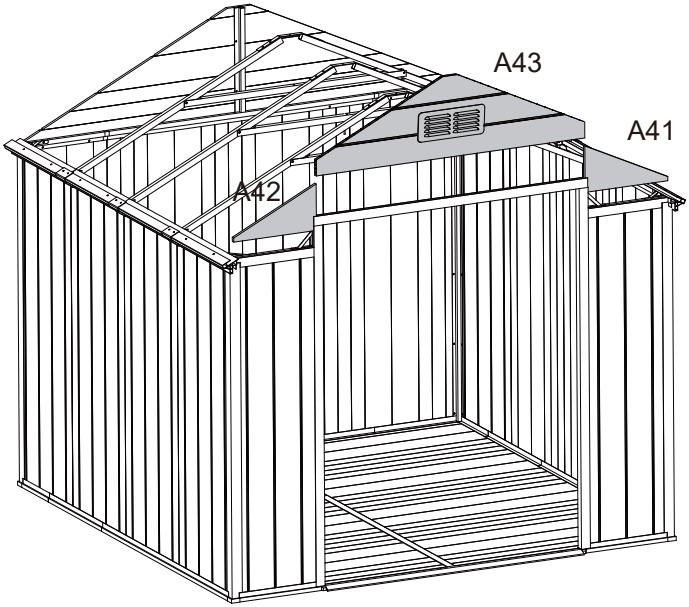

49

A47 (x1) Cork Hammer Ladder Double

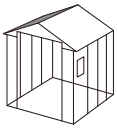

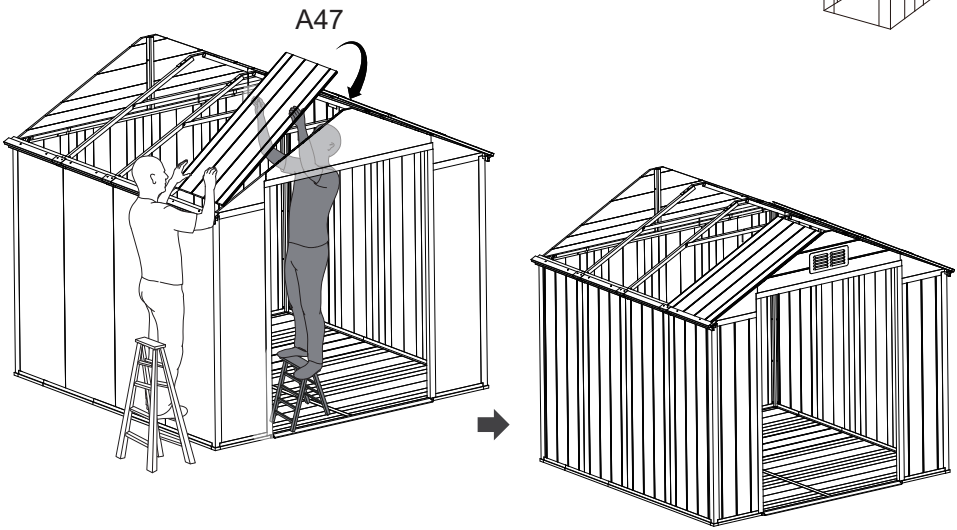

50

A48(x1) Cork Hammer Ladder Double

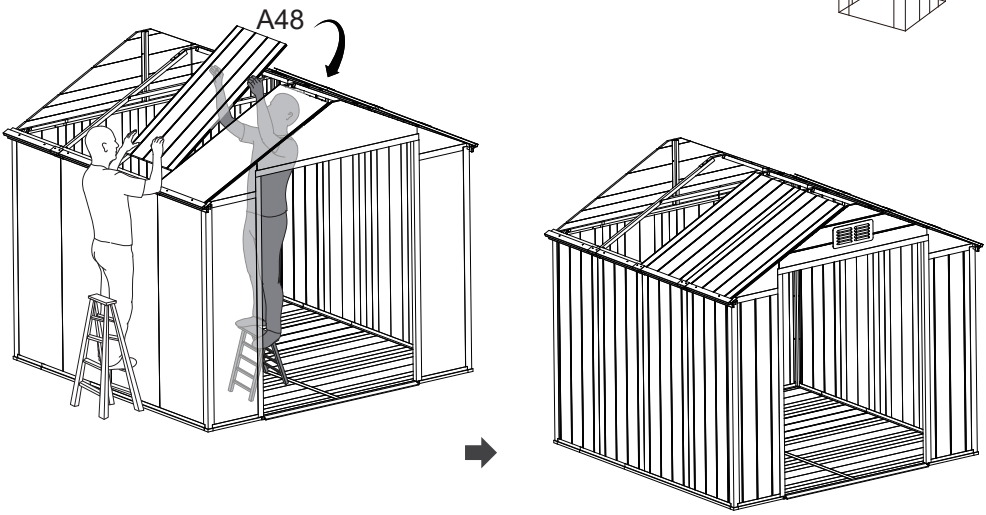

51

A83(x1) Cork Hammer Ladder Double

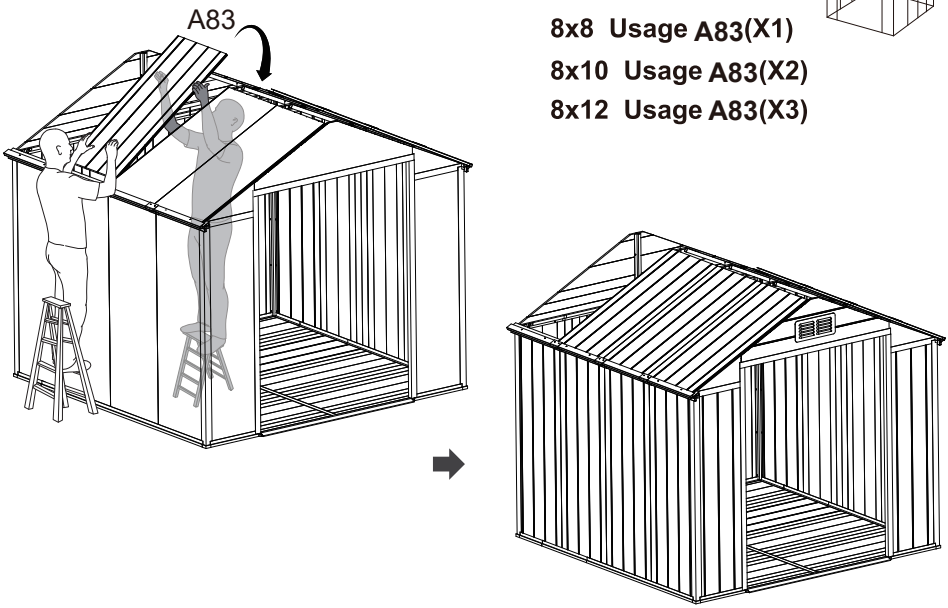

8x8 Usage A83(X1)

8x10 Usage A83(X2)

8x12 Usage A83(X3)

52

A48 (x1)

Cork Hammer

Ladder

Double

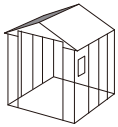

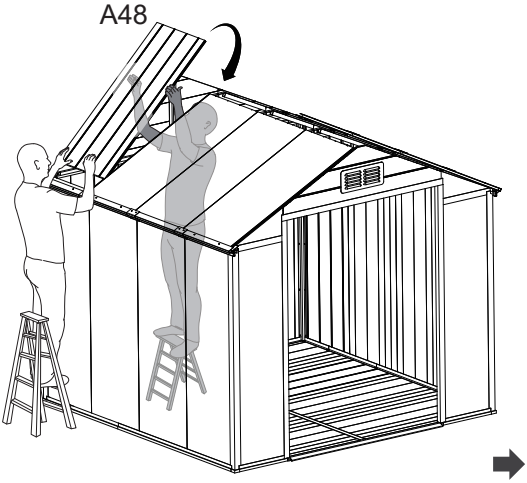

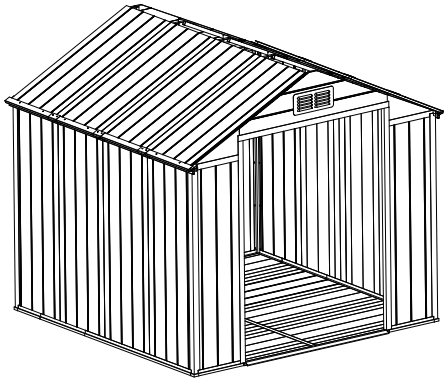

53

A47 (x1)

Cork Hammer

Ladder

Double

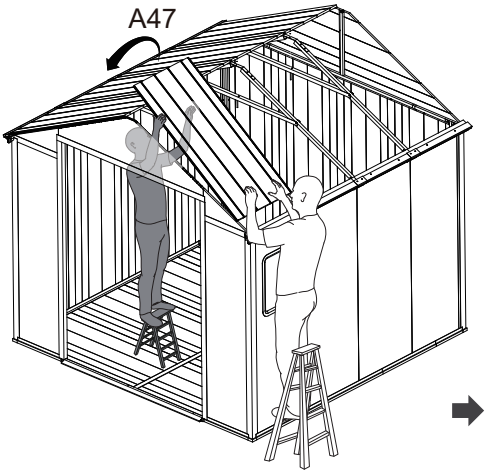

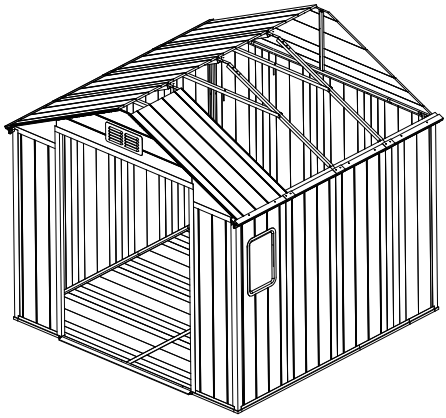

54

A48(x1)

Cork Hammer

Ladder

Double

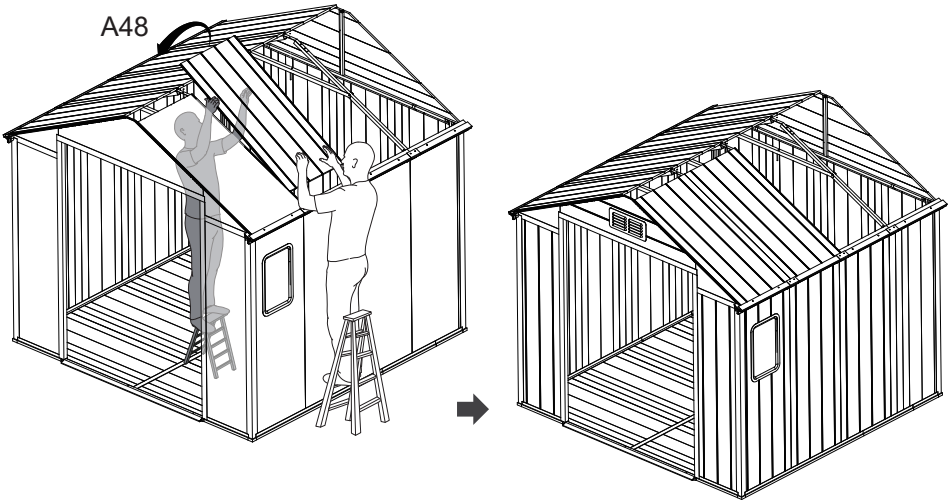

55

A83(x1)

Cork Hammer

Ladder

Double

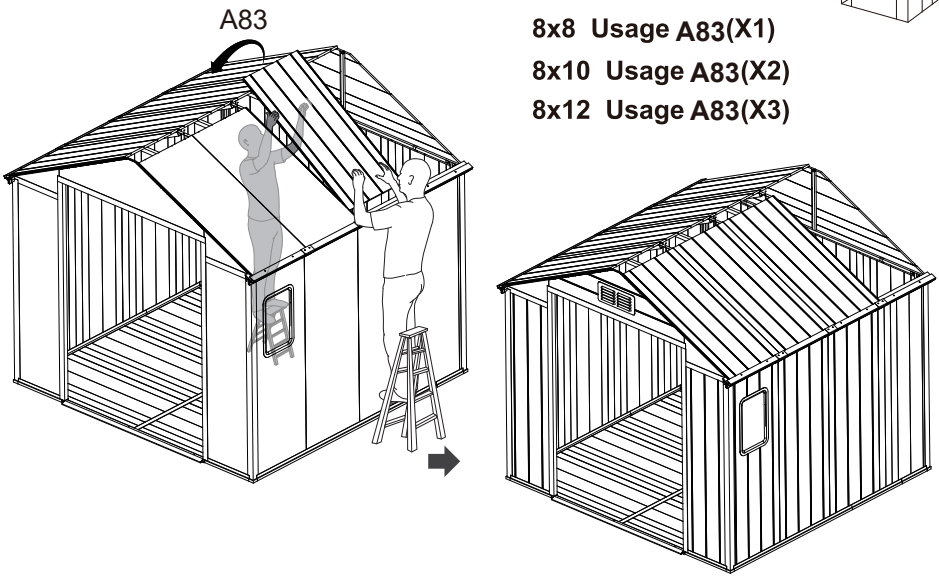

56

A48(x1) Cork Hammer Ladder Double

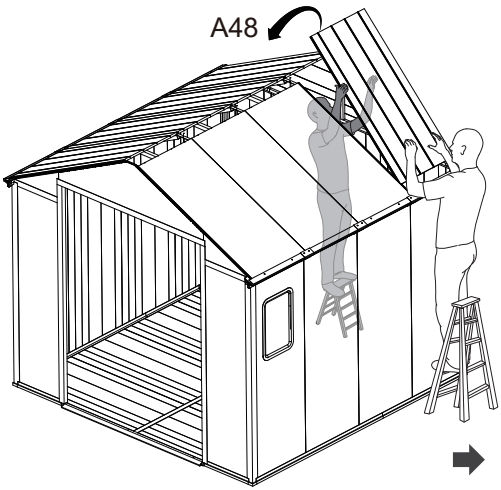

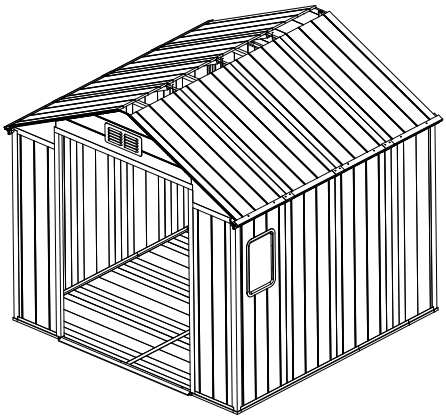

57

Φ5X16 D65/D88 (x12) Electric Drill Ladder

8x8 Usage D65/D88 (X12)

8x10 Usage D65/D88 (X16)

8x12 Usage D65/D88 (X20)

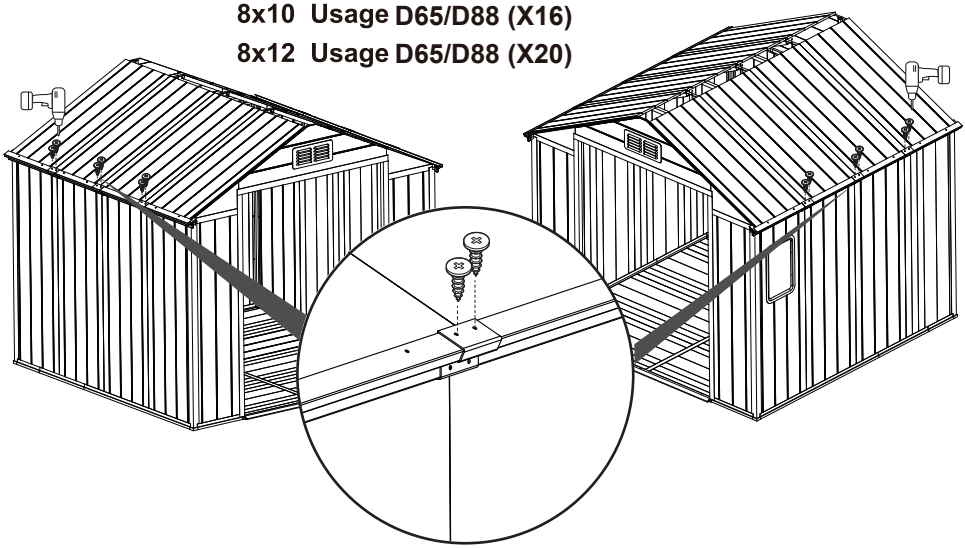

58

B49(x2) B50 (x2) B84 (x2) Cork Hammer Ladder

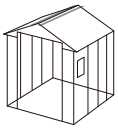

8x8 Usage B84(X2)

8x10 Usage B84(X4)

8x12 Usage B84(X6)

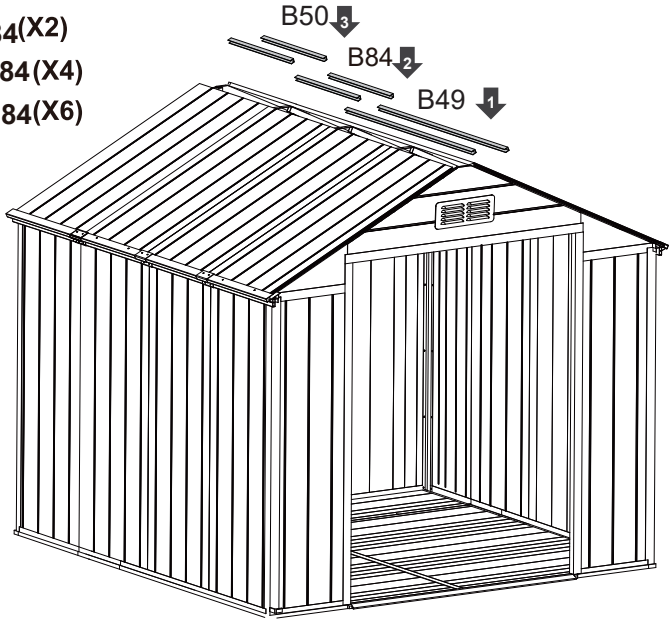

59

Φ5X16 D65/D88 (x14) Electric Drill Ladder

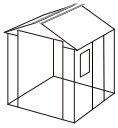

8x8 Usage D65/D88 (X14)

8x10 Usage D65/D88 (X18)

8x12 Usage D65/D88 (X22)

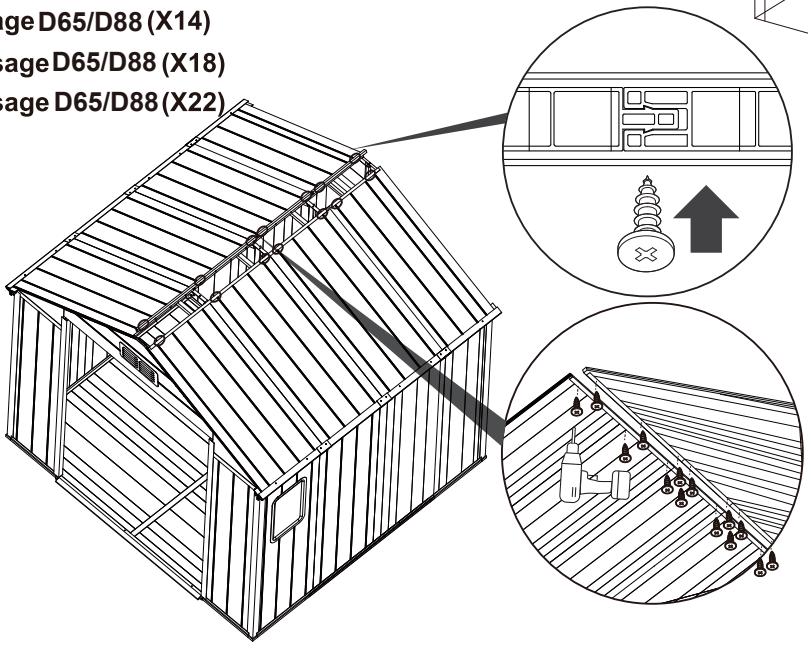

60


B51(x2)


B52(x2)


Cork Hammer


Ladder

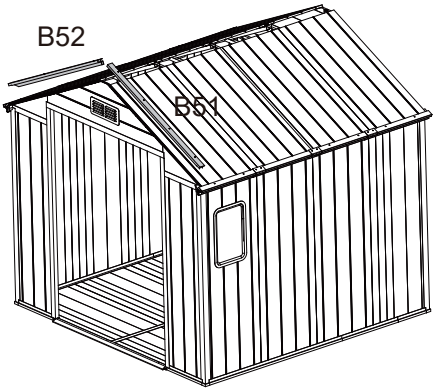

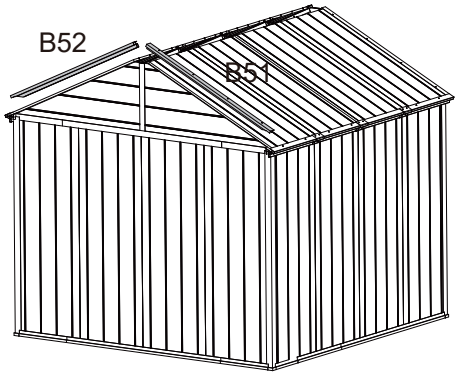

61


Φ5X16
D65/D88(x16)


Electric Drill


Ladder

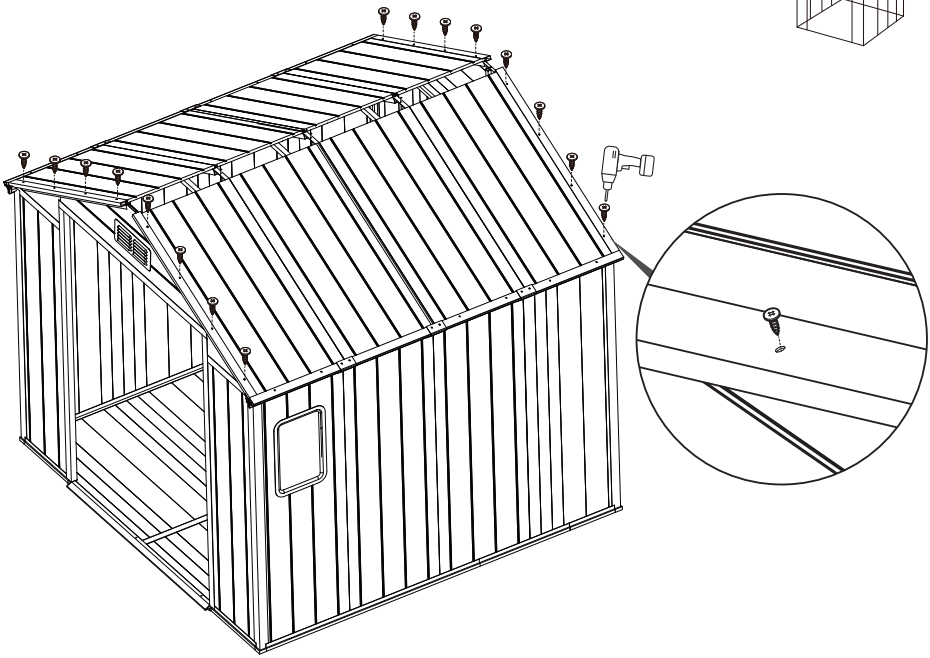

62

C53 (x2) C54 (x2) Cork Hammer Ladder

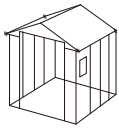

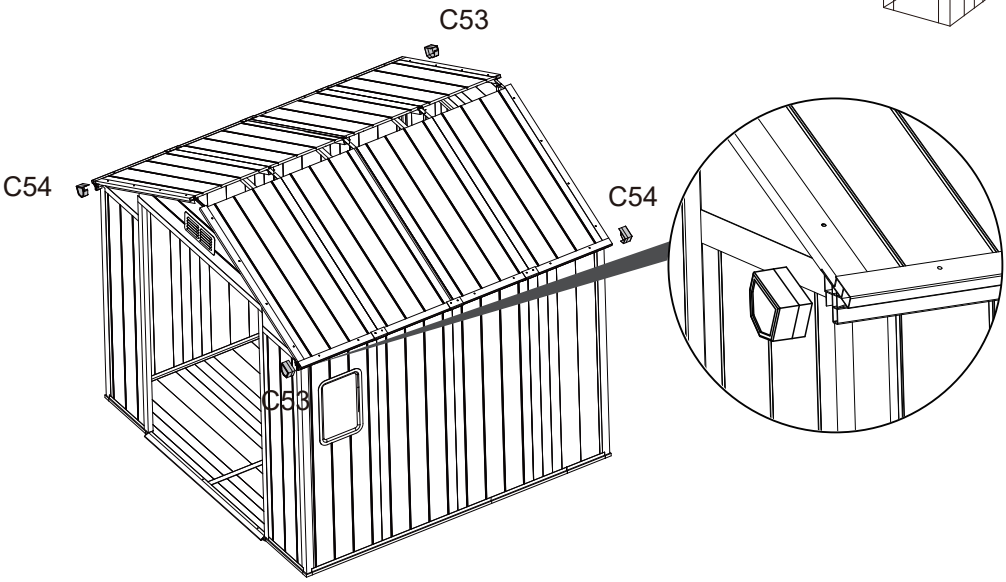

63

Φ5X16
D65/D88 (x4) Electric Drill Ladder

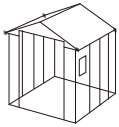

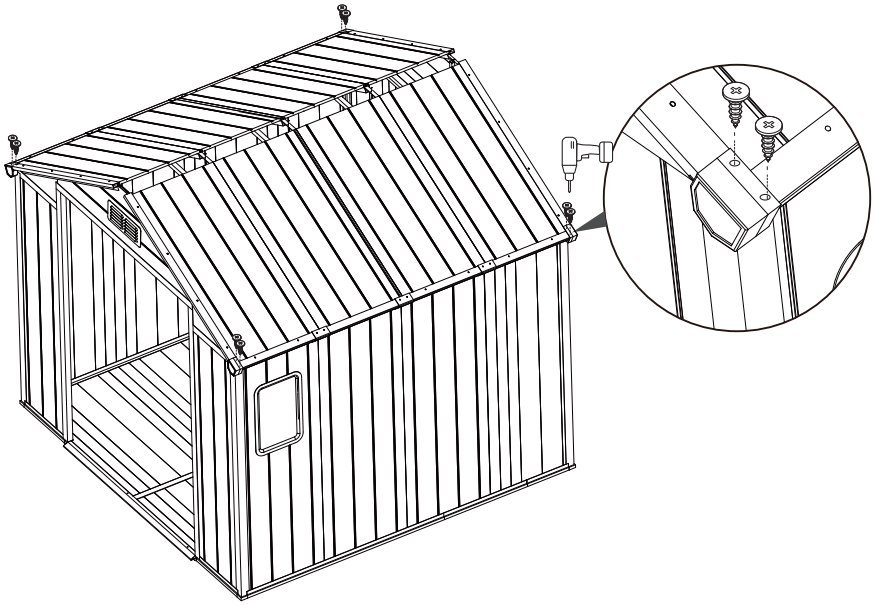

64

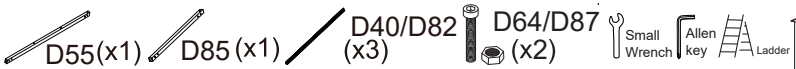

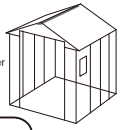

8x8 Usage D85(X1)

8x10 Usage D85(X2)

8x12 Usage D85(X3)

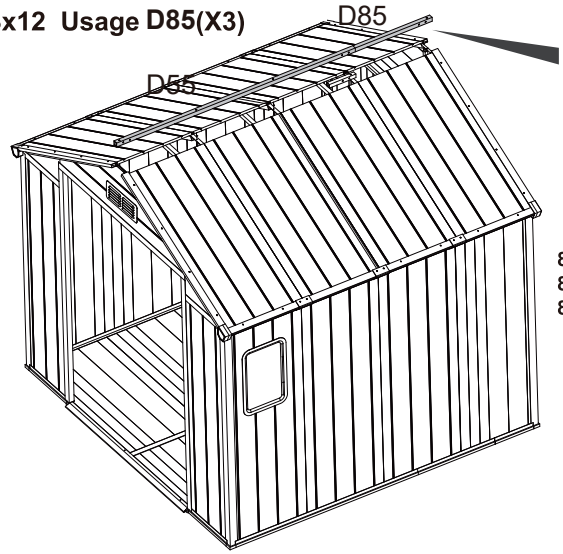

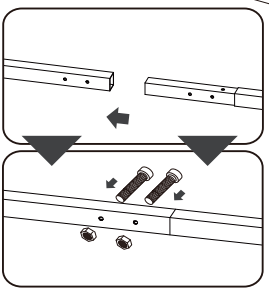

8x8 Usage D40/D82(X3) D64/D87(X2)
8x10 Usage D40/D82(X4) D64/D87(X4)
8x12 Usage D40/D82(X5) D64/D87(X6)

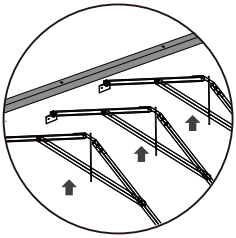

65

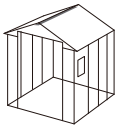

8x8 Usage C86(X1)

8x10 Usage C86(X2)

8x12 Usage C86(X3)

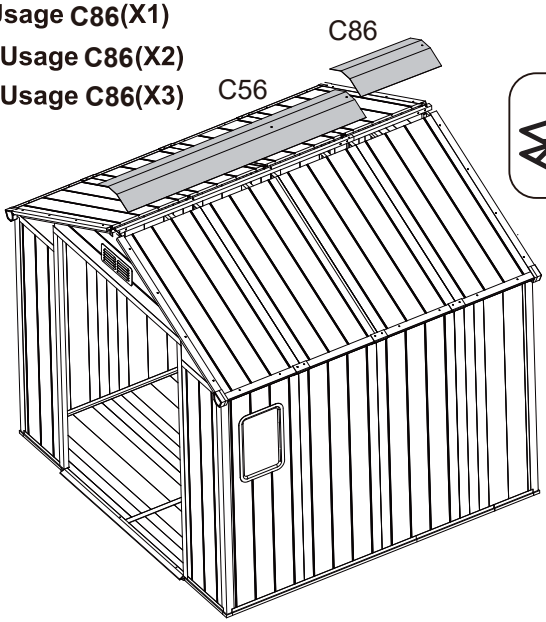

BE CAREFUL

The film needs to be torn off before installation

66 C57(x2) Ladder

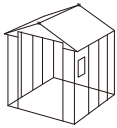

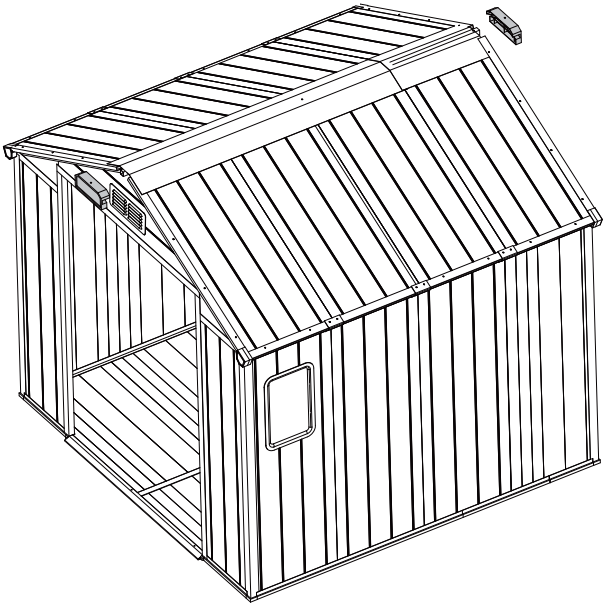

67 Φ4X16 D68(x2) Electric Drill Ladder

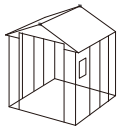

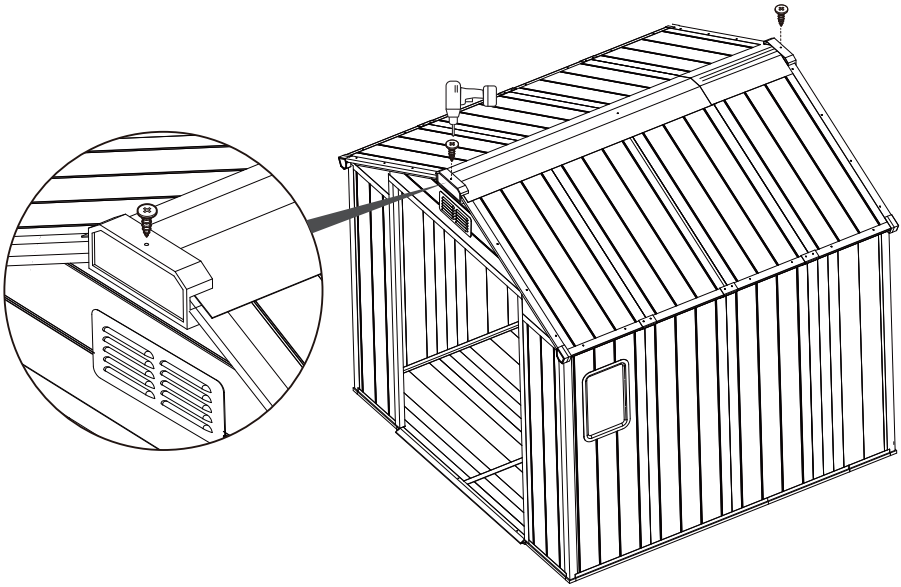

68

Φ4X16
D68/D89 (x45)

Electric Drill

Ladder

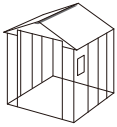

8x8 Usage D68/D89 (X45)

8x10 Usage D68/D89 (X57)

8x12 Usage D68/D89 (X69)

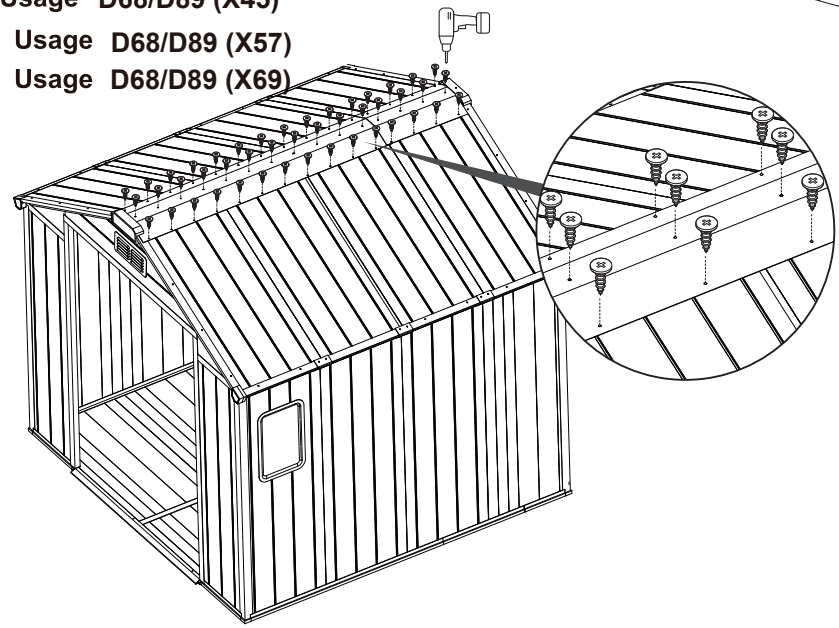

69

D63(x1)

Φ5X16
D65/D88 (x2)

Electric Drill

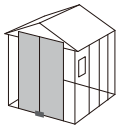

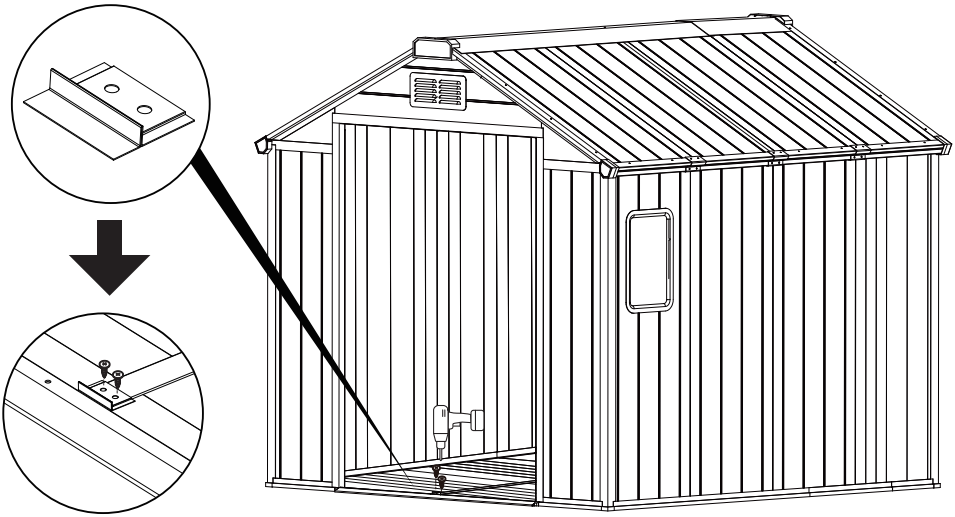

70

D62(x1) D65/D88(x2) Electric Drill Ladder

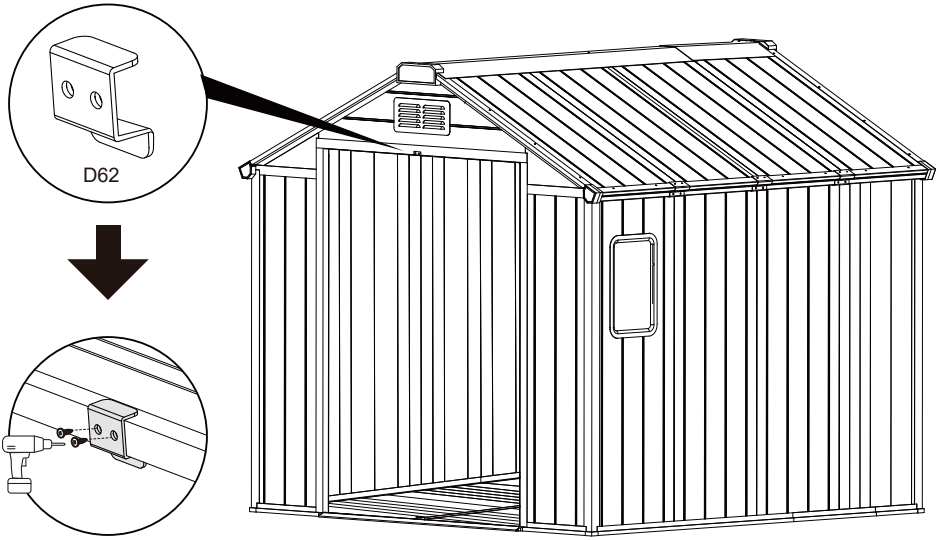

71

A58(x1) A59 (x1) Φ4X16 D68(x12) Electric Drill

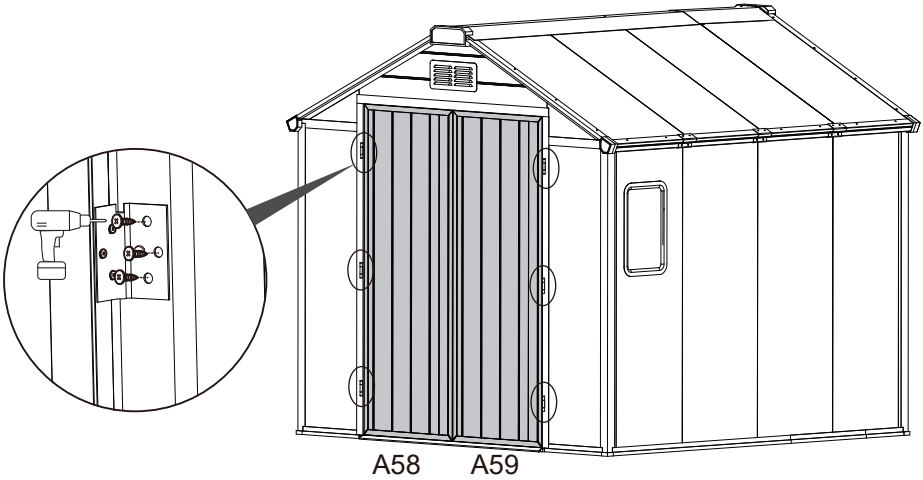

72

X2 X4 D60 D69(X1) Small Wrench Allen key

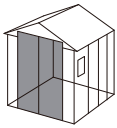

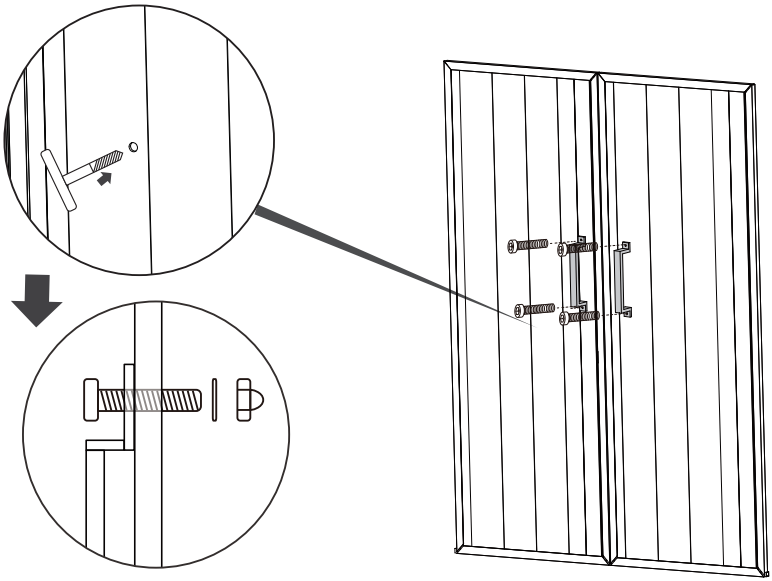

73

D61(x2) Φ5X16 D65/D88(x4) Electric Drill

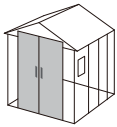

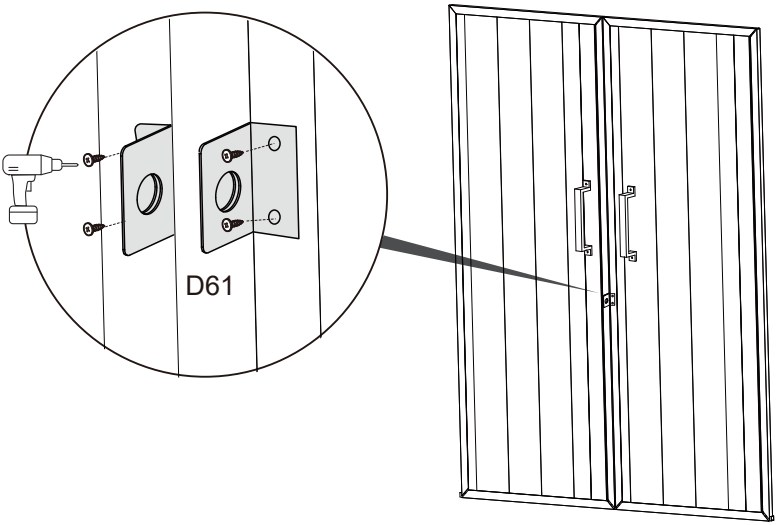

74


D70(x4)


Φ4X30
D67(x12)


D90(x4)


Φ10X100
D91(x4)

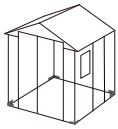

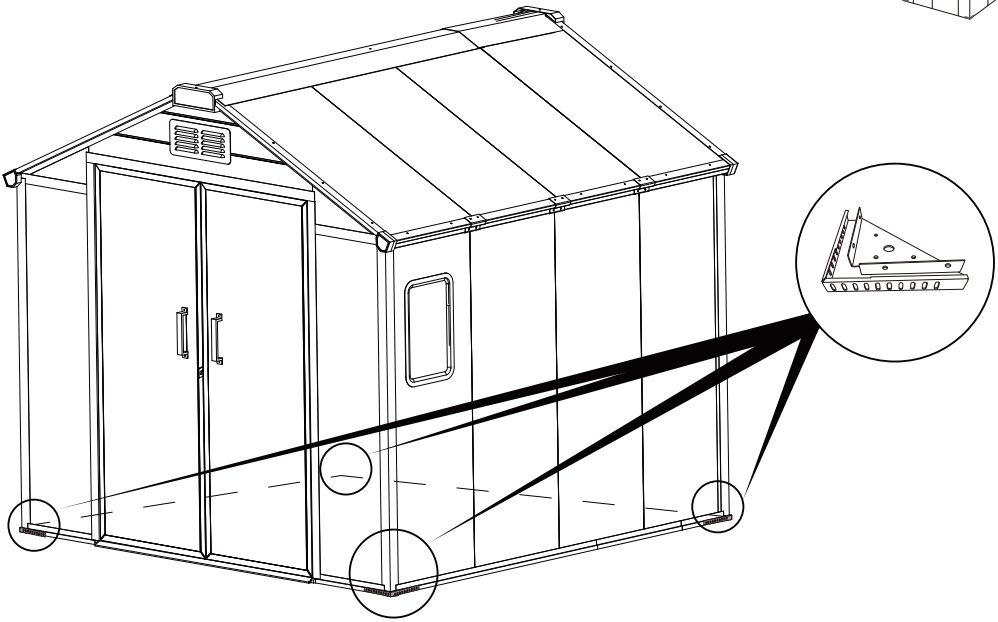

External Perspective

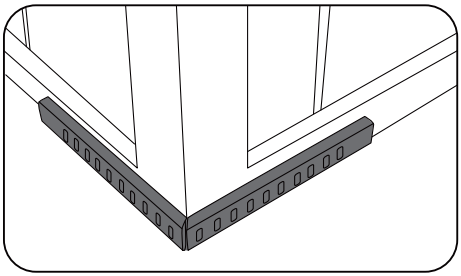

Internal Perspective

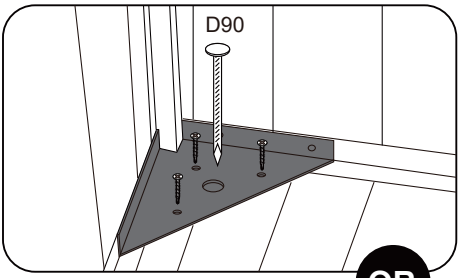

OR

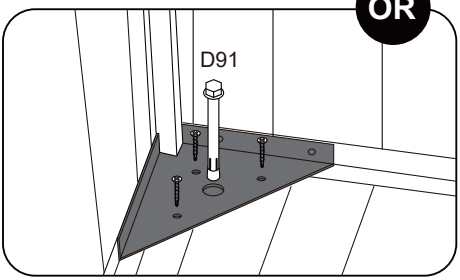

75 Finish

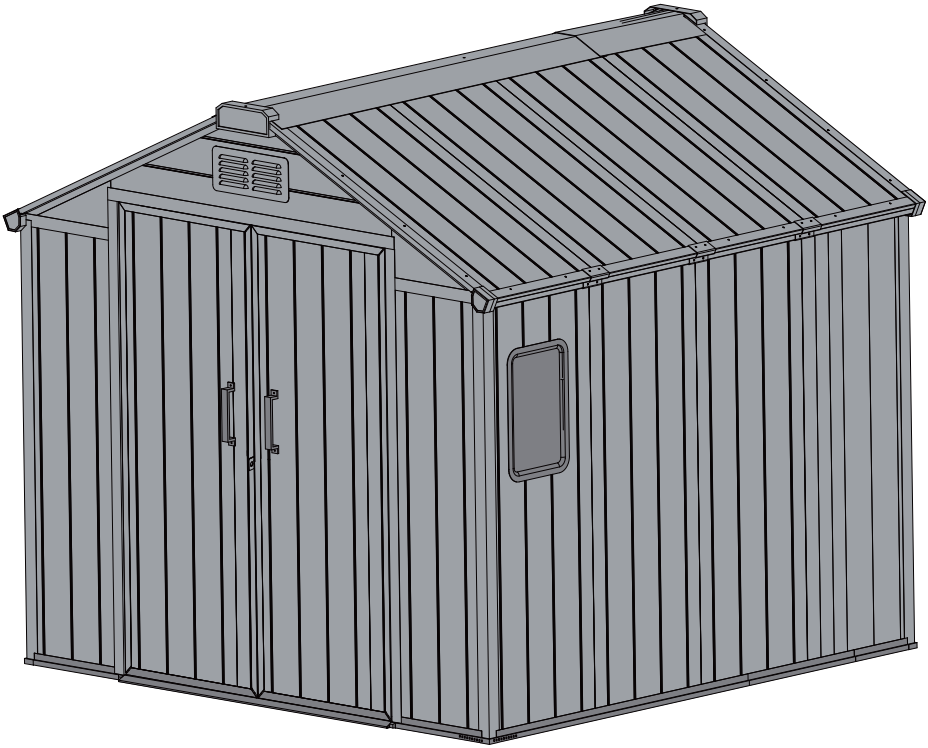

ARE AND SAFETY GUIDELINES

- The shed is intended for storage purposes only. It is not designed for habitation.
- It is strongly recommended to secure the shed to an immovable object or anchor to the ground by drilling holes in the shed floor (at the pre-marked locations) and inserting proper screws into the ground (screws are not included).
- Do not attempt assembly on windy or cold days.
- Periodically check the shed to ensure that it is stable and that the site is level.
- Be careful when handling parts with steel edges.
- When assembling or handling the shed, use only those tools listed in the user manual.
- Avoid using a lawnmower or mechanical scythe near the shed.
- Wear safety goggles and always follow the manufacturer's instructions when using power tools.
- Wash the shed with a garden hose or a mild detergent solution. Do not use a stiff brush or abrasive cleaners, including degreasers and oil- or acetone-based cleaning materials, as these may stain or damage the shed.
- Do not store hot items, such as recently used grills and blowtorches, and volatile chemicals in the shed.
- Avoid placing heavy items against the walls, as this may cause distortion.
- Keep the roof clear of accumulated snow and leaves. Large amounts of snow on the roof can damage the shed, making it unsafe to enter.
- Wind direction is an important factor to consider when determining the location of the shed. Reduce exposure to the wind, in general, and of the door side in particular. Keep doors closed and locked when the shed is not in use to prevent wind damage.
- Do not stand on the roof.
- Consult your local authorities to check if permits are required to erect the shed.

WARNING

DO NOT COVER