CEILING FAN INSTALLATION MANUAL

Flush Mount – With Light

SECTION 1 | BEFORE INSTALLATION

1.1 SAFETY INFORMATION

Read and save these instructions before installation. Failure to follow them may result in fire, electric shock, or personal injury. For indoor use only; do not use in exposed outdoor locations. This product is not waterproof.

Input: 100-240 V AC, 50 Hz/60 Hz. Maximum motor power: 35 W (45 W for models 60 in. and above).

WARNING

- Turn OFF power at the circuit breaker before installation.
- Install only on an outlet box rated for fan support (minimum 100 lb / 45 kg).
- Properly ground the fan to reduce the risk of electric shock.
- All wiring must comply with applicable local and national electrical codes (NEC).
- Installation by a qualified electrician is strongly recommended.
- Do not use solid-state speed controls or dimmer switches with this product.
- Improper installation may cause fire, electric shock, or structural failure.
- Connect the Live (L), Neutral (N), and Ground wires correctly.
- Ensure all wire connections are secure and properly insulated.
- Do not modify the wiring, receiver, or electrical components.
- Use only approved connectors and wiring devices.
- Disconnect power immediately if an electrical fault is detected.
- Batteries may cause serious injury if swallowed.

CAUTION

- Do not insert objects into moving blades.
- Do not bend blades during installation, balancing, or cleaning.
- Tighten all screws and fasteners securely before operation.
- Allow blades to stop completely before reversing direction.
- Keep hands, hair, and loose clothing away from moving parts.
- Do not operate the fan with damaged or missing parts.
- Maintain at least 30 in. (76 cm) clearance from walls or obstacles.
- Install blades at least 7 ft (2.1 m) above the floor.
- Ensure the ceiling structure safely supports the fan weight.
- Verify all mounting hardware is properly installed before use.
- Do not operate the fan until all components are installed correctly.
- Do not touch the fan while it is moving.
- Turn OFF power before cleaning or maintenance.
- Clean with a soft, dry cloth only. Do not use water, solvents, or abrasives.
- Inspect and retighten all fasteners at least twice yearly.
- Replace damaged parts immediately with manufacturer-approved parts only.
- Batteries are not supplied with this product.
- Install batteries according to the polarity markings.
- Keep batteries out of reach of children.
- Do not mix old and new batteries or different battery types.
- Remove batteries when the remote control will not be used for an extended period.
- Dispose of batteries in accordance with local regulations.

NOTE This manual does not cover all possible situations. Proper installation, operation, and maintenance are the user's responsibility. Retain this manual for future reference.

1.2 TOOLS REQUIRED

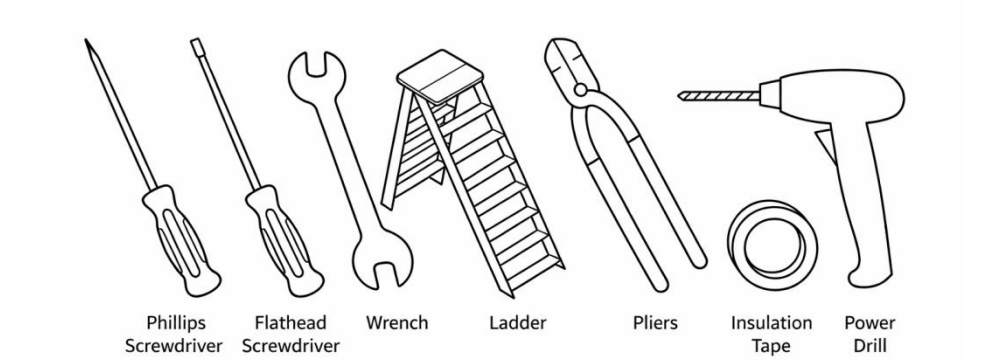

1.3 Package Contents

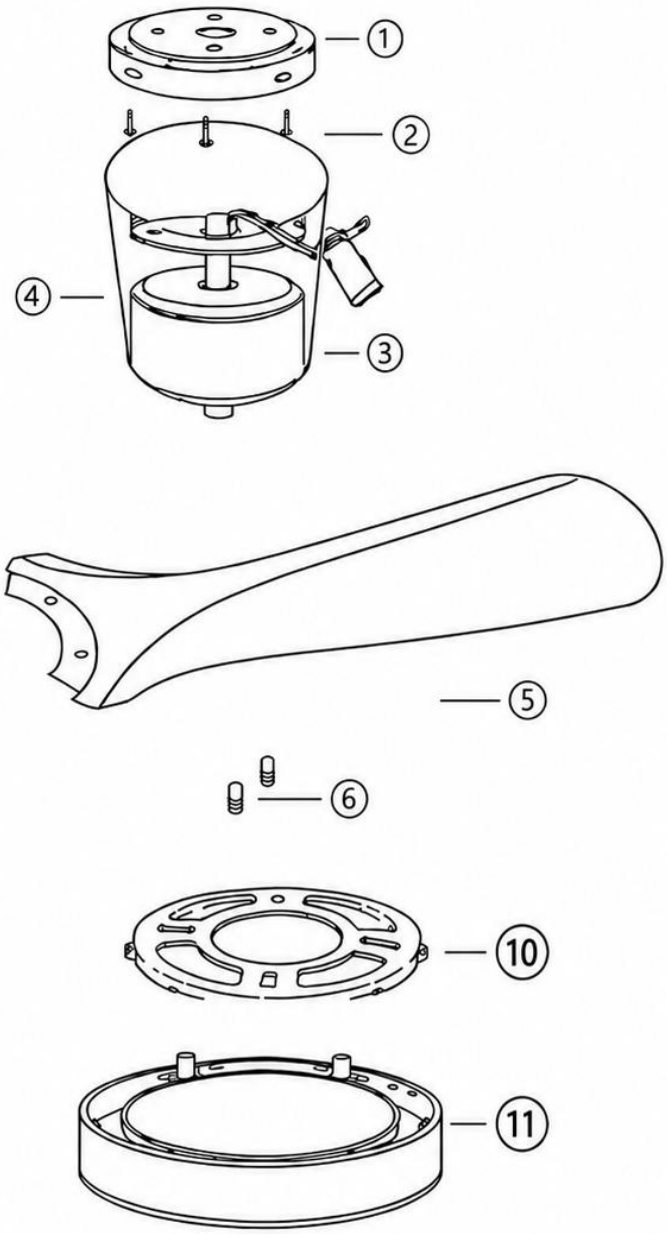

Parts List

① Mounting Bracket
② Mounting Bracket Screws
③ Motor Assembly
④ Motor Housing
⑤ Fan Blade
⑥ Blade Screws
⑦ Bottom Cover
⑧ Remote Control
⑨ Receiver
⑩ Light Kit Adapter Ring
⑪ LED Light Kit

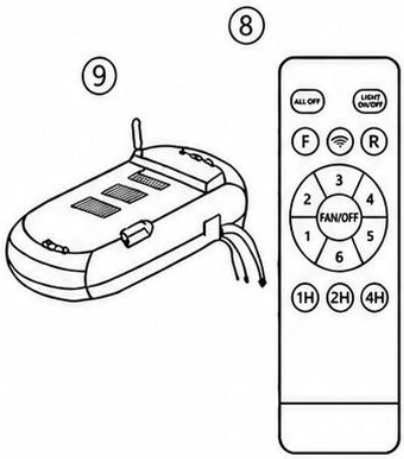

Hardware included

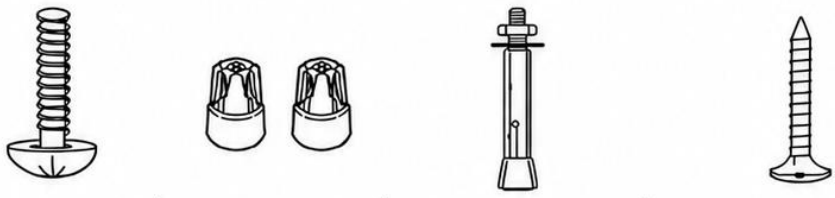

Blade Screw | Wire Nuts | Expansion Bolts | Self-tapping Screws

SECTION 2 | INSTALL THE MOUNTING BRACKET

Select the mounting method that matches the ceiling structure.

2.1 REMOVE THE MOUNTING BRACKET

2.1.1 Loosen and remove the mounting screws.

2.1.2 Remove the receiver.Disconnect the wires for easier wiring.

NOTE

1.Keep the removed screws for later installation.

2.Support the mounting bracket while removing the last screw.

3.Do not damage the screw threads during removal.

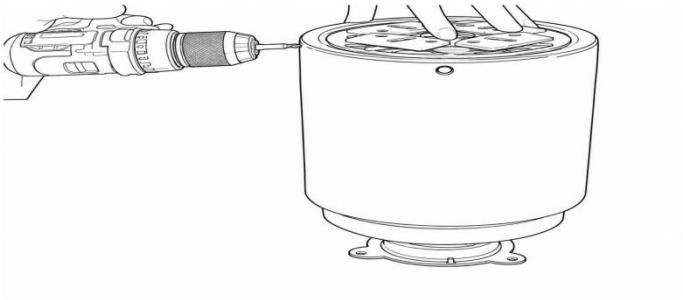

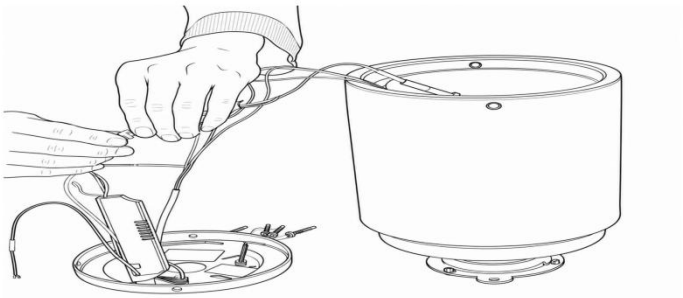

2.2 WOODEN CEILING

2.2.1 Turn OFF power at the circuit breaker before installation.

2.2.2 Confirm that the solid wood joist or other structural wood support can safely carry the fan weight. Use only approved fan-rated mounting hardware.

2.2.3 Position Mounting Bracket (A) against the structural wood support and align the mounting holes.

2.2.4 Fasten the bracket with the Self-Tapping Screws (B) shown. Tighten all screws securely.

WARNING: Secure the bracket directly to solid structural support or to a fan-rated outlet box, as applicable. Do not attach it to drywall, thin wood paneling, a loose ceiling surface, or a standard light-fixture outlet box.

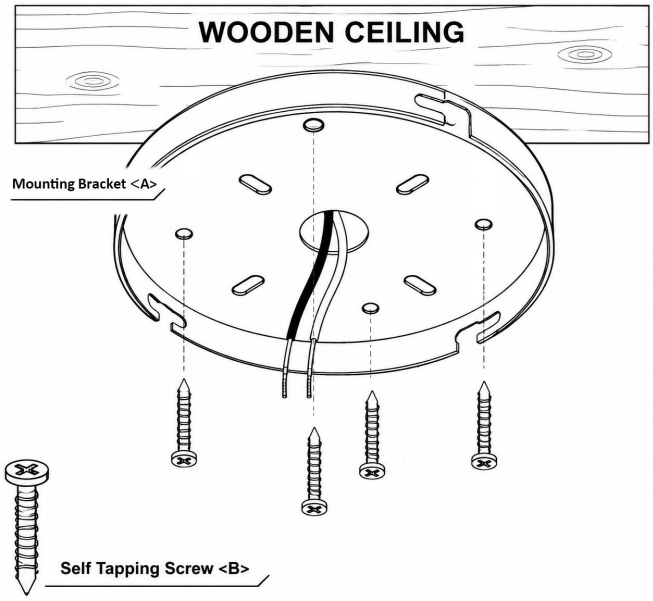

2.3 CONCRETE CEILING

2.3.1 Turn OFF power at the circuit breaker before installation.

2.3.2 Verify the concrete structure can safely support the fan. Do not install on cracked, loose, or damaged concrete.

2.3.3 Hold Mounting Bracket (A) in position and mark the anchor locations. Drill holes suitable for the Expansion Bolts (B).

2.3.4 Install Expansion Bolts (B) through the bracket. Fit Flat Washers (C), Spring Washers (D), and Nuts (E); tighten securely.

IMPORTANT: The outlet box (where used) and supporting structure must be fan-rated and capable of safely supporting the fan weight.

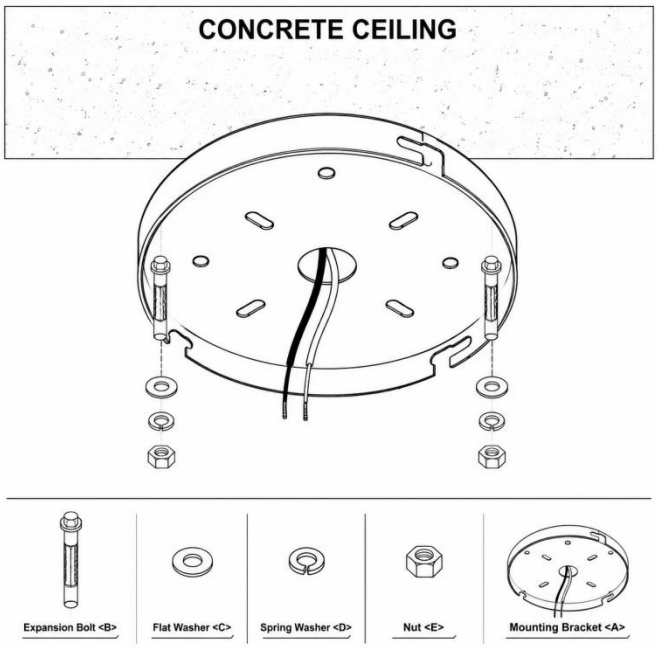

SECTION 3 | INSTALL MOTOR ASSEMBLY & RECEIVER

Install the motor assembly, connect all wiring, position the receiver, and secure the motor housing.

3.1 CONNECT WIRING

3.1.1 ⚠ WARNING - ELECTRICAL CONNECTION

Turn OFF power at the circuit breaker before making any electrical connections.

3.1.2 Connect the household supply wires to the receiver input wires according to the wire labels and wiring diagram:

Receiver Wire ① → Neutral Wire ⑤

Receiver Wire ② → Live Wire ⑥

If the outlet box includes a bare or green grounding wire, securely connect it to the fan grounding wire or the grounding screw on the mounting bracket. Do not omit the grounding connection.

3.1.3 After connecting Wire ① to Wire ⑤ and Wire ② to Wire ⑥, secure each connection with the supplied wire nuts. Tighten the wire nuts securely and ensure that no bare copper wire is exposed.

3.1.4 Connect Receiver Connector ③ to Motor Connector ⑦, and connect Receiver Connector ④ to Motor Connector ⑧.

3.1.5 Align each pair of connectors and push them together until fully seated. Do not force the connections.

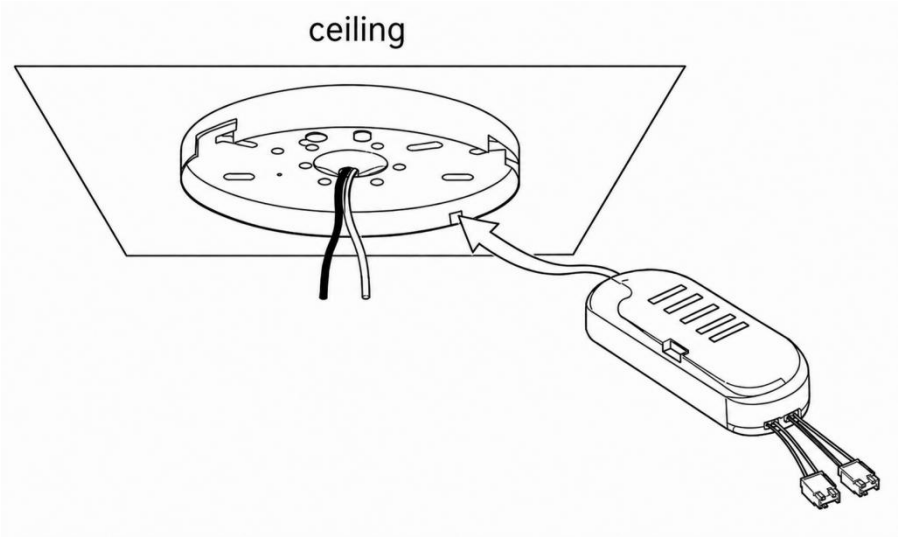

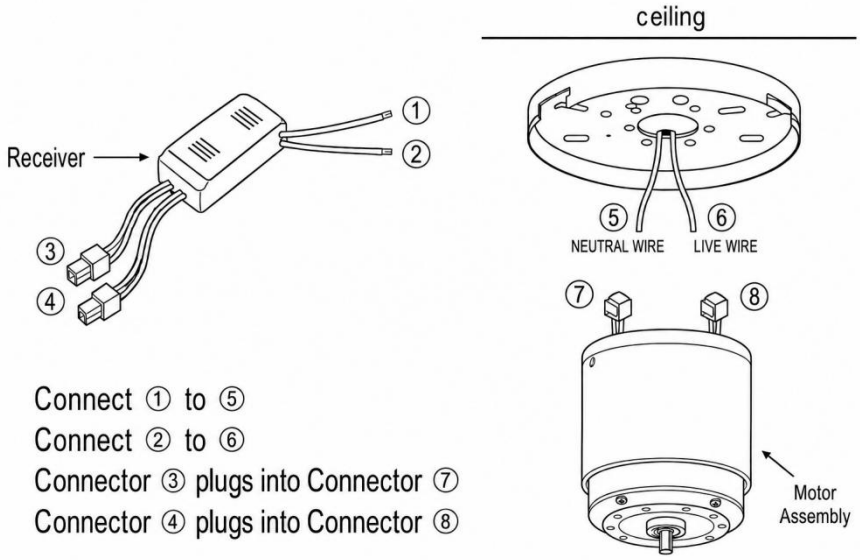

3.2 WIRING CONNECTIONS

3.2.1 ⚠ WARNING

Turn OFF power at the circuit breaker before making any electrical connections.

3.2.2 Use the diagram at right to confirm the supply connections: Black (L) to Live, White (N) to Neutral, and Green to the grounding conductor or hanger bracket grounding screw.

3.2.3 Connect the receiver output connector to the motor plug. Match Pink to Pink, Gray to Gray, and Red to Red. Push the connectors together until fully seated.

3.2.4 Keep the RF antenna naturally extended. Do not pinch, cut, coil, wrap, or damage the antenna.

3.2.5 Before restoring power, verify that all connectors are fully inserted and no wires are pinched.

IMPORTANT

The grounding conductor must not be connected to the receiver.

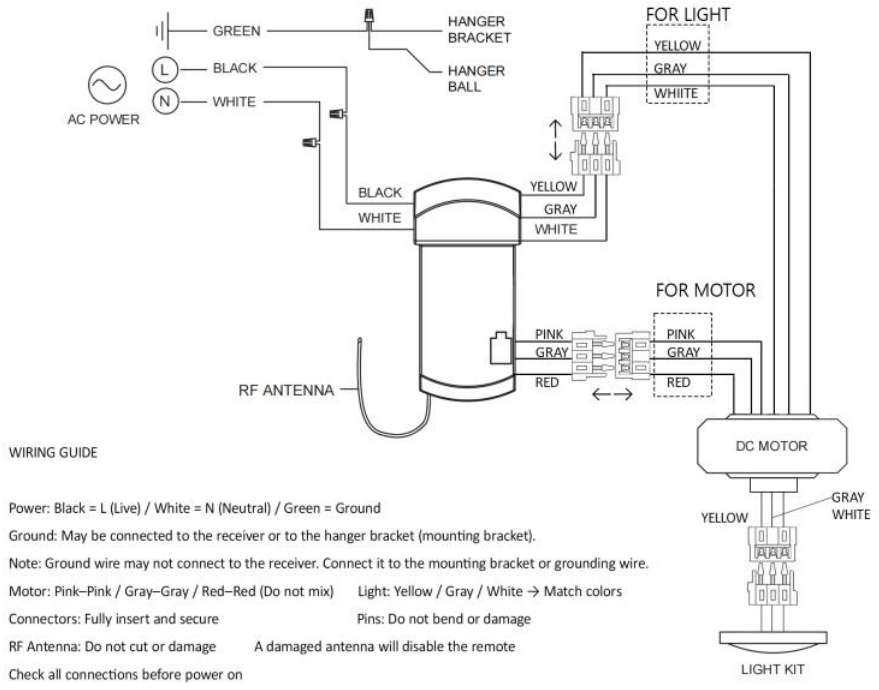

Receiver and motor connector identification

CONNECTION CHECK

- Ground wire connected to hanger bracket / house grounding wire
- Ceiling supply wires matched to receiver input
- Motor connector colors matched exactly
- RF antenna left naturally extended
- All connectors fully inserted; no wires pinched

3.3 SECURE MOTOR HOUSING

3.3.1 Align the motor housing with the mounting bracket.

3.3.2 Ensure all tabs are properly aligned before rotating.

3.3.3 Rotate the motor housing clockwise until it locks securely into place.

3.3.4 Confirm the motor housing is fully secured before operation.

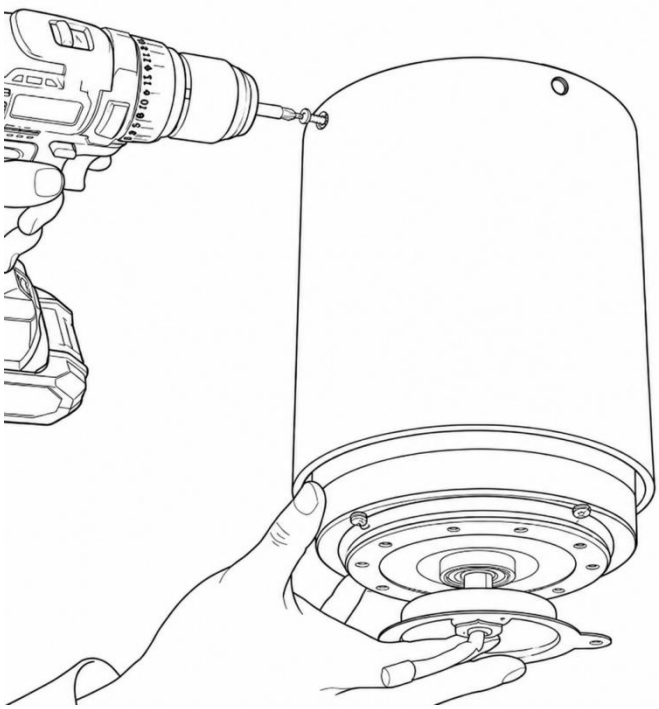

SECTION 4 | INSTALL THE FAN BLADES

Install the fan blades using the supplied screws and washers. Ensure all blades are installed in the correct orientation and securely tightened.

4.1 ALIGN AND ATTACH FAN BLADES

4.1.1 Align the blade mounting holes with the corresponding holes on the motor assembly.

4.1.2 Ensure the side marked “This Side Up” faces the ceiling before installation.

4.1.3 Insert the supplied blade screws. Start all screws by hand before tightening.

⚠ WARNING - BLADE INSTALLATION

Keep the motor assembly stable during blade installation. Ensure all blade screws are securely tightened before operation.

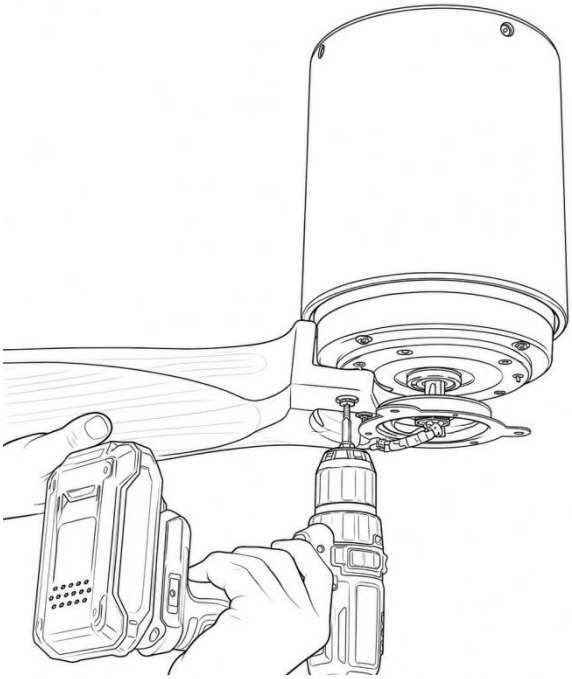

4.2 SECURE ALL FAN BLADES

4.2.1 Install the remaining blades in the same orientation.

4.2.2 Tighten all blade screws evenly and ensure each screw is installed with a washer.

4.2.3 Gently check each blade after installation. If any blade is loose or moves, tighten the corresponding screws.

4.2.4 Use a manual Phillips screwdriver for final tightening. Do not overtighten the blade screws.

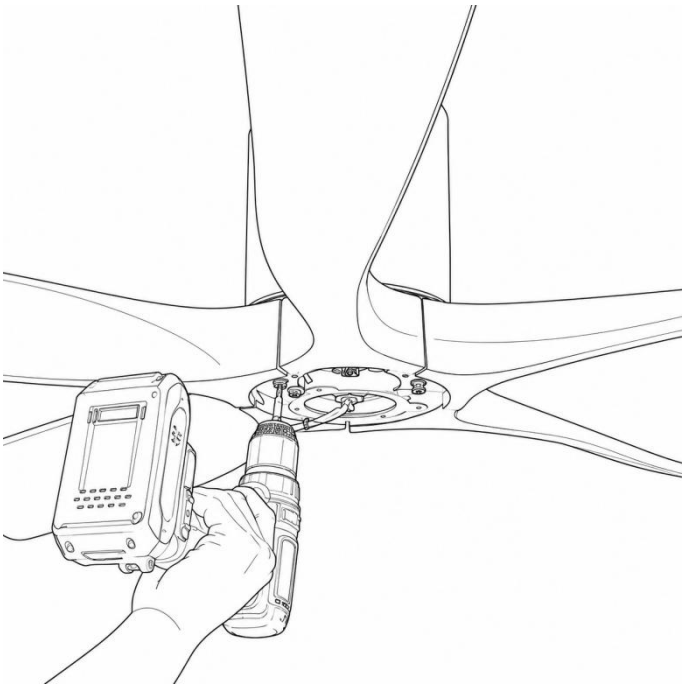

SECTION 5 INSTALL LED LIGHT COMPONENTS

Install the LED mounting bracket, connect the LED module, and secure the lampshade.

5.1 INSTALL Light Kit Adapter Ring

5.1.1 Remove all screws from the bottom of the motor assembly.

5.1.2 Align the mounting holes on the light kit adapter ring with the holes on the motor assembly.

5.1.3 Insert the removed screws through the light kit adapter ring.

5.1.4 Tighten all screws clockwise until the light kit adapter ring is securely attached.

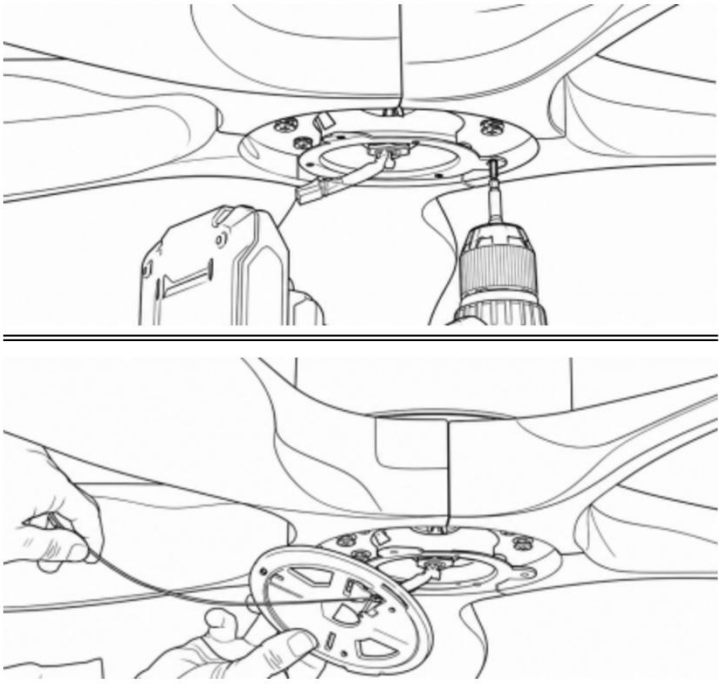

5.2 INSTALL LED MODULE

5.2.1 Attach the safety cable on the LED module to the light kit adapter ring.

5.2.2 Connect the LED module wiring.

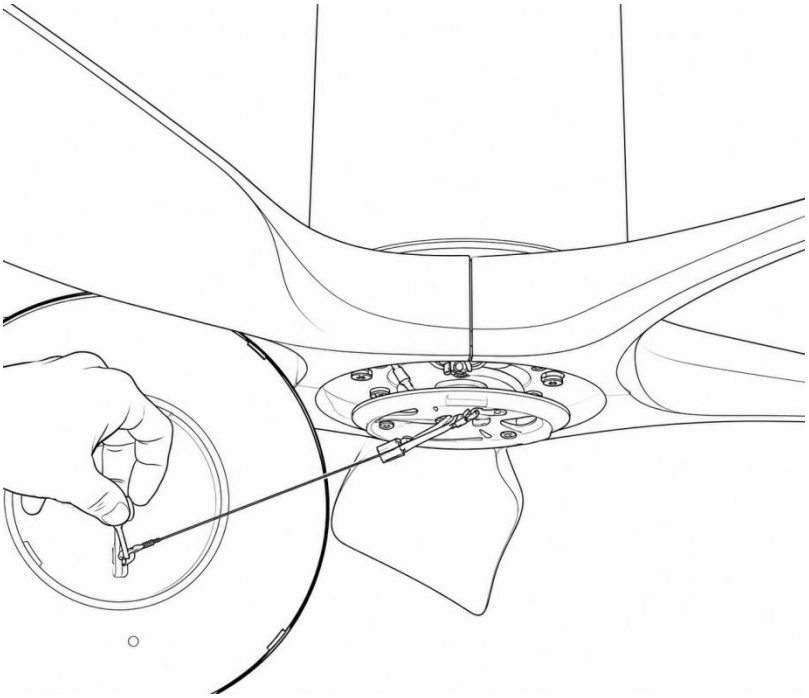

5.3 INSTALL LED Light Kit **5.3.1 Align the LED Light Kit** **with the mounting slots.** **5.3.2 Rotate the LED Light Kit** **until it locks securely into position.** **5.3.3 Confirm the LED Light Kit** **is firmly attached before operation.**	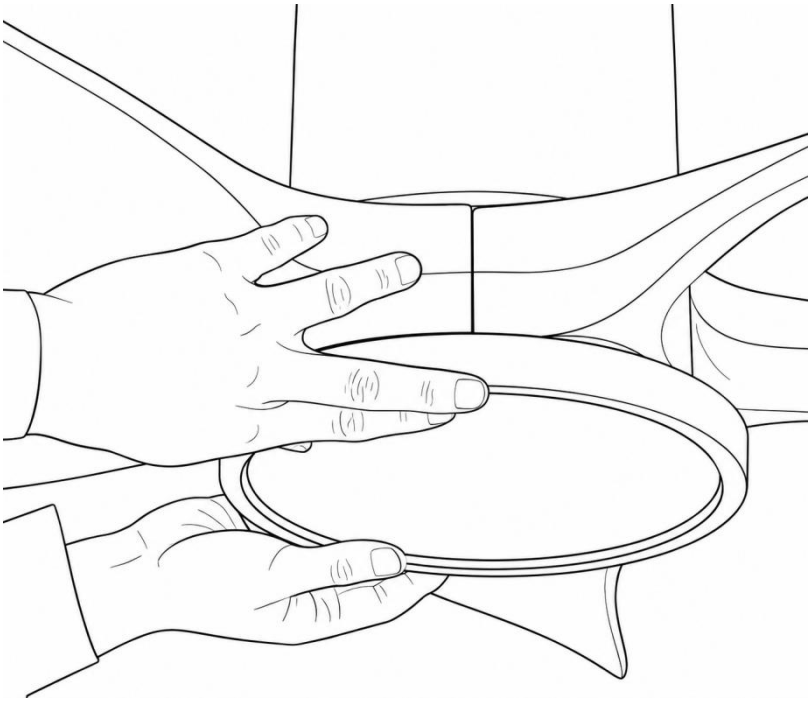

SECTION 6 | REMOTE CONTROL

Use the remote control to operate fan speed, direction, timer settings, and available light functions.

6.1 REMOTE CONTROL FUNCTIONS

6.1.1 BUTTON FUNCTIONS

ALL OFF: Press to turn off the fan and light functions.

LIGHT ON/OFF: Press to turn the light on or off.

F/R: Press to select forward or reverse fan rotation.

MUTE: Press to turn the sound on or off.

1 – 6: Press to select one of six fan-speed settings.

PAIR CODE / FAN OFF: Press to turn off the fan. Press and hold to enter remote pairing mode.

1H / 4H / 8H: Press to set a 1-hour, 4-hour, or 8-hour automatic shutoff timer.

WARM LIGHT: Press to select warm light color temperature.

NEUTRAL LIGHT: Press to select neutral light color temperature.

COLD LIGHT: Press to select cool light color temperature.

BRIGHTNESS +: Press to increase light brightness.

BRIGHTNESS -: Press to decrease light brightness.

NOTE: Batteries are not included and must be purchased separately.

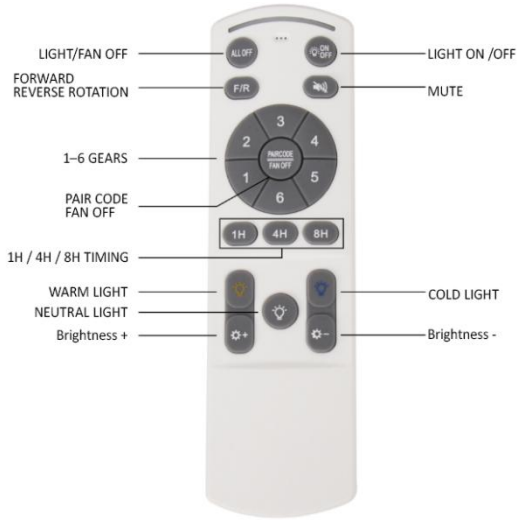

6.2 REMOTE CONTROL PAIRING

6.2.1 Turn off power at the circuit breaker and wait for 15 seconds. Then restore power.

6.2.2 After power is restored, the receiver installed on the ceiling will make a "click" sound. The fan light will turn on, but the fan will not start. This indicates that the power connection is normal.

6.2.3 Within 3 seconds after hearing the "click" sound, press and hold the pairing button on the remote control for 5 – 8 seconds.

6.2.4 During the pairing process, the light will dim, brighten, dim again, and brighten again until the light stops changing. The indicator light on the remote control will also turn on.

6.2.5 After pairing is completed, test the light brightness adjustment, light on/off function, and fan operation to ensure all functions work properly.

6.2.6 If the remote control still cannot operate the fan, repeat the pairing procedure or contact the manufacturer for assistance.

NOTE:Pairing issues may be caused by power, battery, signal, or interference problems. For more details, see SECTION 7 | TROUBLESHOOTING.

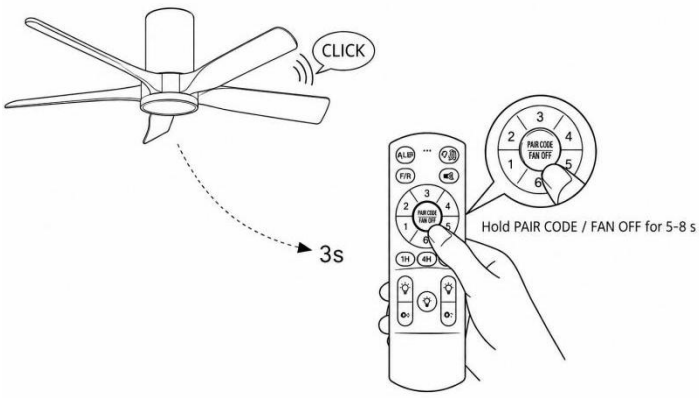

SECTION 7 | TROUBLESHOOTING

WARNING: Disconnect power at the circuit breaker before troubleshooting. Never touch, adjust, or install balancing parts while the fan blades are rotating; wait until they stop completely.

SYMPTOM	SOLUTION
FAN WILL NOT START	• Check circuit-breaker and wall-switch power. • Verify all wiring connections are secure and correct. • Confirm the remote control and receiver are paired. • Replace remote-control batteries if needed.
FAN MAKES NOISE OR RATTLES	• Tighten all motor-housing and blade screws. • Ensure internal wires do not touch each other or metal parts. • A new fan may need a brief break-in period; persistent or severe noise is not normal. • Ensure the canopy is secure and not rubbing against the ceiling.
FAN WOBBLES OR OSCILLATES	• Ensure all blades are installed evenly and securely. • Confirm the mounting bracket and ceiling outlet box are firmly installed. • Use the supplied balancing kit if required; see procedure below.
REMOTE CONTROL DOES NOT WORK	• Weak or incorrectly installed batteries may cause no response; check the batteries and replace them if needed. • A power interruption or voltage fluctuation may cause pairing to be lost; repeat the pairing procedure. • Installation or wiring changes may affect communication; verify receiver power and wiring connections. • Distance, obstructions, or nearby identical fans may interfere with the signal; move closer, remove obstructions, and pair one fan at a time if needed. • If the remote or receiver has been replaced, or the problem continues after re-pairing, check for a possible remote-control or receiver fault and contact customer service if needed.
PARTS ARE MISSING OR DAMAGED	• Contact customer service or the supplier for replacement parts.

BLADE BALANCING PROCEDURE (USE ONLY IF WOBBLE PERSISTS)

1. Turn the fan OFF and wait for a complete stop. Label the blades 1, 2, and 3 with removable tape.
2. Attach the supplied balancing clip near the middle of one blade. Restore power and test at the speed where wobble is most noticeable.
3. Turn the fan OFF and wait for a complete stop before moving the clip. Test each blade and adjust the clip position until wobble is minimized.
4. Remove the clip. Attach an adhesive balancing weight to the top centerline of the selected blade at the same location, press firmly, and retest.

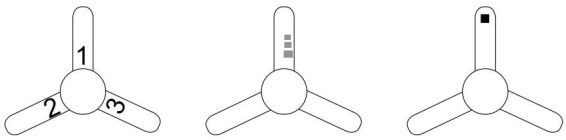

NOTE: If the problem persists after completing the above checks, contact customer service for assistance. For installation guidance, please refer to the installation video available on the product page where you purchased the fan. If needed, similar installation videos may also be used as a helpful reference.

REMOTE CONTROL - APP

1) Scan the below Barcode

2) Select the browser to open the download link

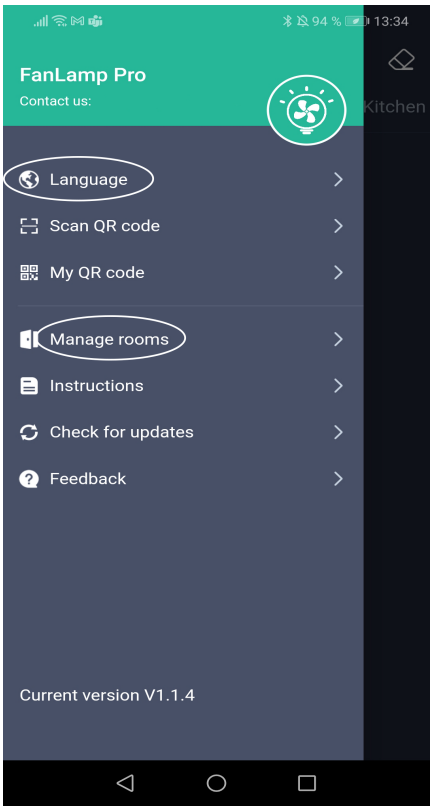

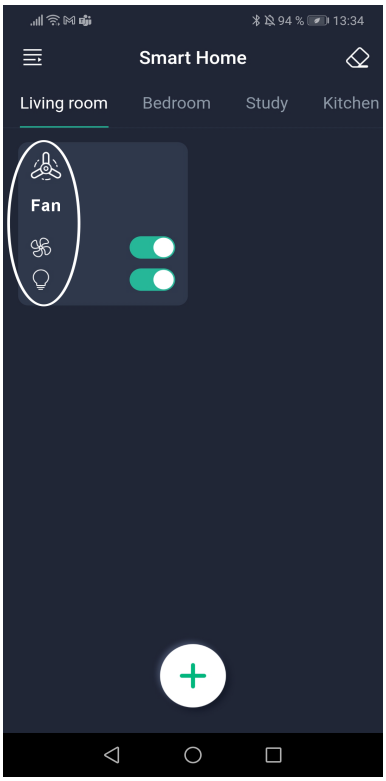

3) Choose Language and set room information

4) Enter Room interface and click the fan control interface into main control interface

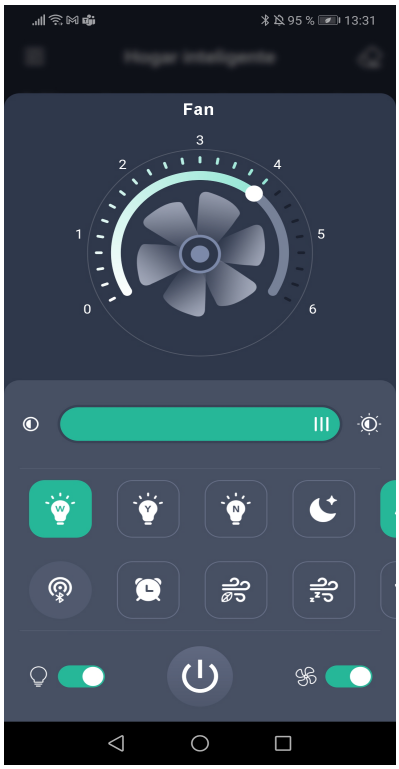

5) Enter the main control interface

6) Open the Bluetooth setting from smart phone, Smartphone is waiting to connect the new blue tooth device;

Click this code button

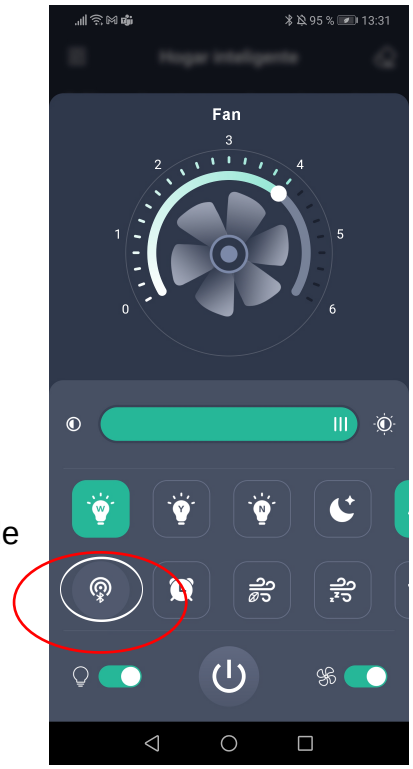

7) “OFF” the electric power supply firstly.

8) Then " turn on" the power again and quickly click on the code check button 5 times,

9) The pair button is in green, the Bluetooth device of Fan lamp had been connected with Smart phone, App could control the Fan lamp now;

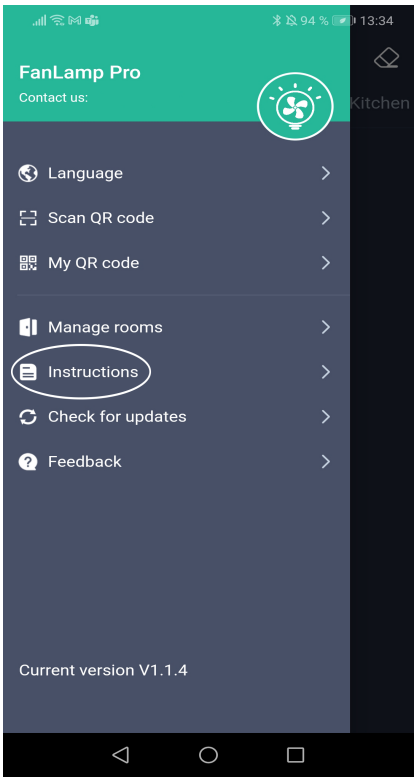

10) Follow APP's below instructions to operate the fan lamp ;

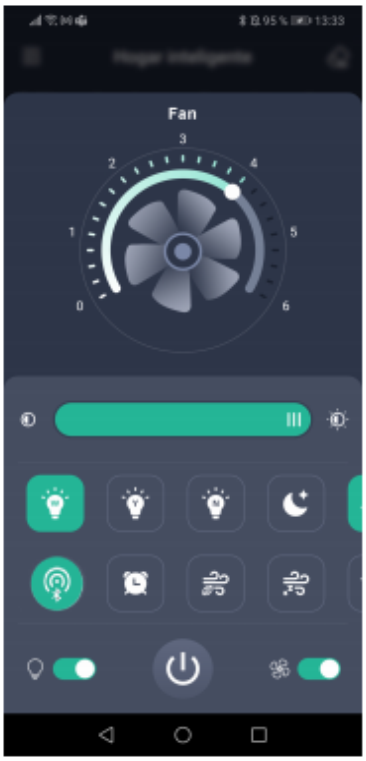

11) Only one device can be paired. Once a new device is paired, the previous device will no longer