PENROSE CONSOLE TABLE

ASSEMBLY GUIDE

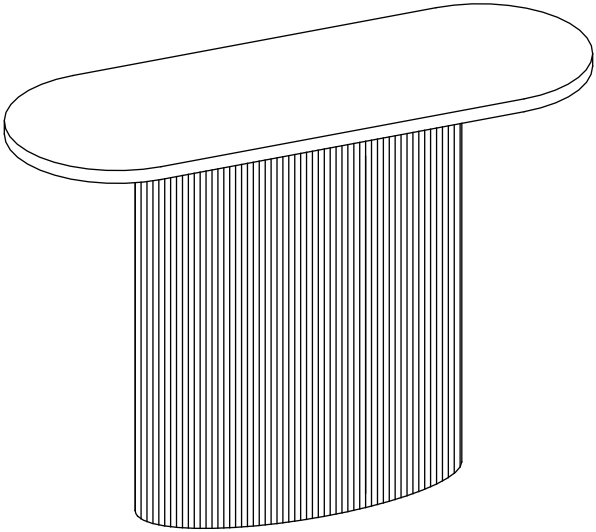

Important - Please read these instructions fully before starting assembly

SAFETY AND CARE ADVICE

NO POWER TOOLS

SAFETY AND CARE ADVICE

- Check you have all the components and tools listed.
- Remove all fittings from the plastic bags and separate them into their groups.
- We do not recommend the use of power drills/drivers for inserting screws, as this could damage the unit. Only use hand screwdrivers and Allen keys.
- Keep children and animals away from the work area, small parts could cause choking if swallowed.
- Make sure you have enough space to lay out the parts before starting.
- Assemble the item as close to its final position (in the same room) as possible.
- Do not overtighten the nuts to avoid causing damage to the threads.
- Only clean using a damp cloth and mild detergent, do no use bleach or abrasive cleaners.
- From time to time check that there are no loose screws on this unit.
- This product should not be discarded with household waste. Take to your local authority waste disposal centre.

IMPORTANT INFORMATION

30 MINUTE BUILD

TWO PERSON

MAXIMUM CAPACITY 40Kg

PLEASE CHECK CAREFULLY AND MAKE SURE YOU HAVE ALL FITTINGS AND TOOLS LISTED BELOW BEFORE YOU START.

Parts Key:

Label	Part Name	Image / Drawing	Quantify
A	Table Top	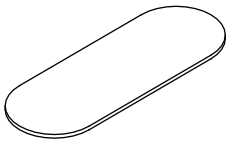	1
B	Connecting Plate	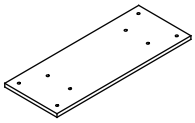	1
C	Pillar Base	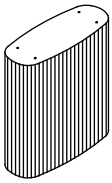	1

IMPORTANT INFORMATION

30 MINUTE BUILD

TWO PERSON

MAXIMUM CAPACITY 40Kg

PLEASE CHECK CAREFULLY AND MAKE SURE YOU HAVE ALL FITTINGS AND TOOLS LISTED BELOW BEFORE YOU START.

Hardware Key:

Label	Hardware Description	Image / Drawing	Size(mm)	Quantify
H1	Allen Key		5#	1
H2	Bolts		M8x30mm	4
H3	Bolts		M8x35mm	4
H4	Washers		Ø8x18mm	8
H5	Felt Pads			8
H6	Anti - Tip kit	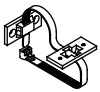		1
H7	Screws		M3.5x16mm	2

NOTE: The quantities above are the correct amount to complete the assembly. In some cases more fittings may be supplied than are required.

STEP 1

Use a clean, flat, soft surface to avoid any bumps or scratches. Unpack and place pillar base (Part C) with its bottom facing up. Peel off the backing of a felt pad (H5) and paste it onto the bottom of pillar base (Part C).

Repeat this step with the remaining felt pads (H5).

Note: Position the felt pads as close to the edge as possible.

With help, carefully turn the pillar base (Part C) upright.

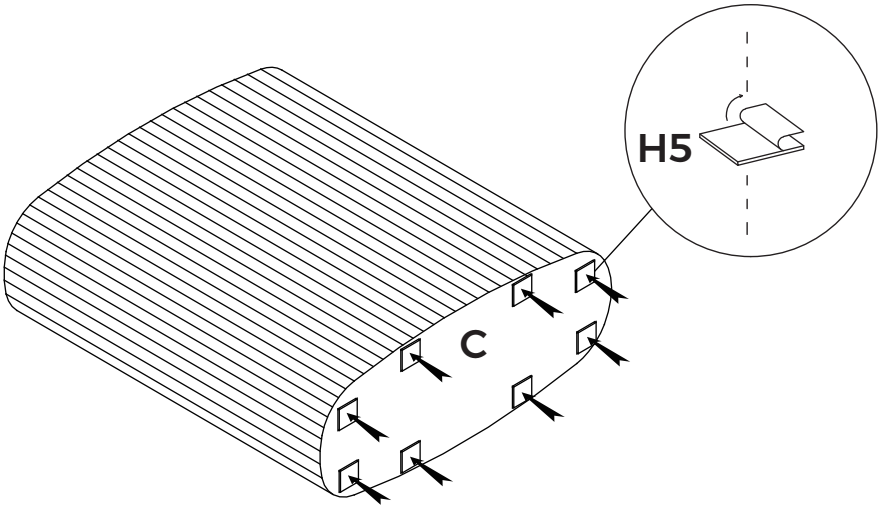

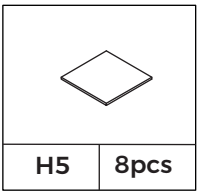

H5	8pcs

STEP 2

Attach connecting plate (Part B) to pillar base (Part C) using 4 x Bolts (H3) and 4 x Washers (H4) with Allen Key (H1).

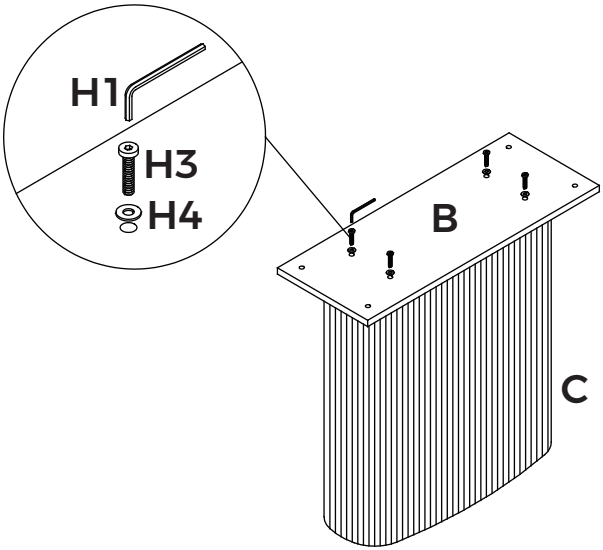

H3	4pcs	H4	4pcs	H1	1pc

STEP 3

Attach connecting plate (Part B) to table top (Part A) using 4 x Bolts (H2) and 4 x Washers (H4) with Allen Key (H1).

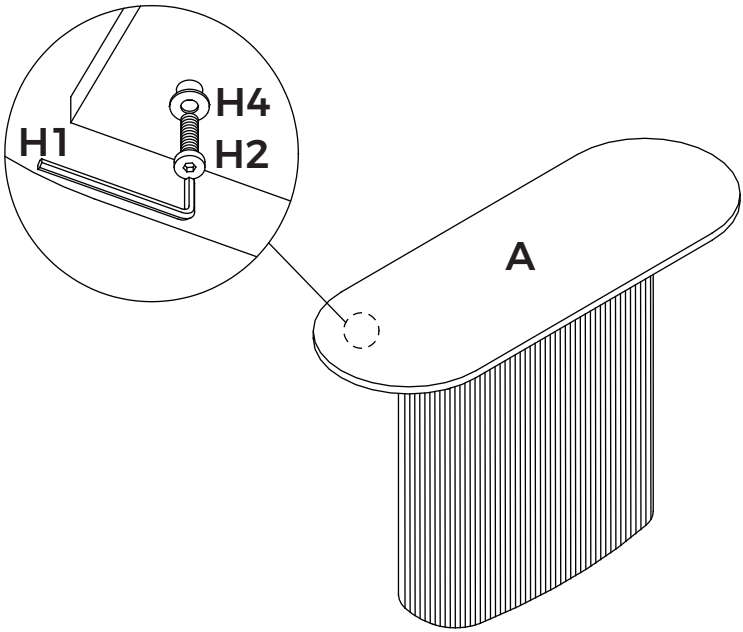

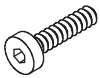					
H2	4pcs	H4	4pcs	H1	1pc

STEP 4

Attach plastic bracket (H6) to table top (Part A) using 2 x Screws (H7) with Phillips Head Screwdriver.

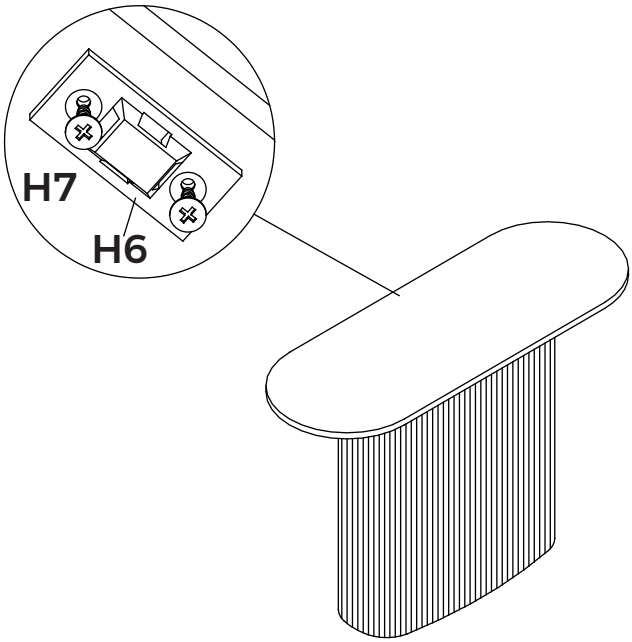

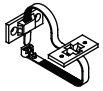			
H6	1pc	H7	2pcs

STEP 5

With help, move the Console Table into position. Mark fixing holes on wall and remove the Console Table.
Using suitable wall fixings, fix plastic bracket to the wall.
Move the Console Table closer to the wall, and pass flat end of the cable tie through the plastic bracket on the wall, then fix the other on the back of the Console Table side.
Insert the flat end of the cable tie into the buckle of the cable tie, then tighten the cable tie.

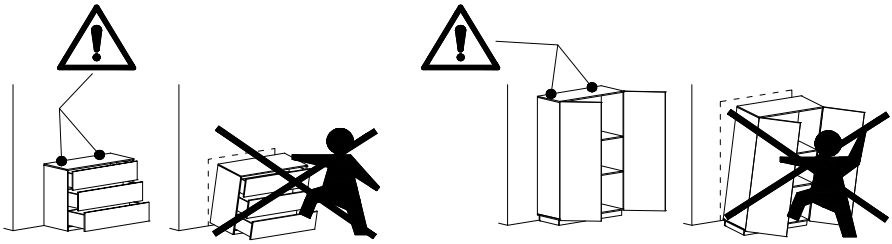

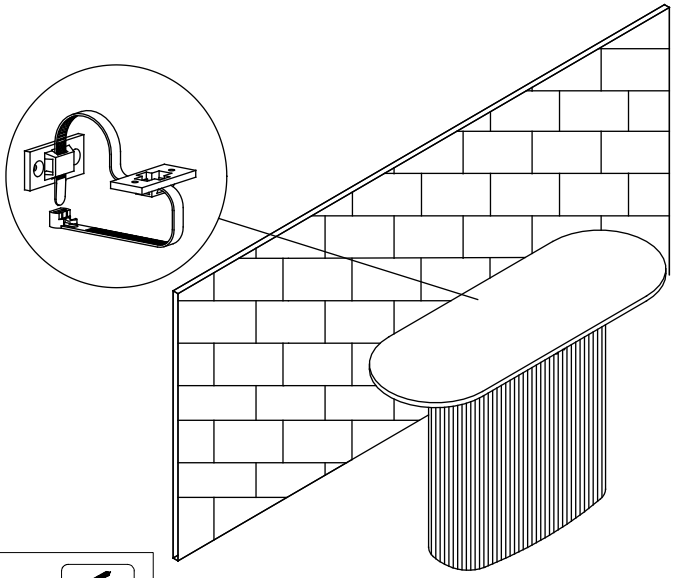

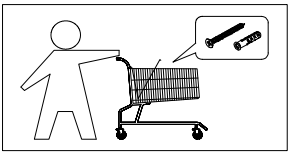

STEP 6

Your console table is complete and ready to use.

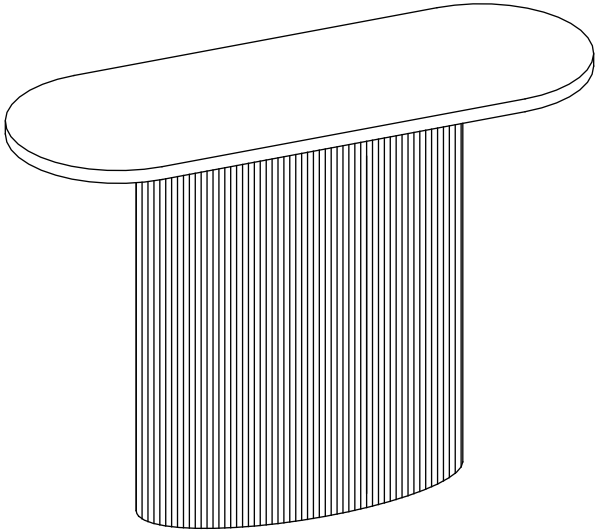

Our 2 Year GUARANTEE

Our products come with a 2 year guarantee, giving you extra peace of mind when shopping with us!

What the guarantee covers

PRE-INSERTED FIXINGS
e.g. loose metal threads

FAULTY JOINTS
e.g. legs bending

EXTERNAL FIXING FAULTS
e.g. metal discs removing from table top

STRUCTURAL INTEGRITY
e.g. the frame of the product