ASSEMBLY INSTRUCTIONS

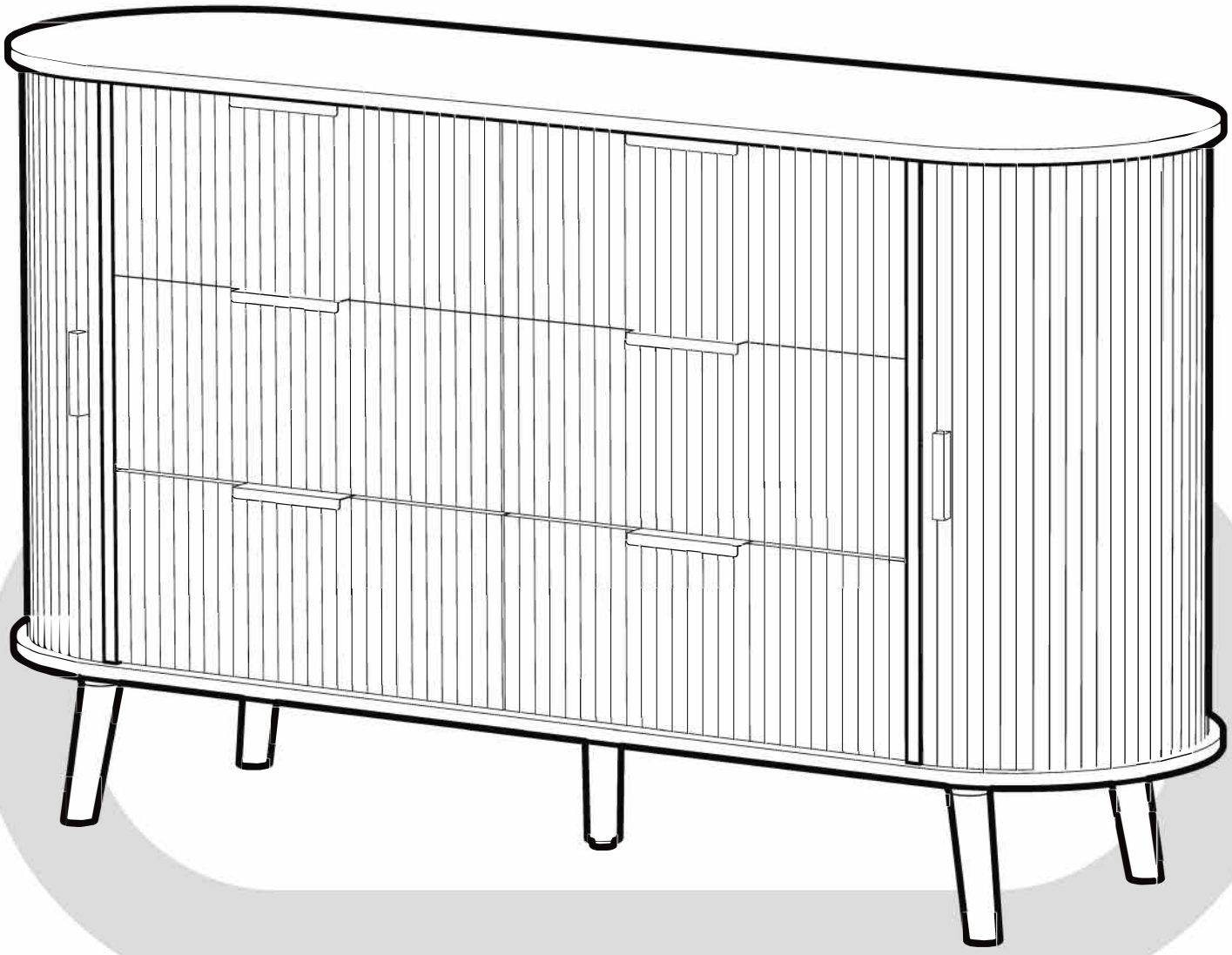

24/7 Service

Any other questions, contact us via email. We provide 24/7 online service with dedicated one-on-one expert support for all your inquiries.





⚠ WARNING

Children have died from furniture tipover. To reduce the risk of furniture tipover:

- ALWAYS install tipover restraint provided.
- NEVER put a TV on this product.
- NEVER allow children to stand, climb or hang on drawers, doors, or shelves.
- NEVER open more than one drawer at a time.
- Place heaviest items in the lowest drawer.

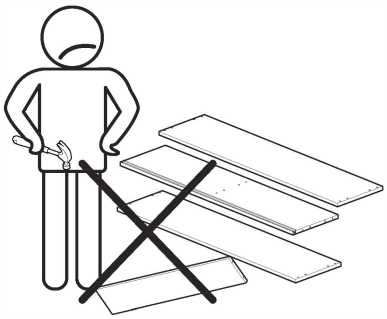

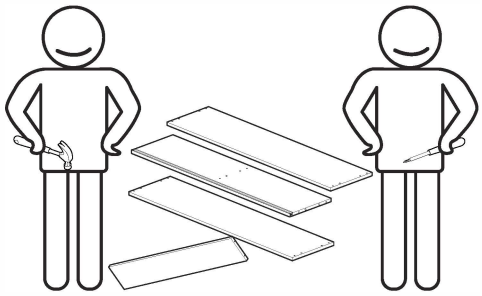

We recommend at least 2 people for the assembly.

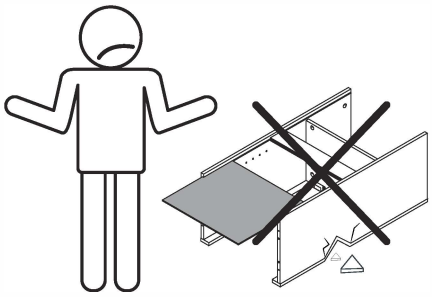

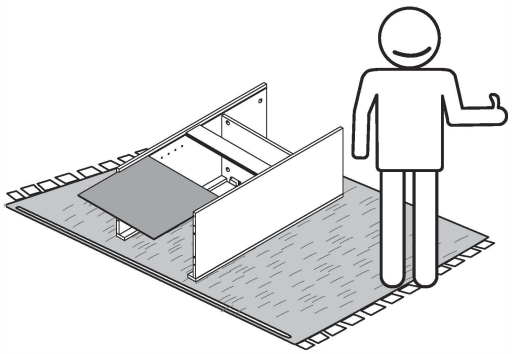

To prevent any damage during assembly, place a mat under the pieces.

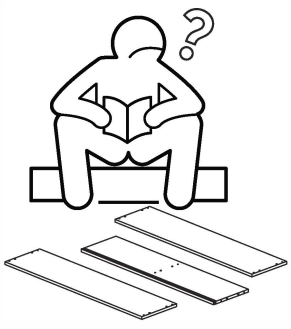



Any questions concerning assembly, contact us via email.

PARTS DIAGRAM

Check if all parts and hardwares are included. Contact us via email if there is any part missing or damaged.

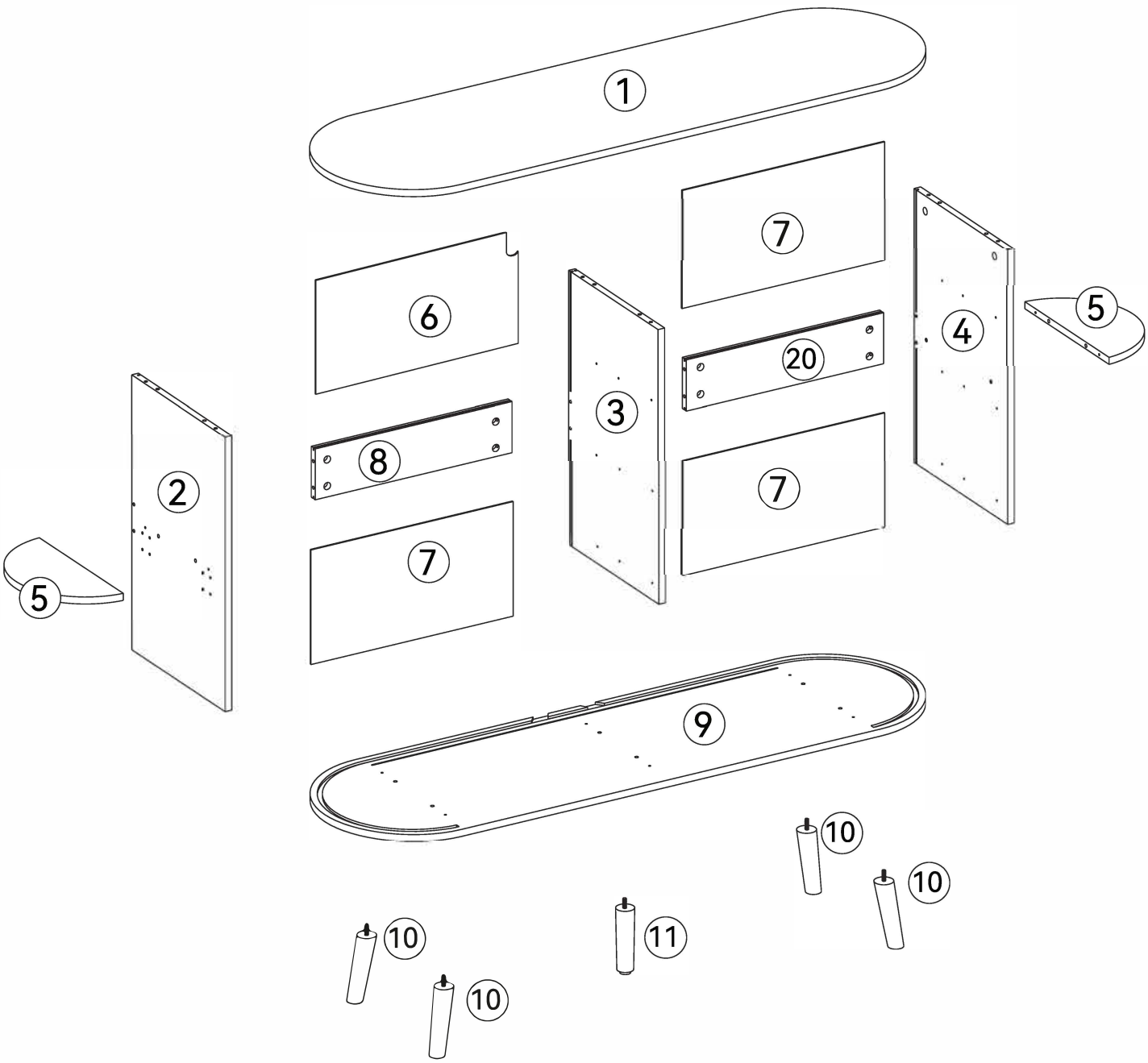

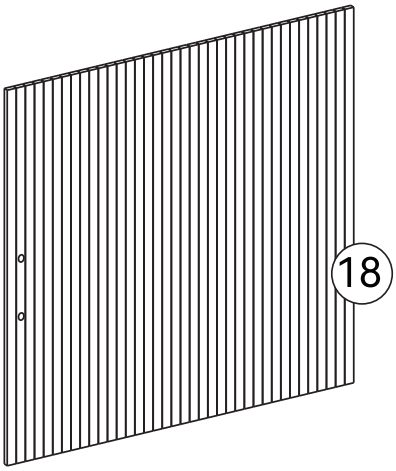

x 2

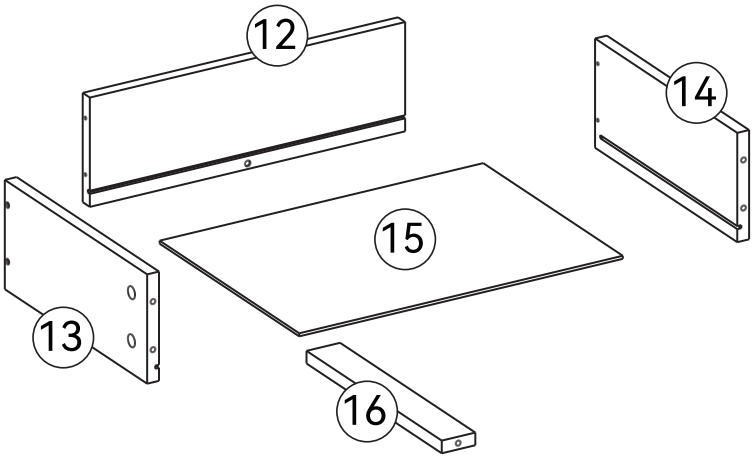

x 6

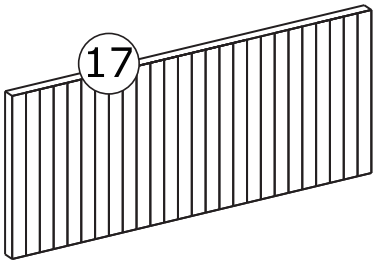

x 3

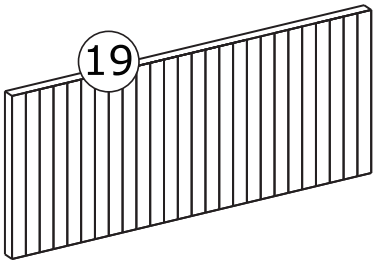

x 3

HARDWARES

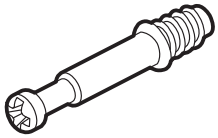

M6x35mm

A x 44



M15x10mm

B x 44

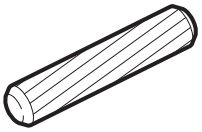

Ø6x30mm

C x 16

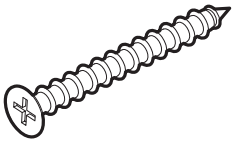

M4x35mm

D x 44



M3x14mm

E x 88

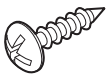

M4x14mm

F x 61

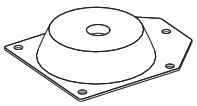

G x 4

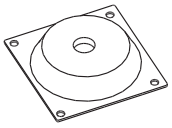

H x 1



M3.5x14mm

I x 4

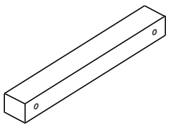

J x 2

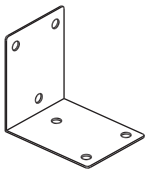

K x 4

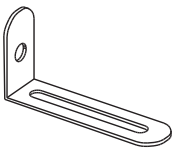

L x 1

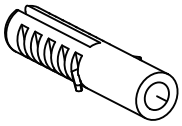

M x 1

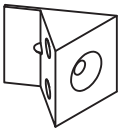

N x 16

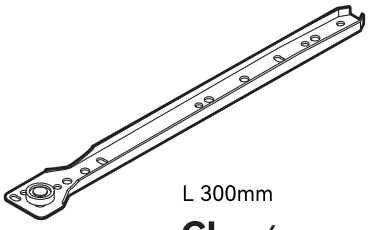

L 300mm

CL x 6

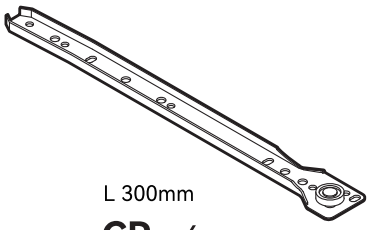

L 300mm

CR x 6

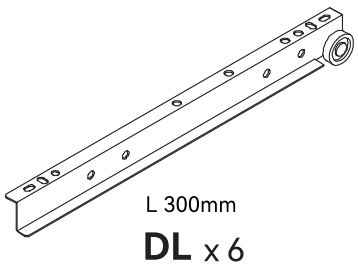

L 300mm

DL x 6

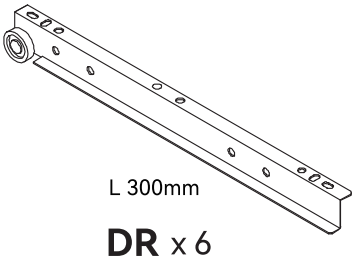

L 300mm

DR x 6

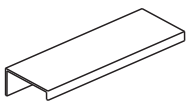

O x 6

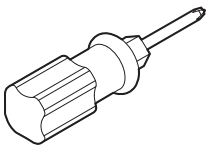

x 1

SPARE PARTS

The spare parts are the additional parts provided in case of missing or damaged ones. Keep the spare parts and tools for future use.

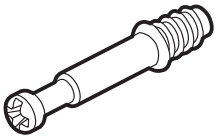

M6x35mm

A x 4



M15x10mm

B x 4

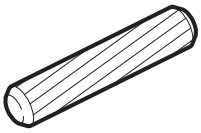

Ø6x30mm

C x 1

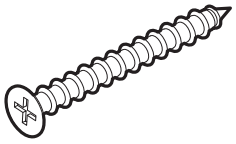

M4x35mm

D x 4



M3x14mm

E x 8

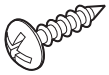

M4x14mm

F x 6

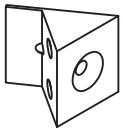

N x 1

CAM LOCK FASTEN SYSTEM

⚠ Insert the cam bolt into the hole, then insert the cam lock and tighten.

1

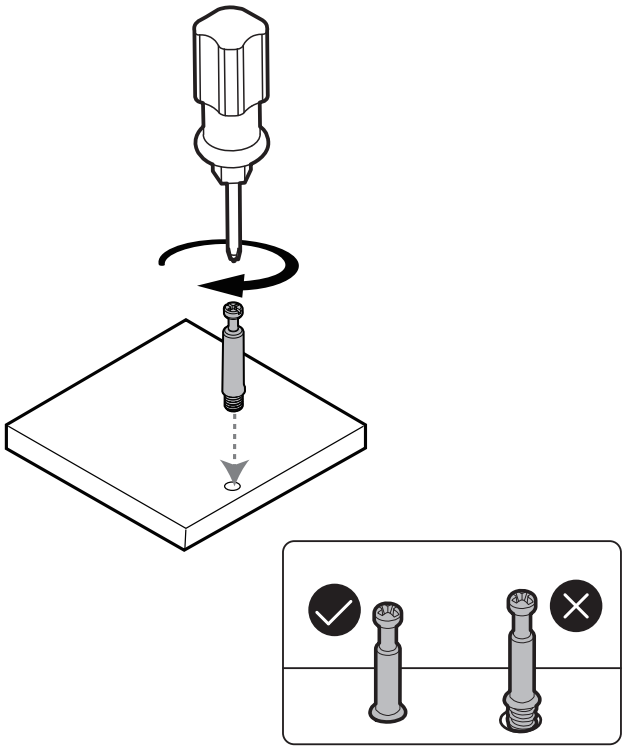

2

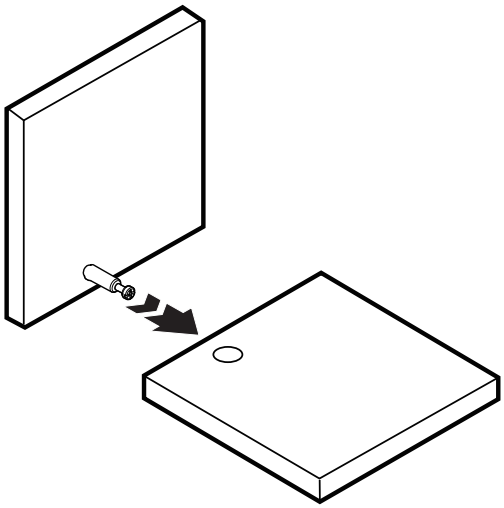

3

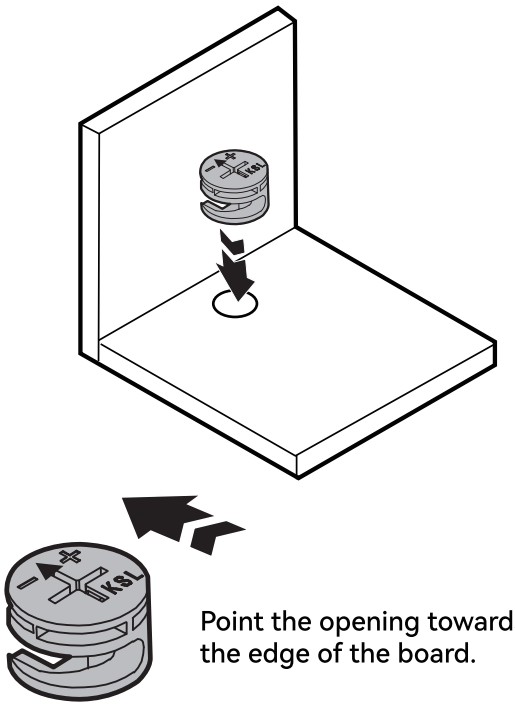

Point the opening towards the edge of the board.

4

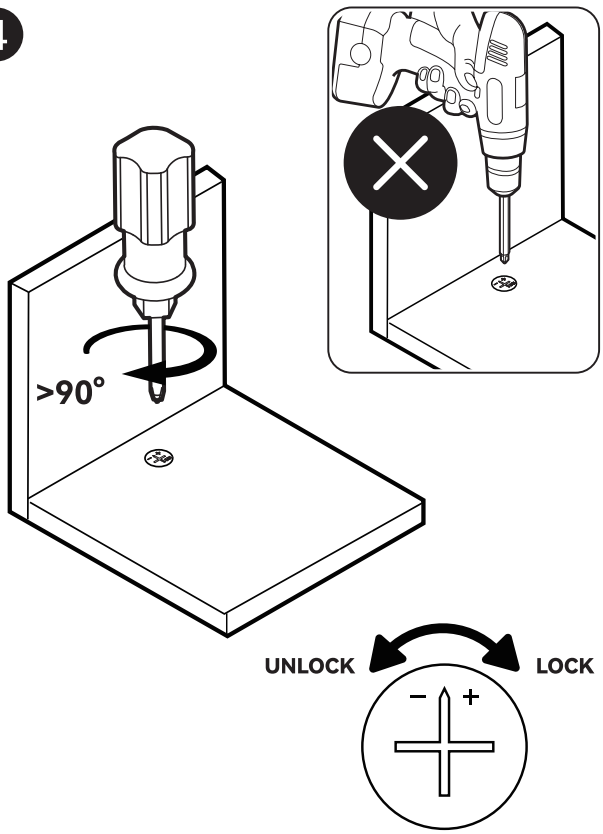

ASSEMBLY

1

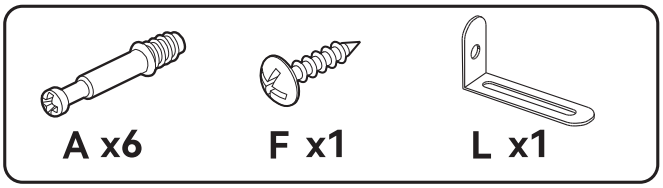

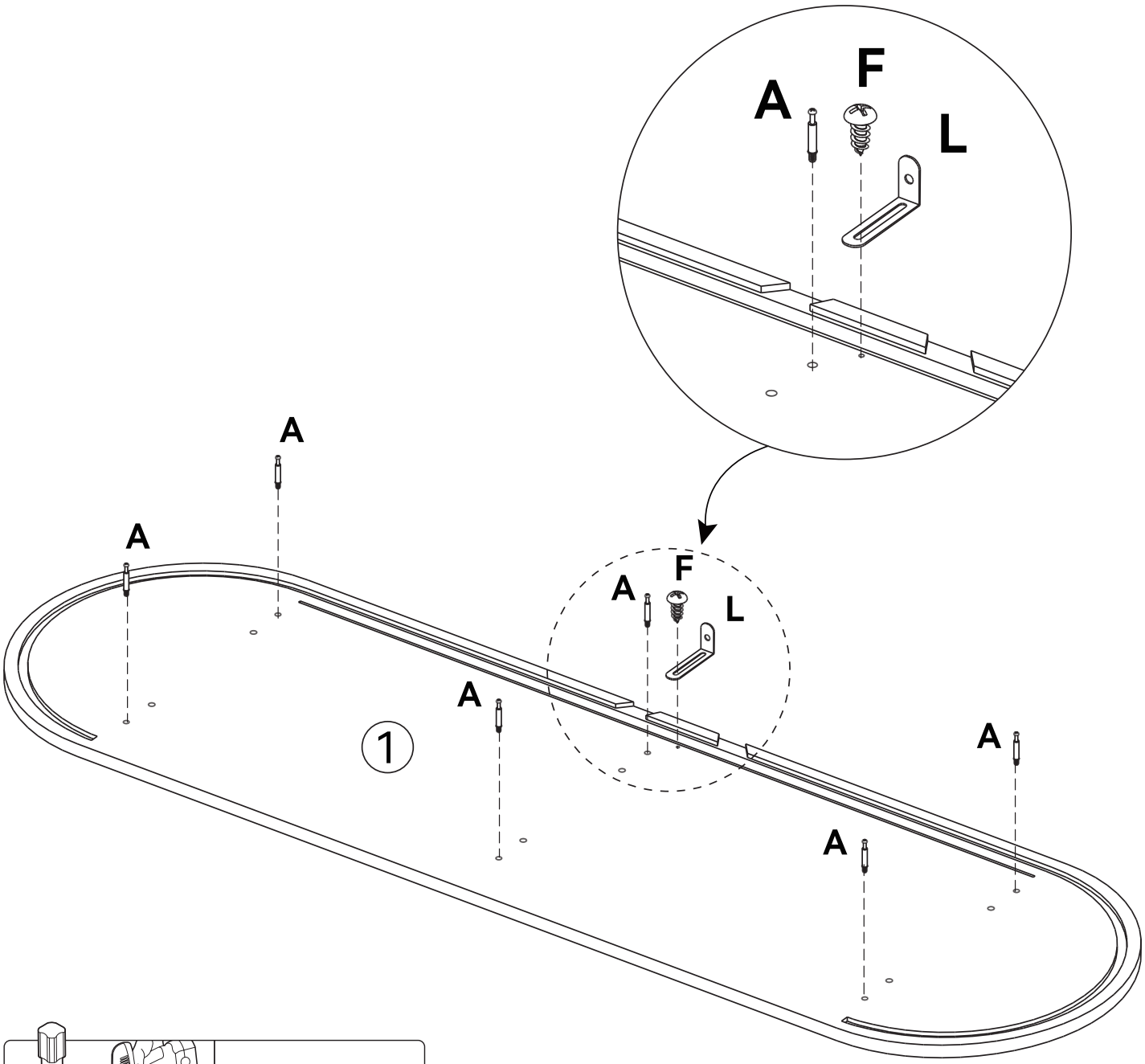

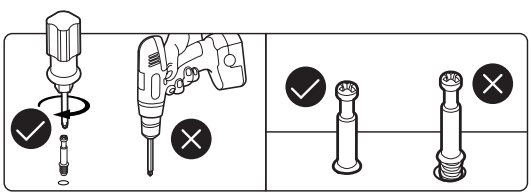

2

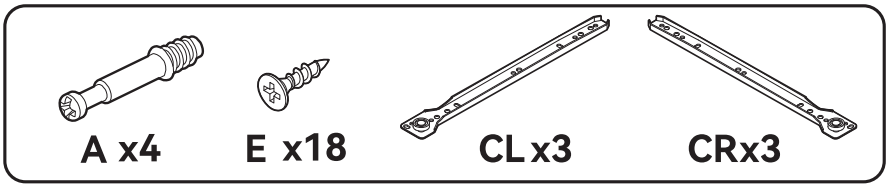

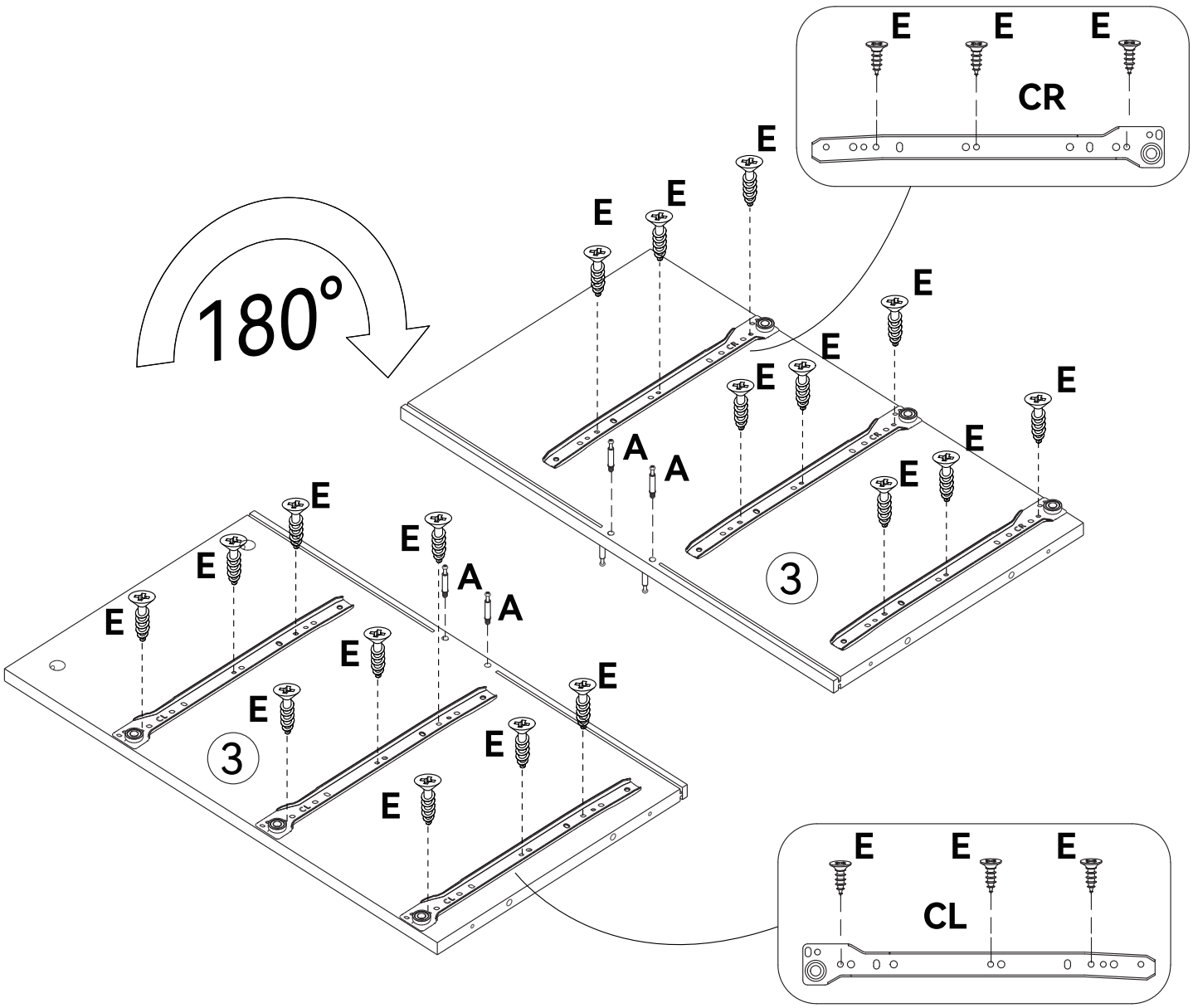

3

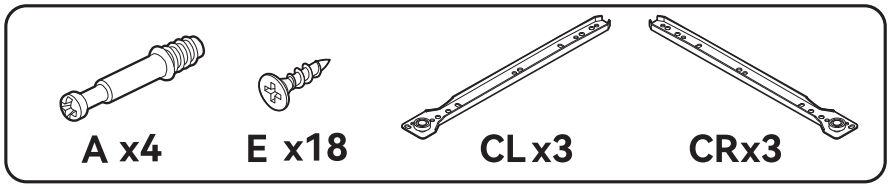
A x4
E x18
CL x3
CRx3

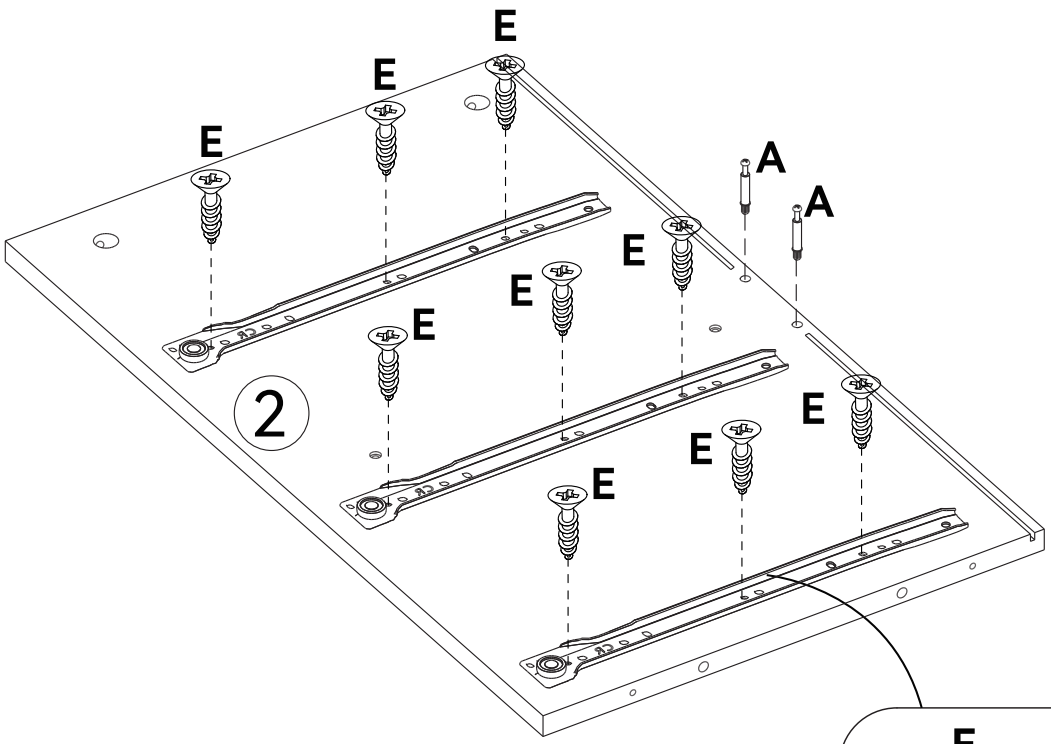
E
E
E
A
A
E
E
E
E
E
E
E
2

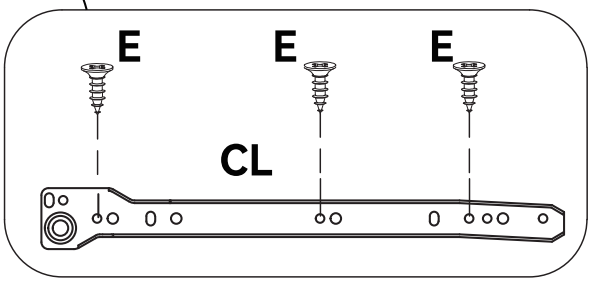
E
E
E
CL

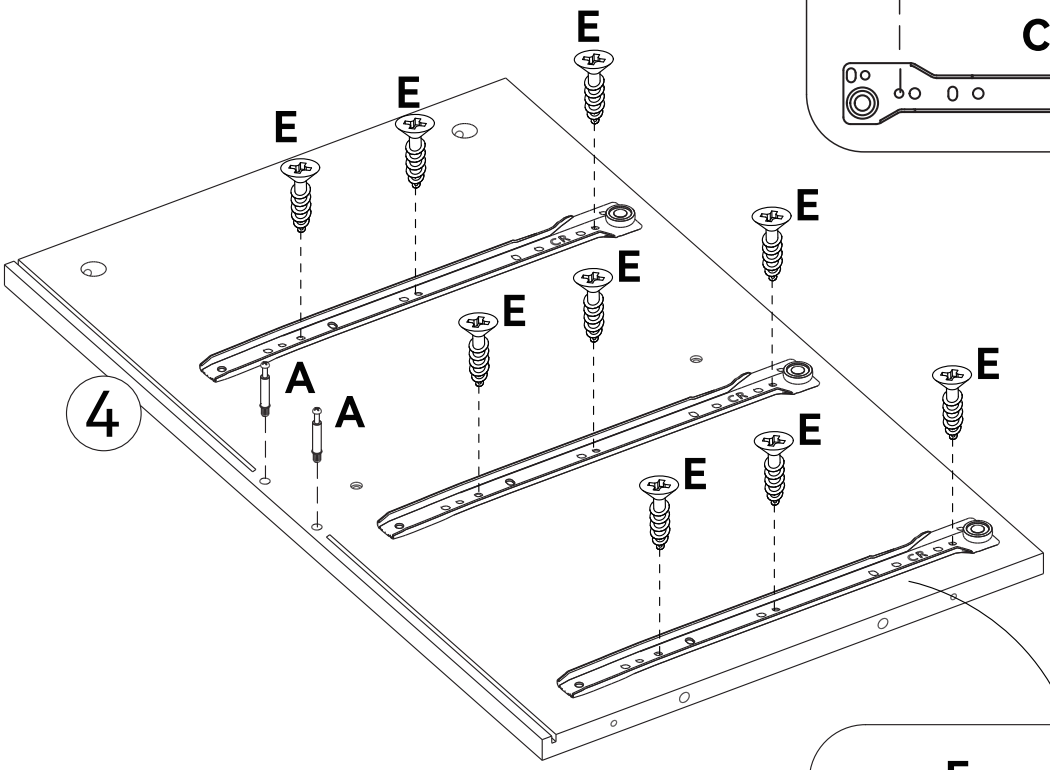
E
E
E
E
E
E
E
E
A
A
E
E
E
4

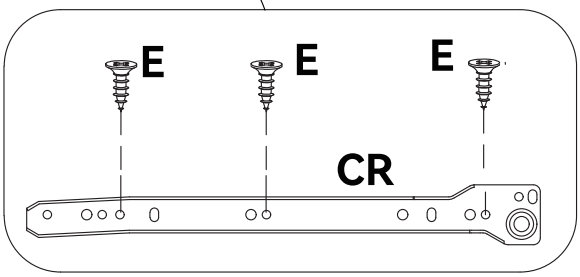
E
E
E
CR

4

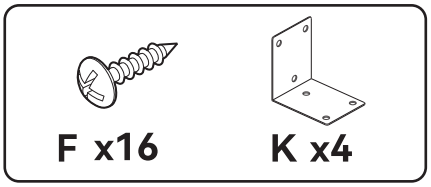

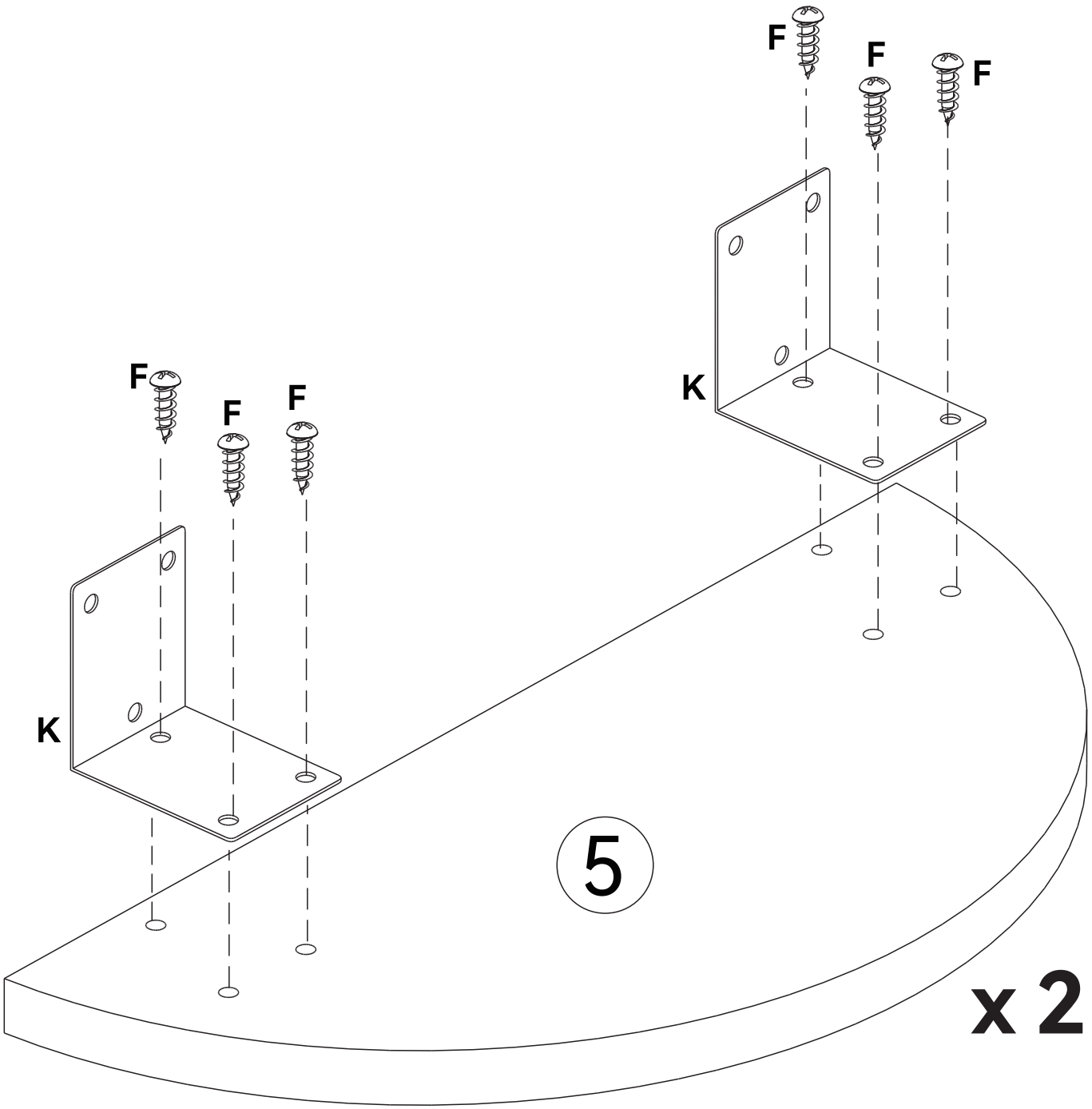

5

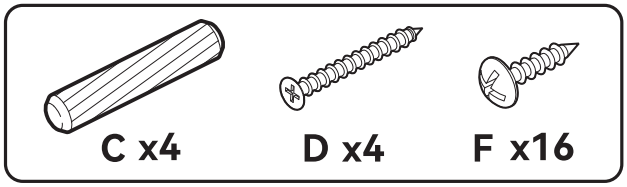

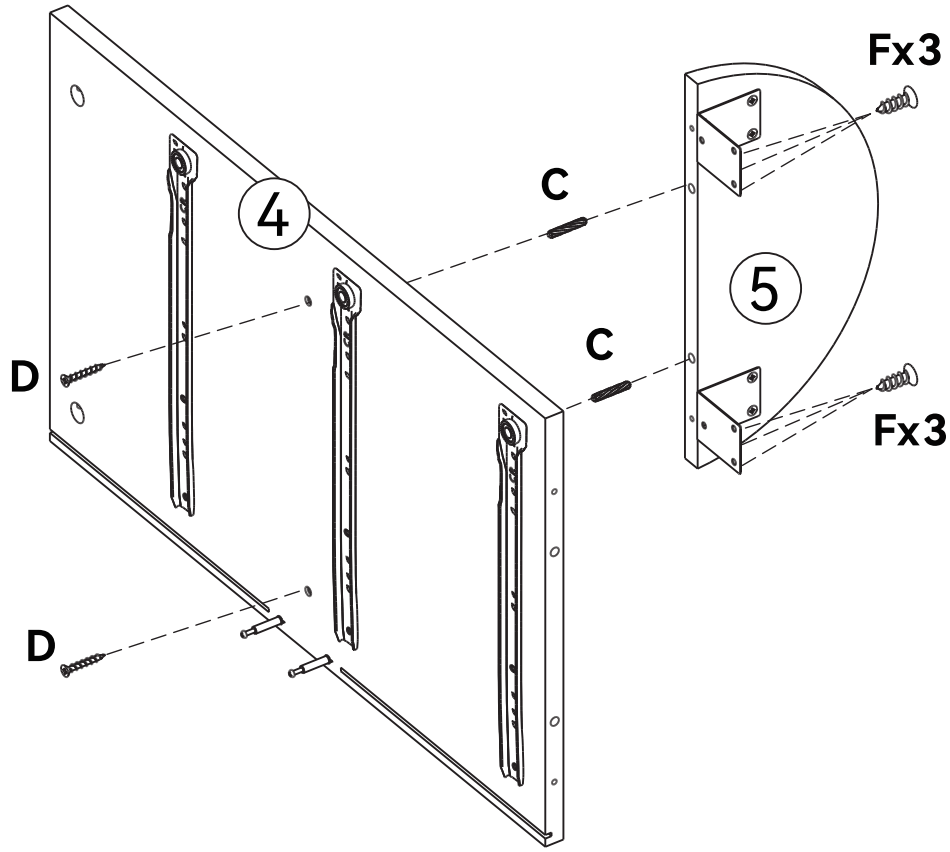

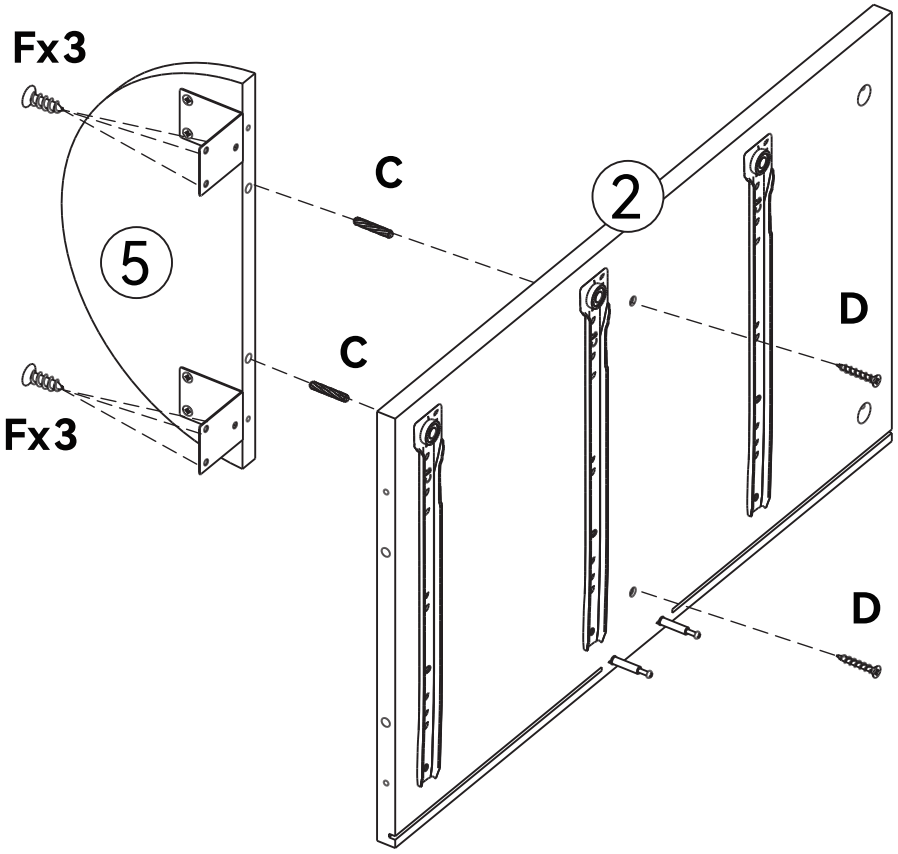

6

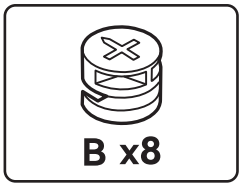

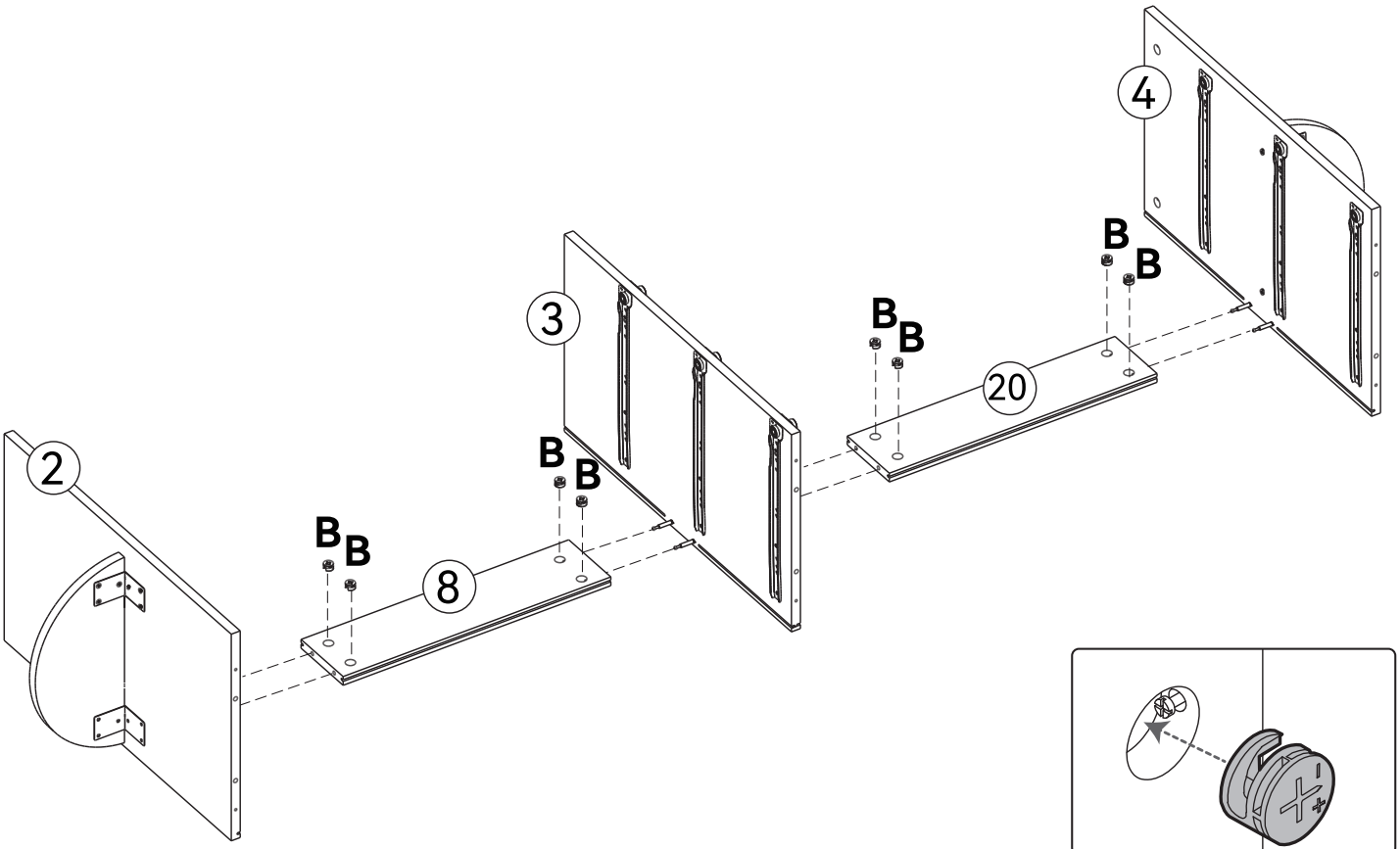

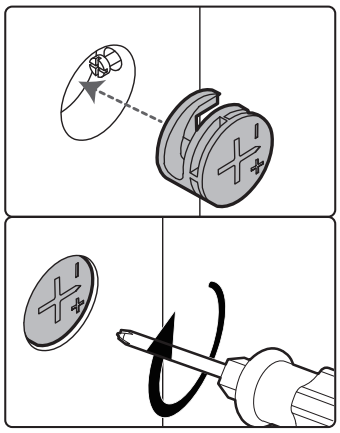

7

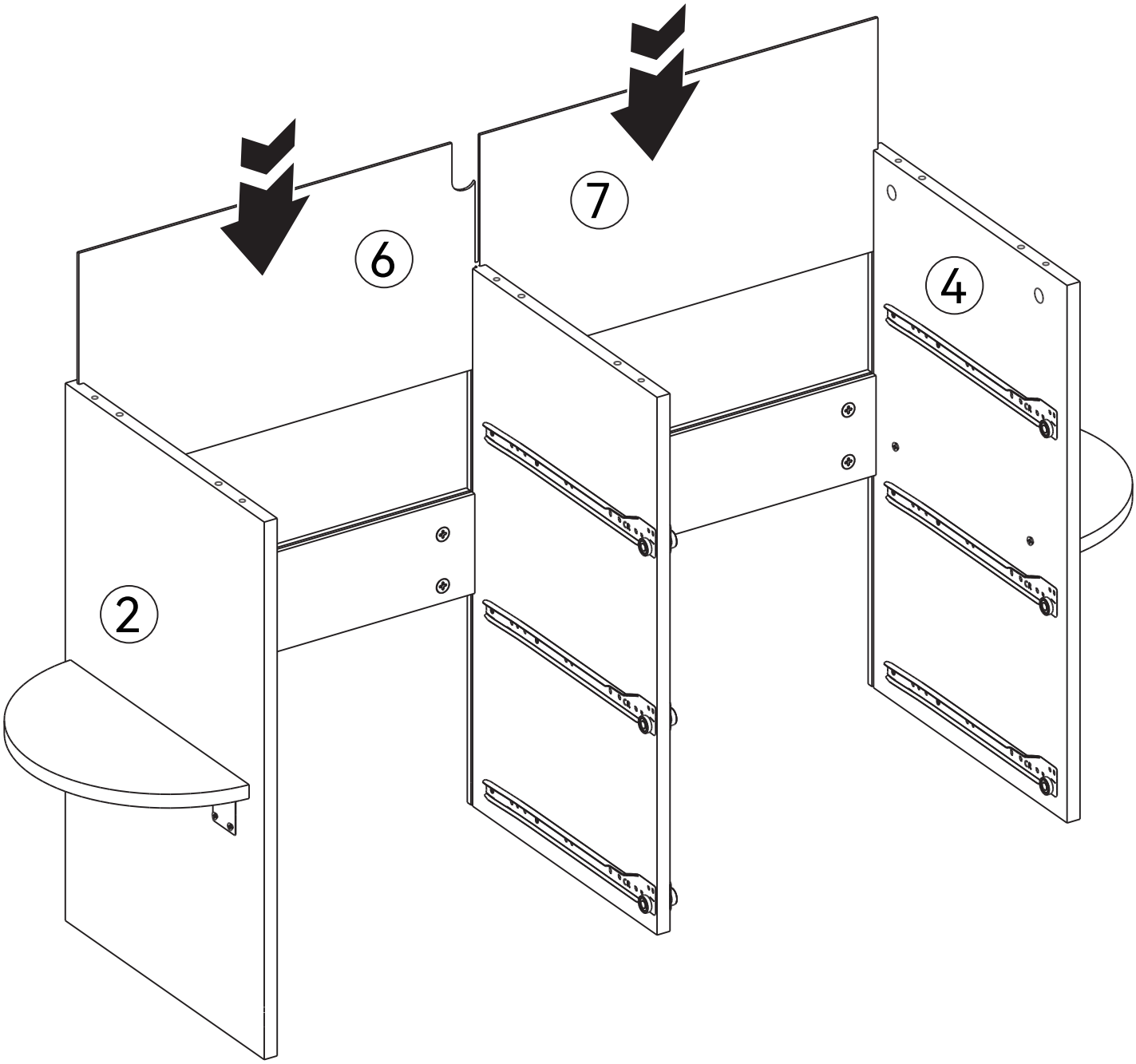

8

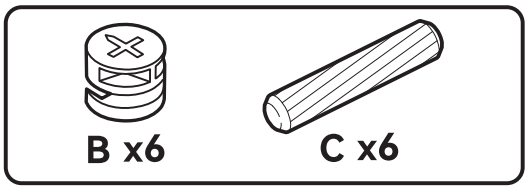

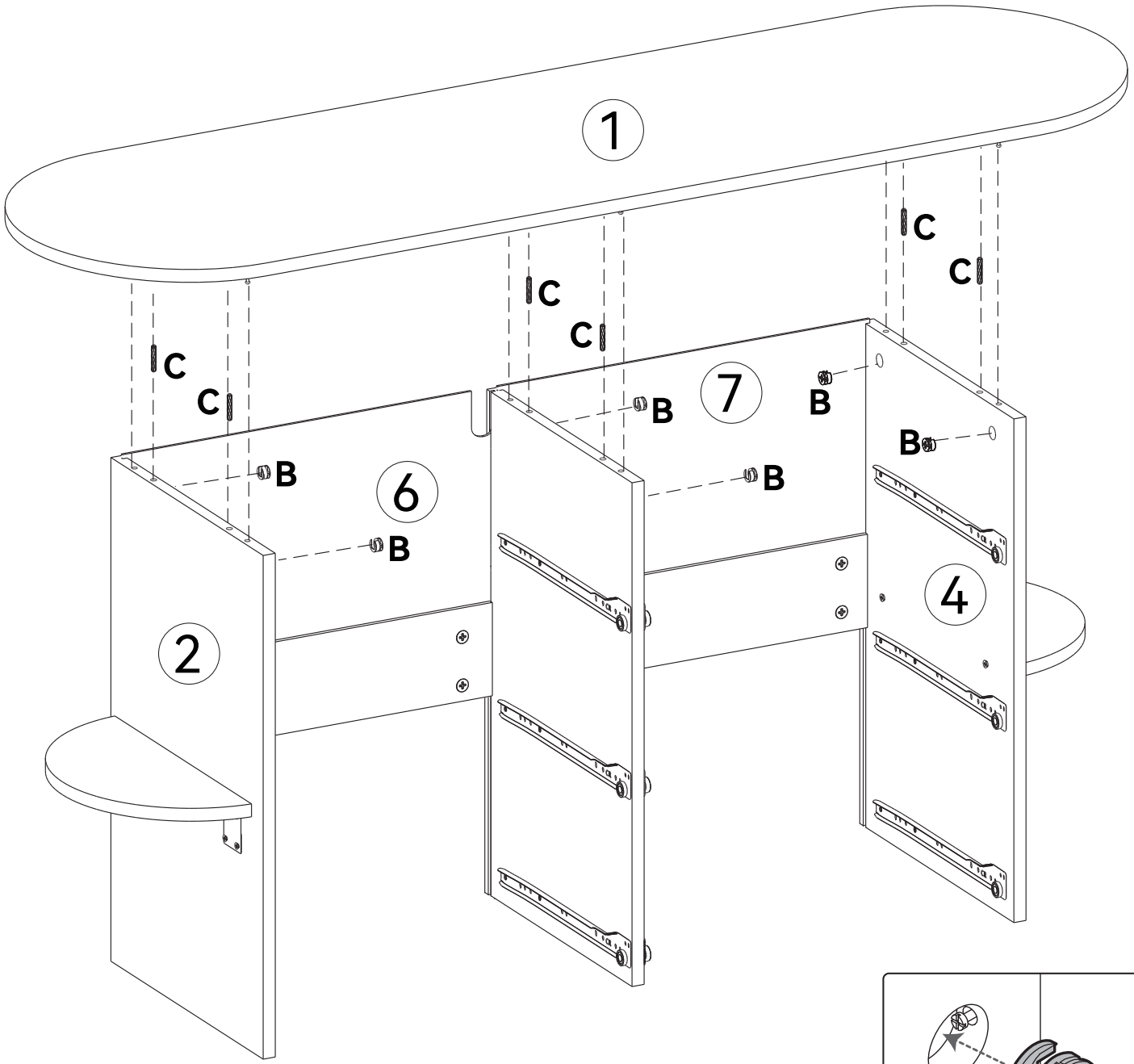

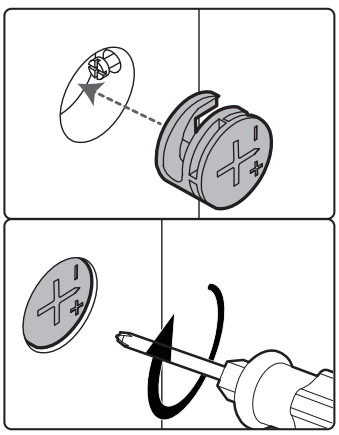

9

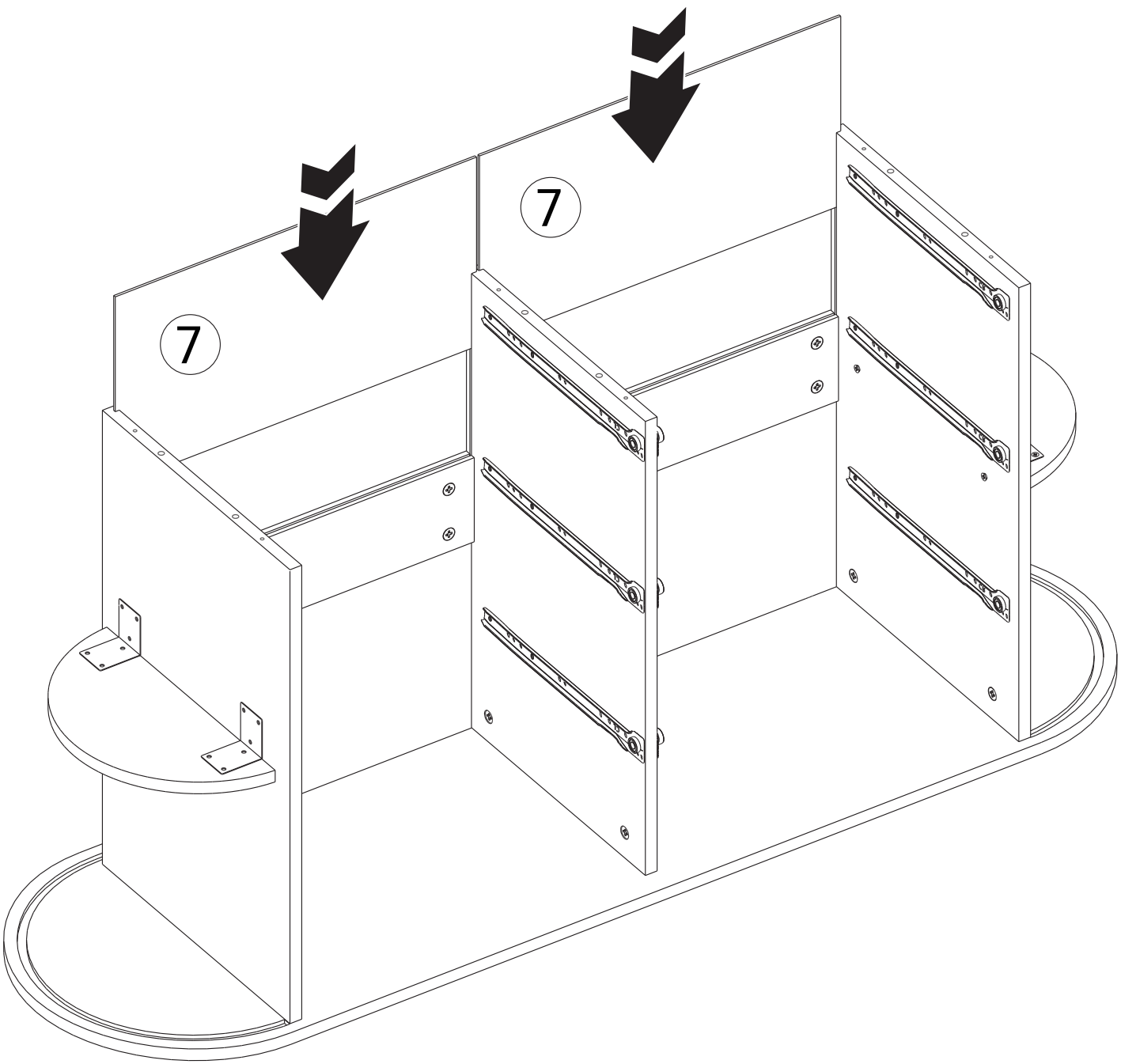

10

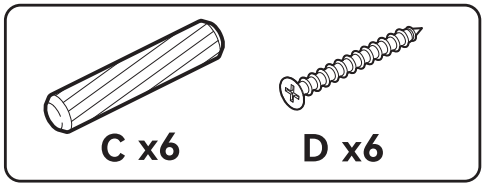

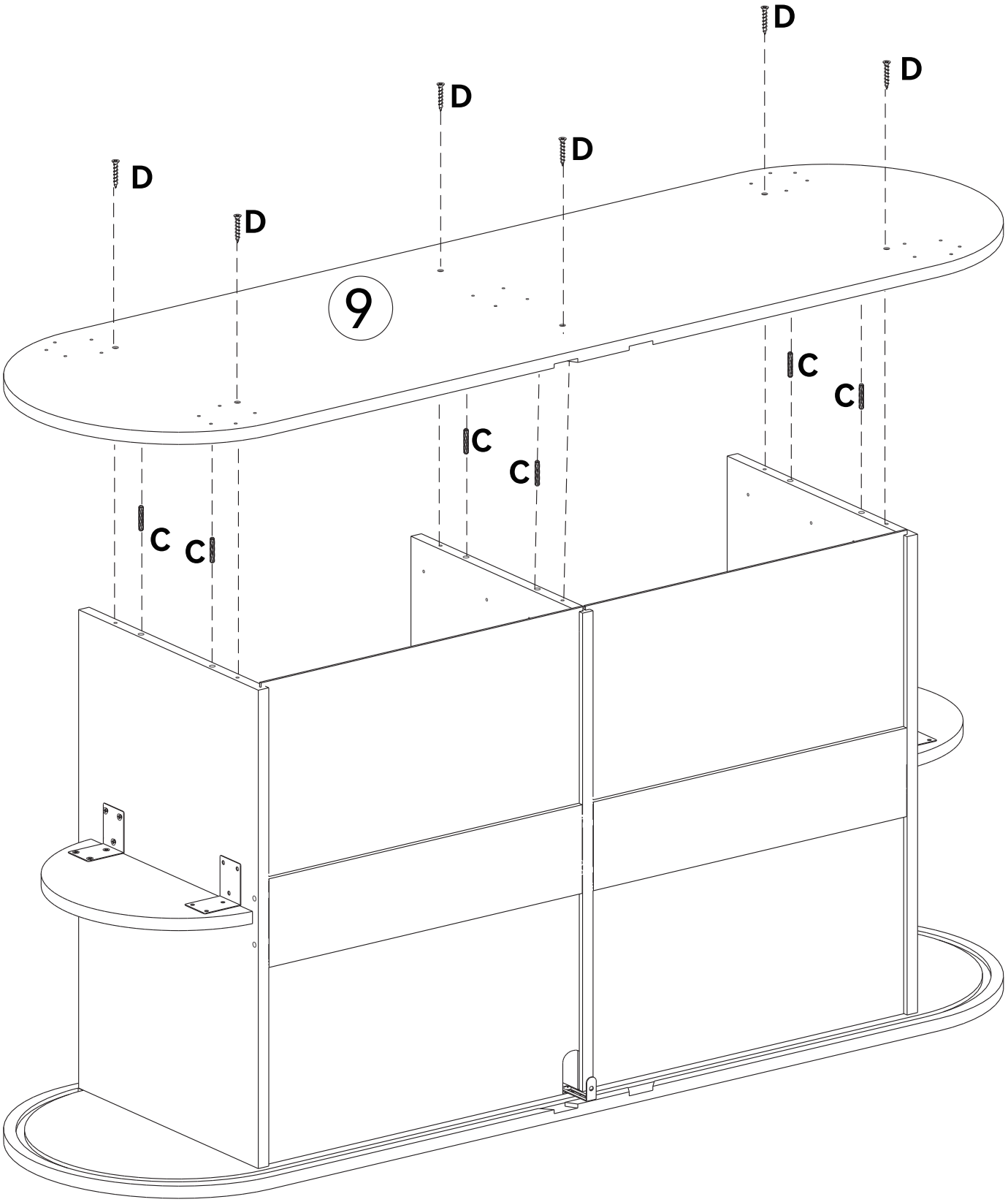

11

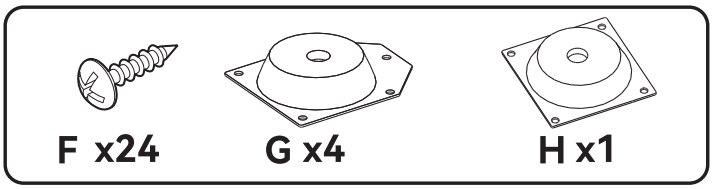

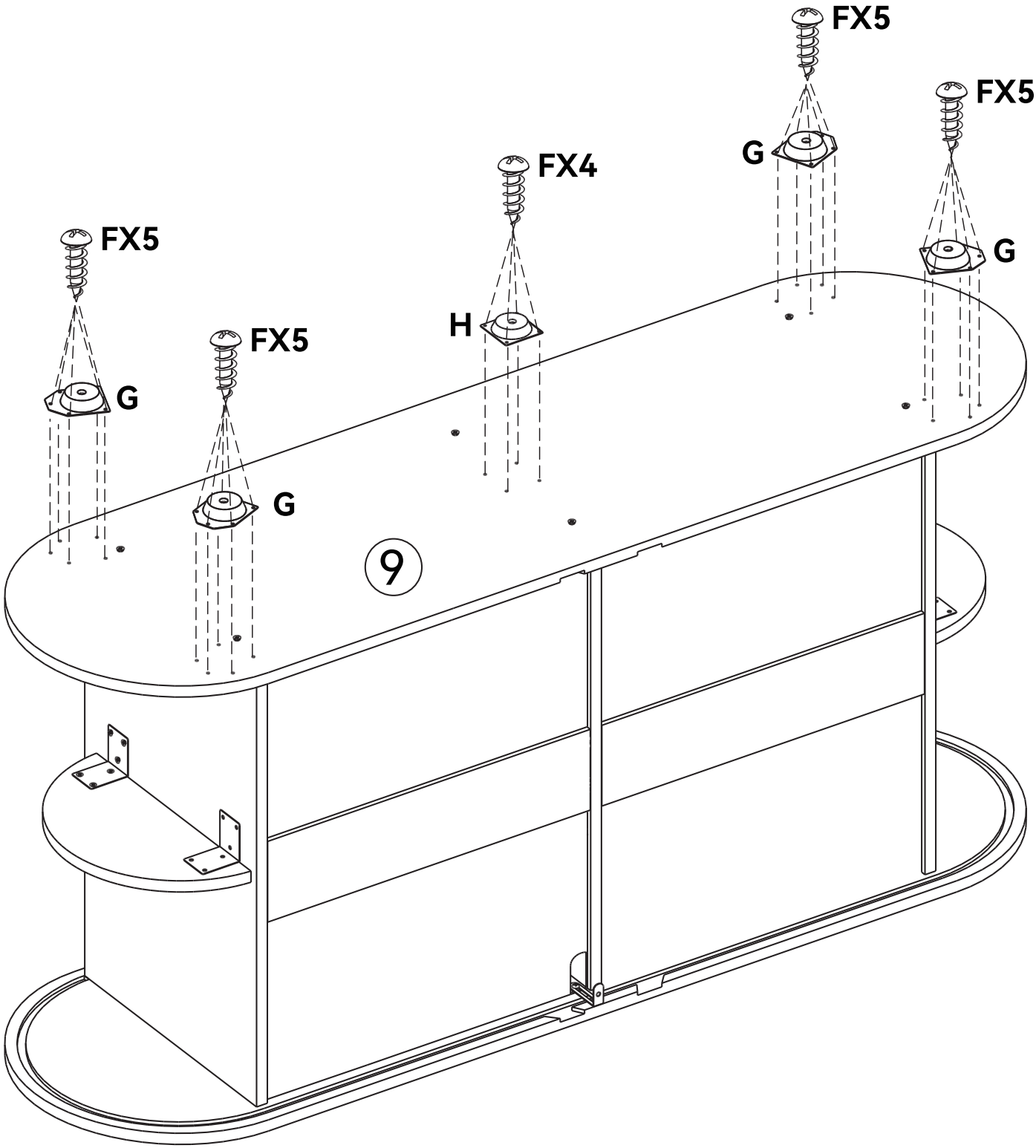

12

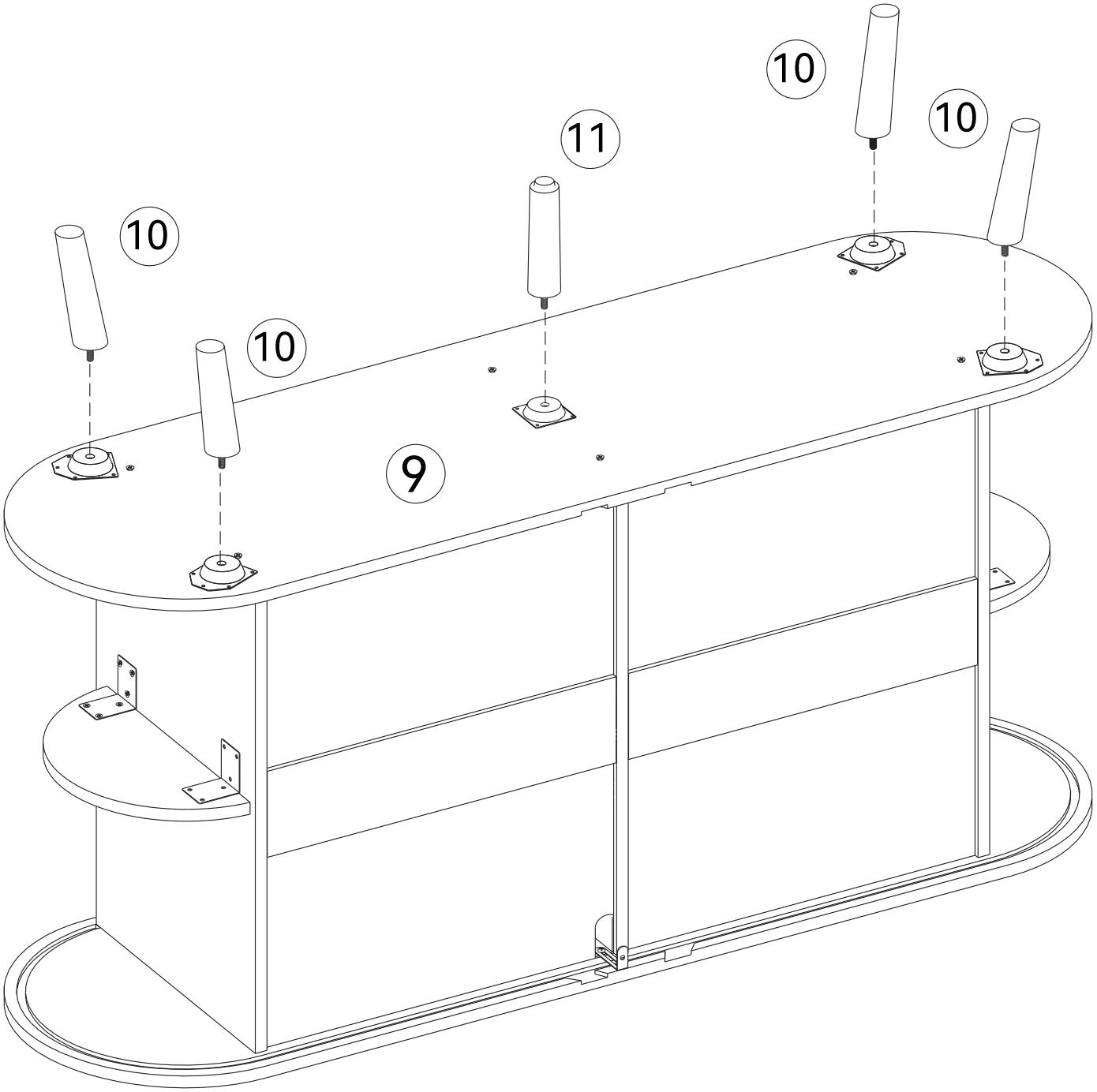

13

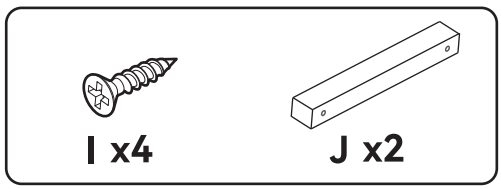

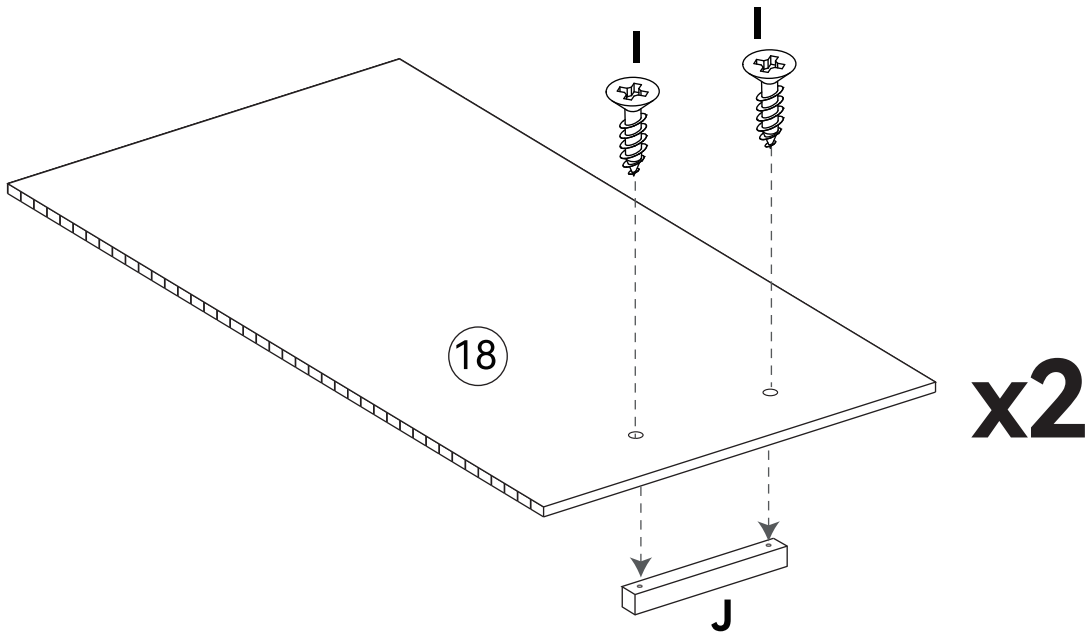

14



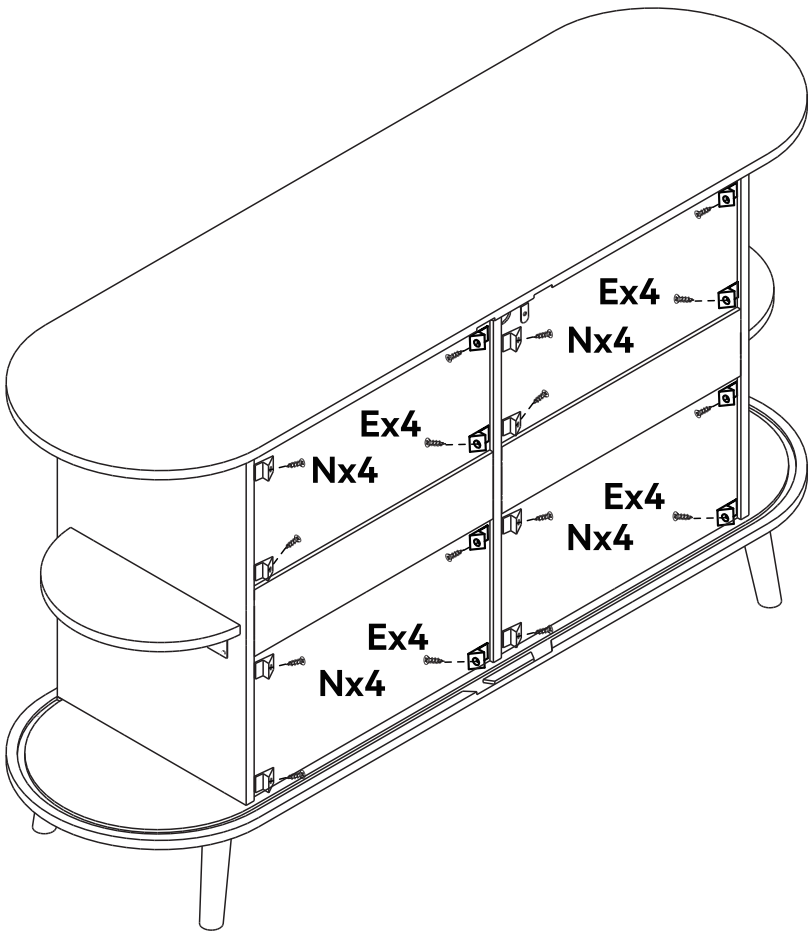

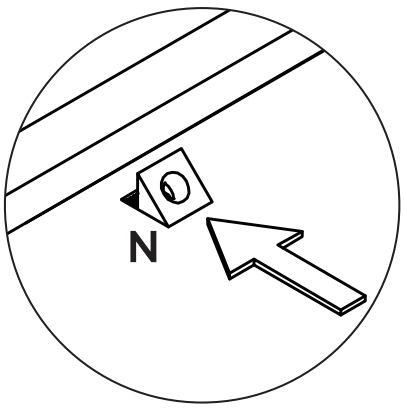

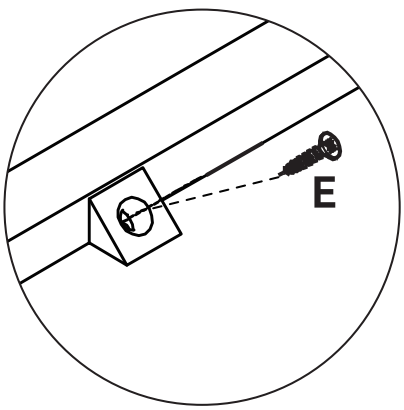

15

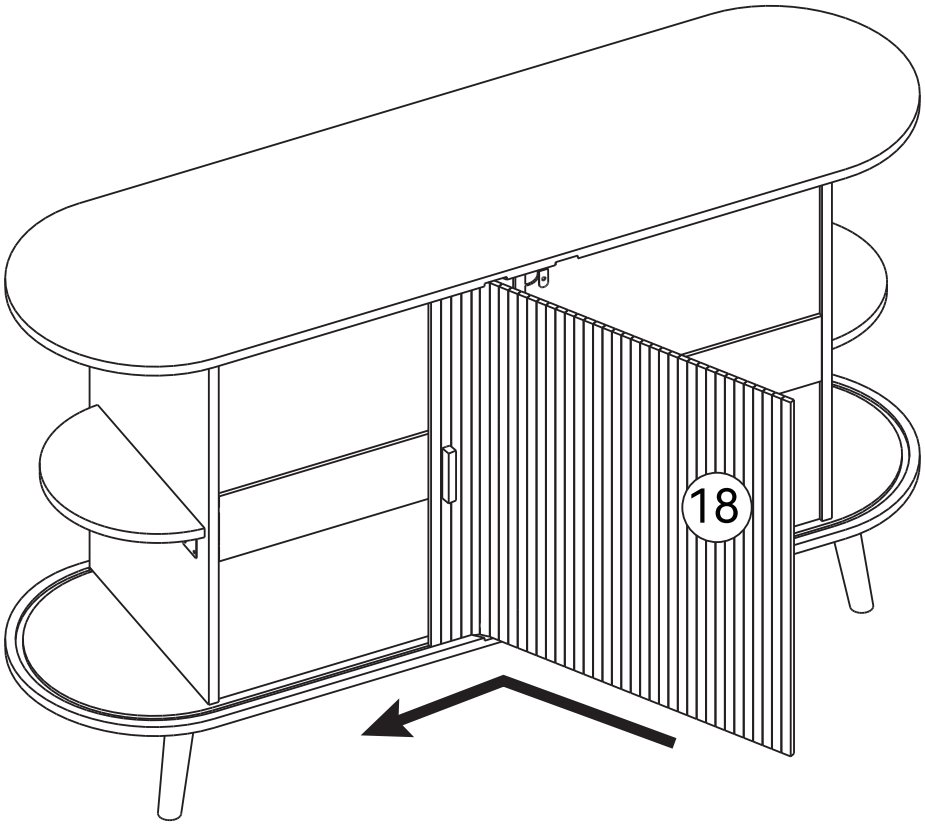

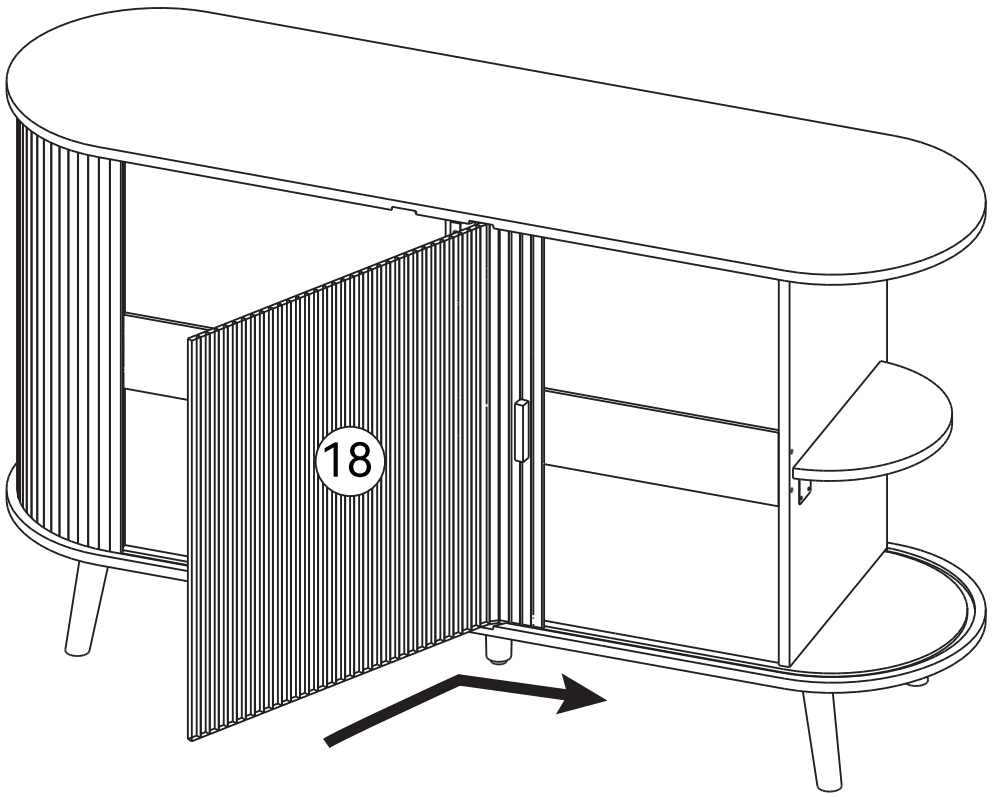

16

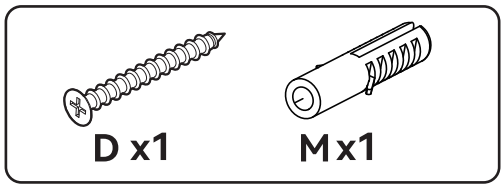

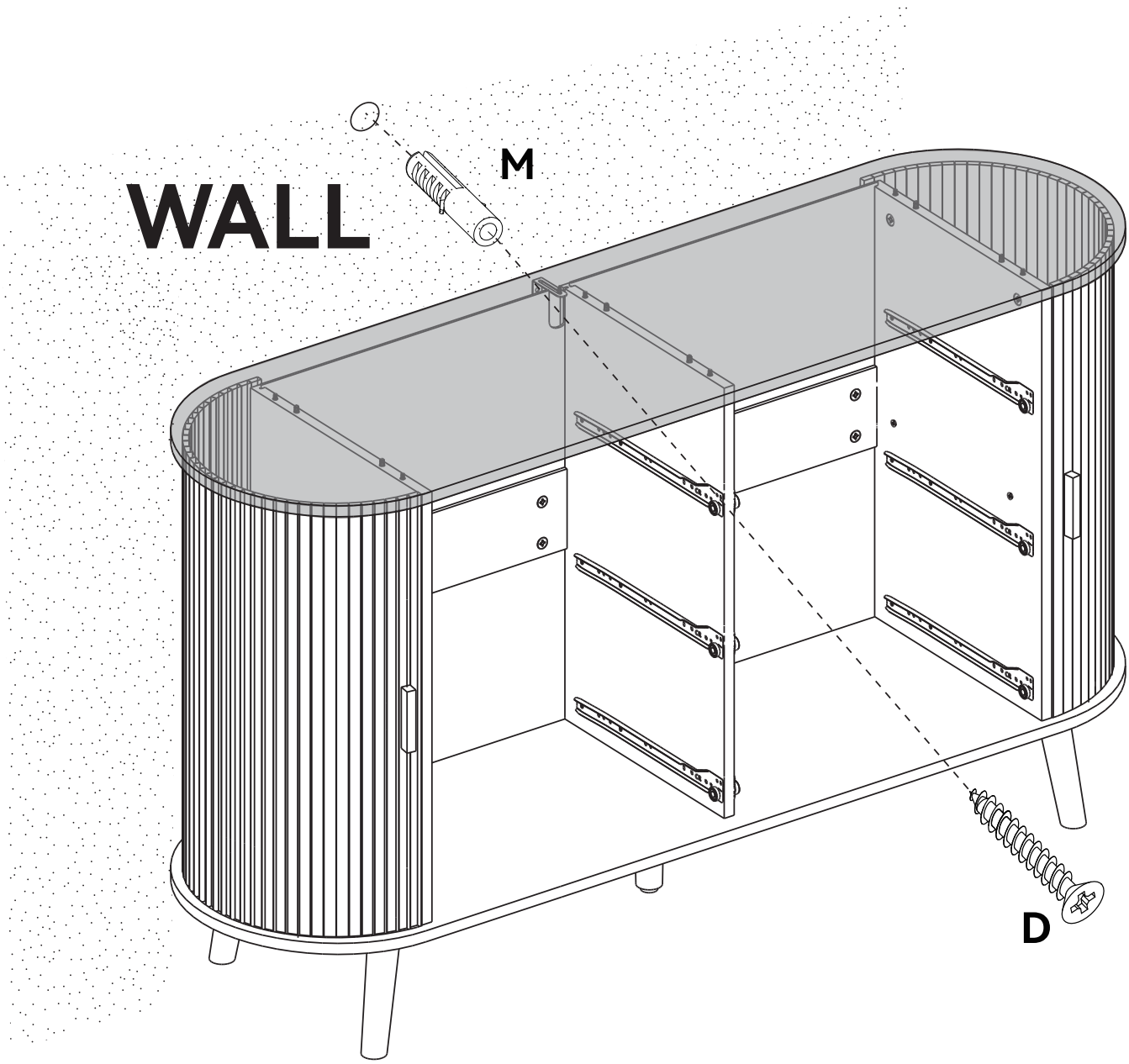

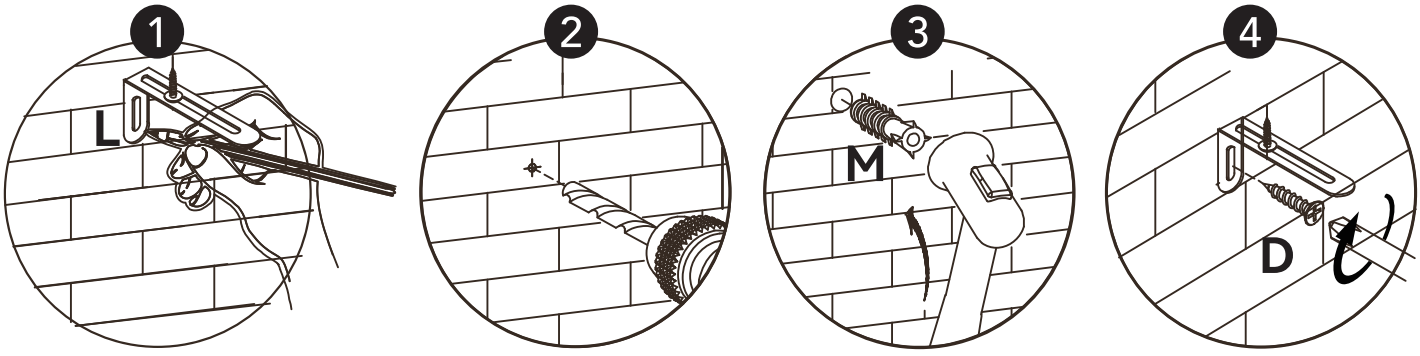

17

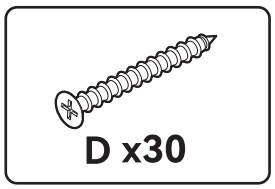

x6

18

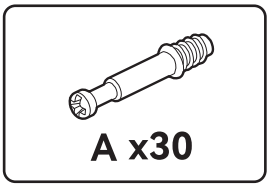

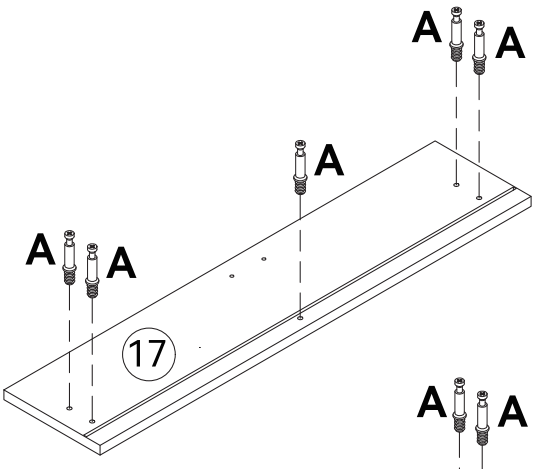

x3

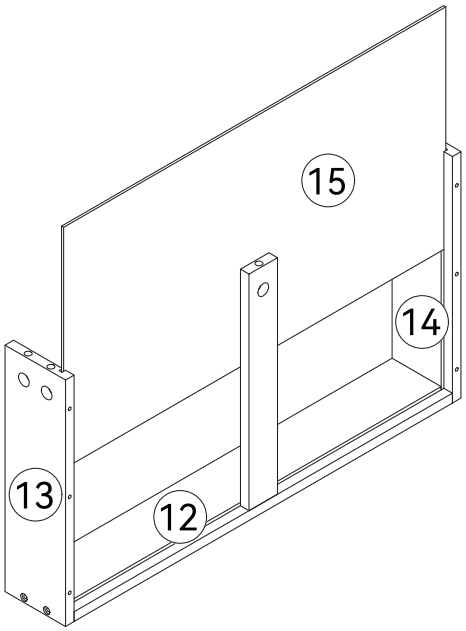

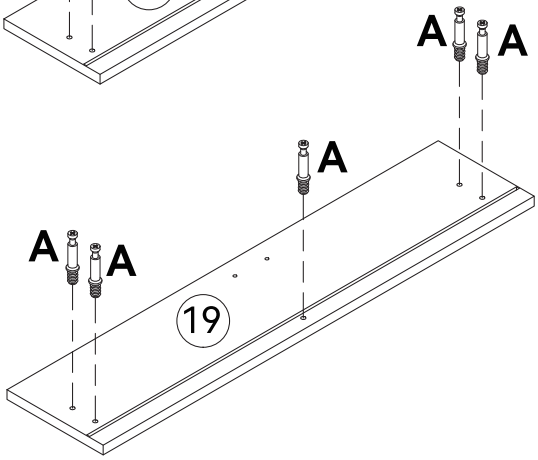

x3

19

B x30

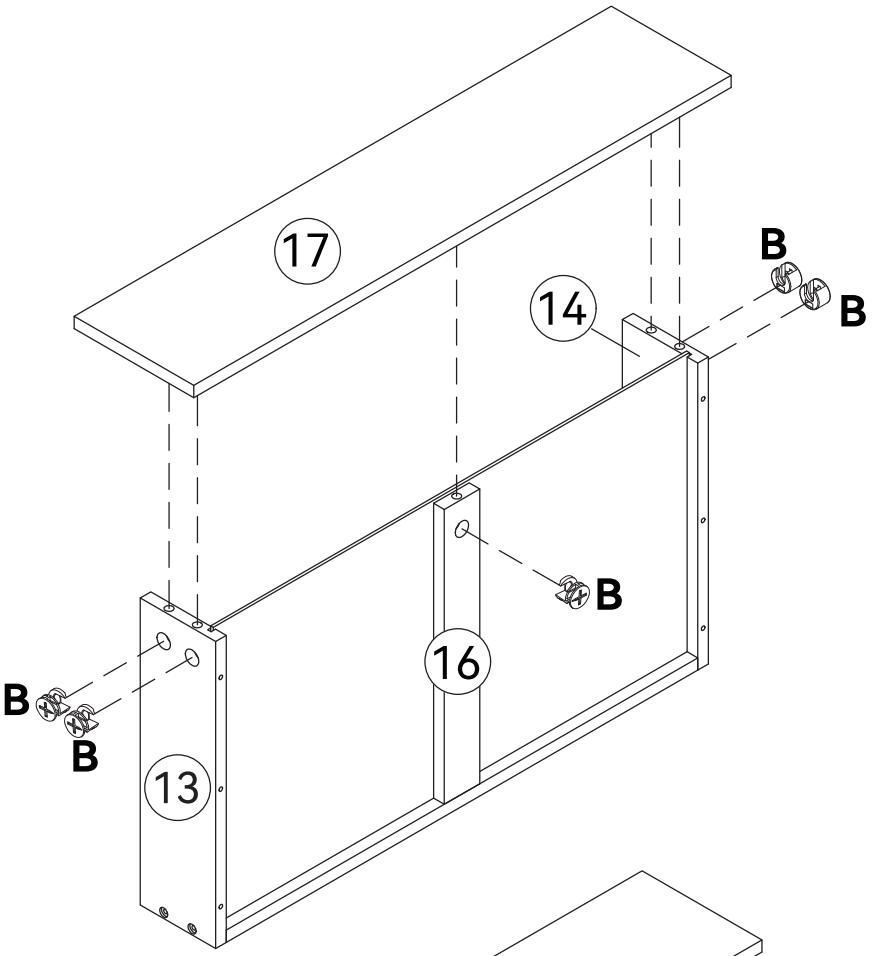

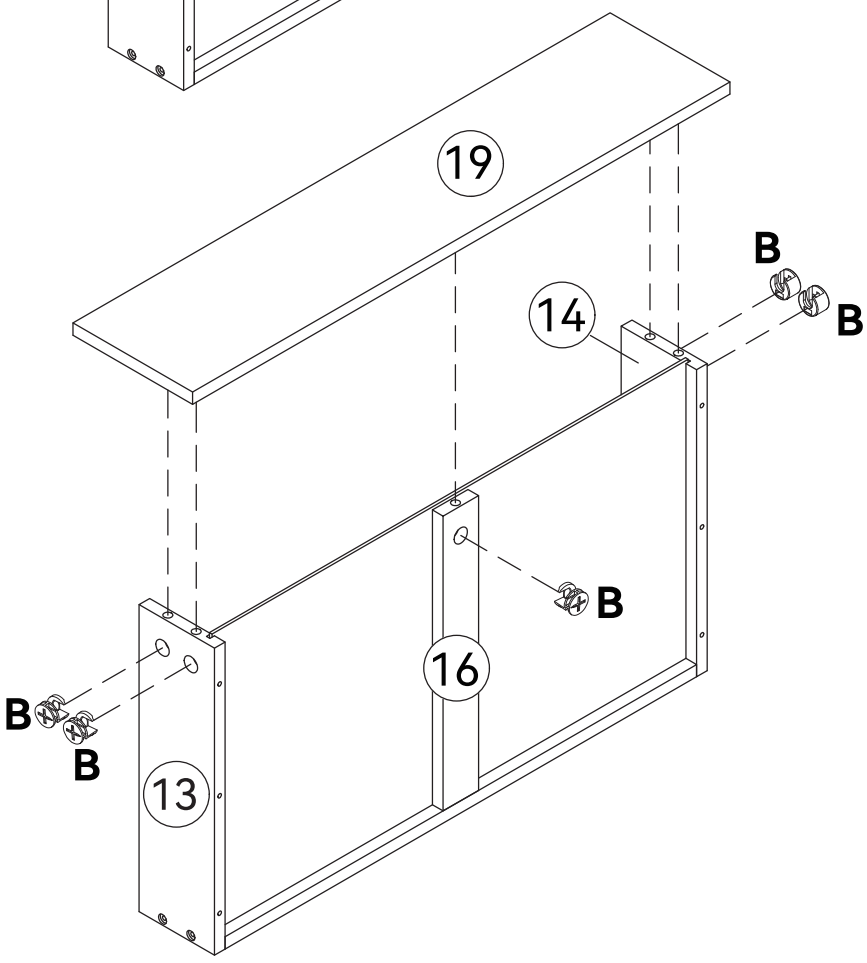

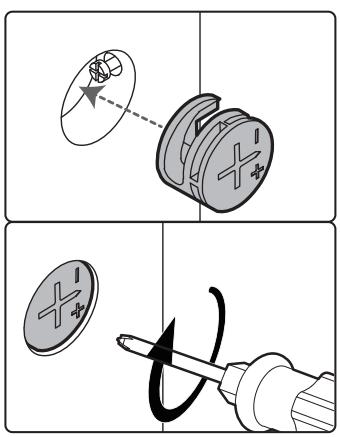

20

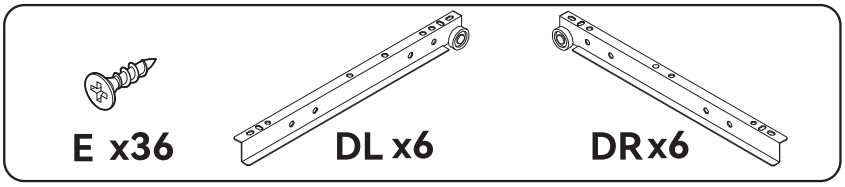
E x36
DL x6
DR x6

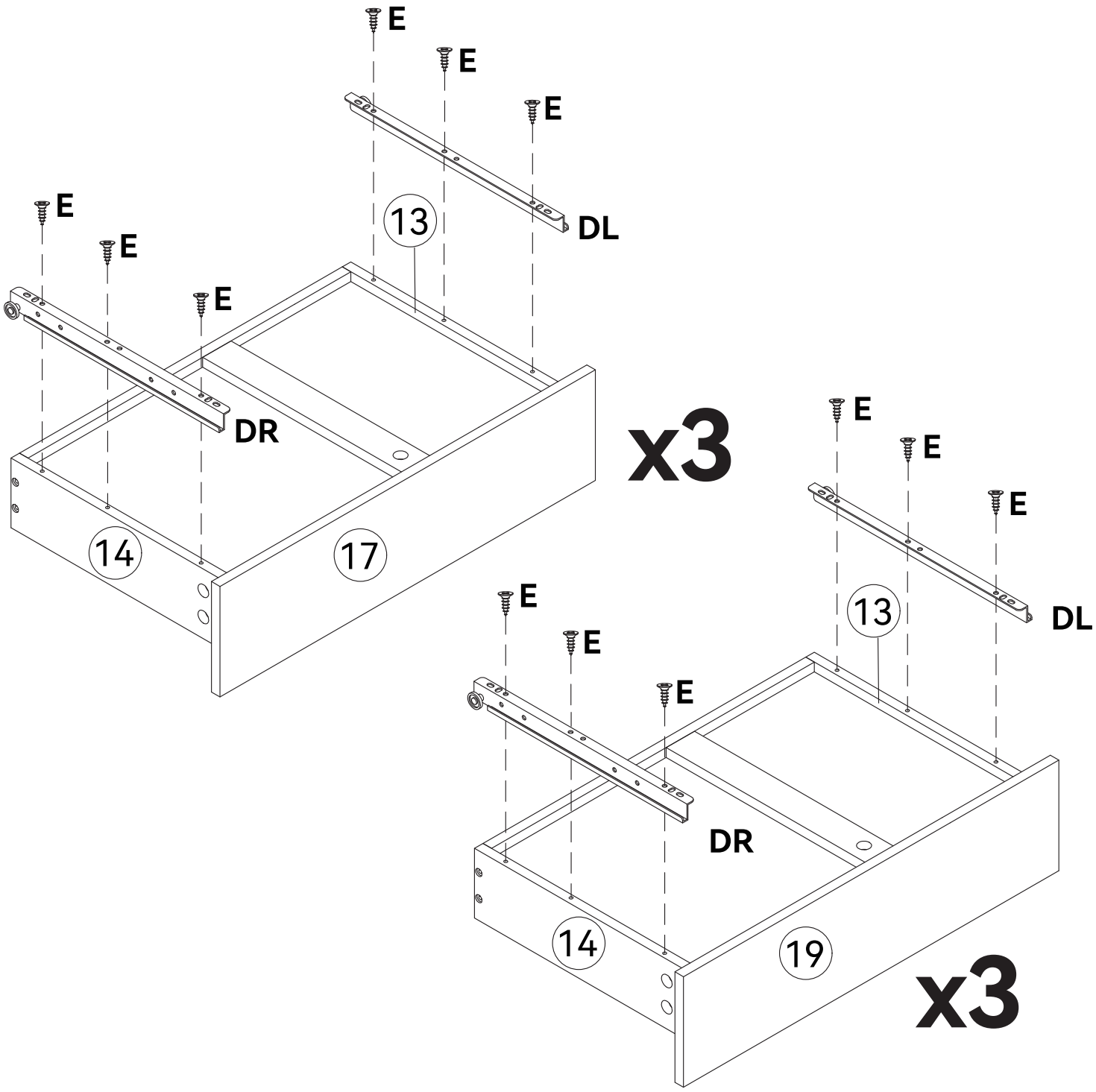
E
E
E
13
DL
E
E
E
DR
14
17
x3
E
E
E
13
DL
E
E
E
DR
14
19
x3

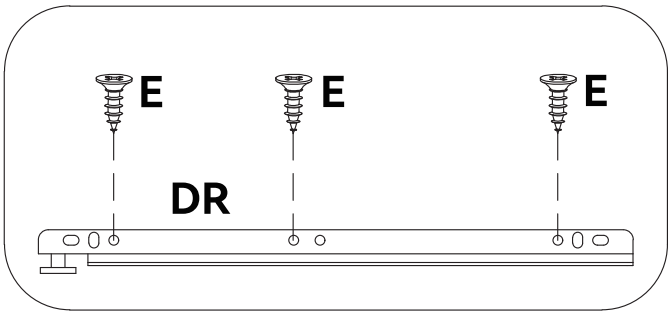
E
E
E
DR

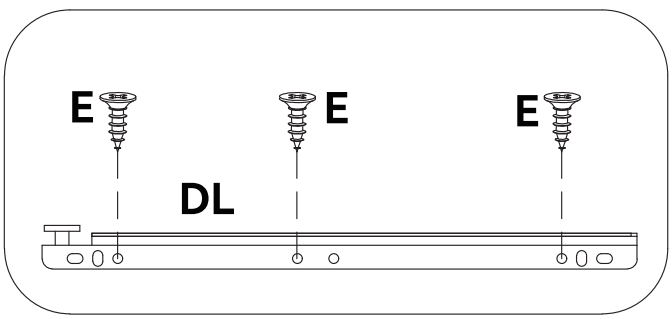
E
E
E
DL

21

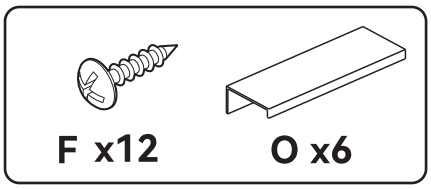

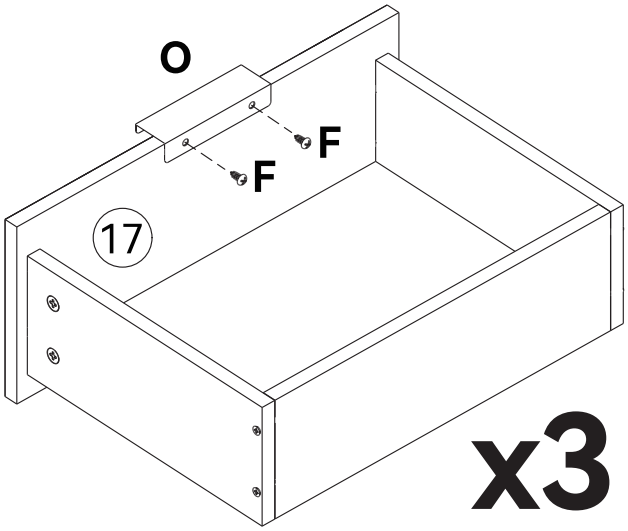

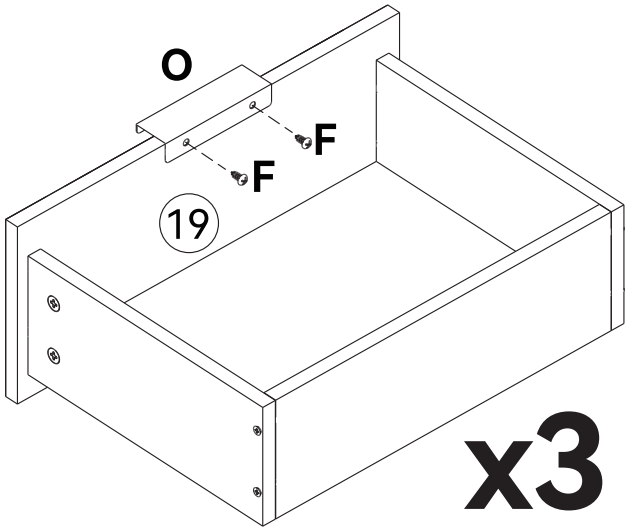

22

