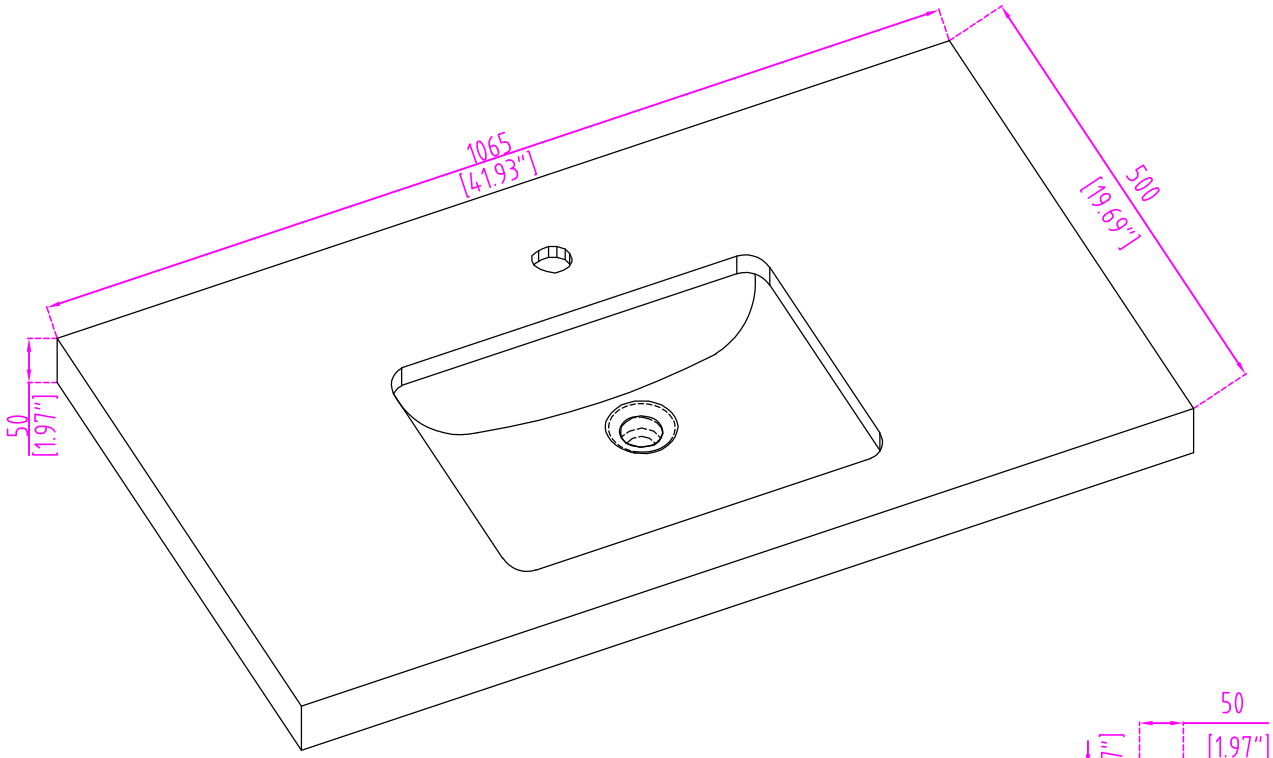
1065
[41.93"]
500
[19.69"]
50
[1.97"]

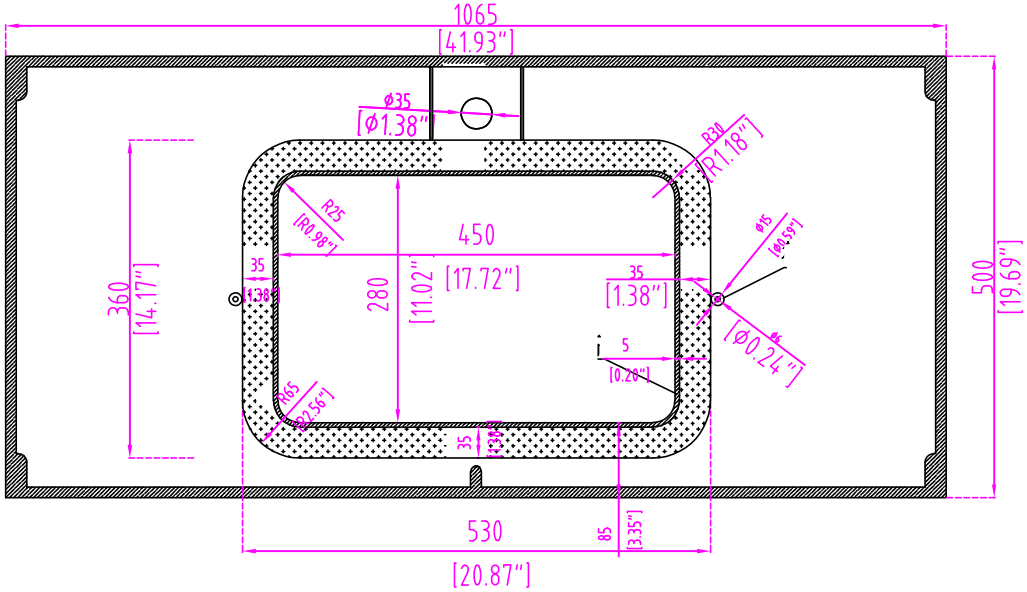
1065
[41.93"]
Ø35
[Ø1.38"]
R30
[R1.18"]
R25
[R0.98"]
450
[17.72"]
280
[11.02"]
360
[14.17"]
35
[1.38"]
35
[1.38"]
Ø15
[Ø0.59"]
Ø6
[Ø0.24"]
5
[0.28"]
R65
[R2.56"]
35
[1.38"]
500
[19.69"]
530
[20.87"]
85
[3.35"]

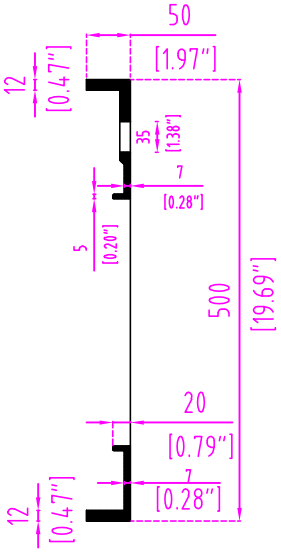
50
[1.97"]
12
[0.47"]
35
[1.38"]
7
[0.28"]
5
[0.20"]
500
[19.69"]
20
[0.79"]
7
[0.28"]
12
[0.47"]

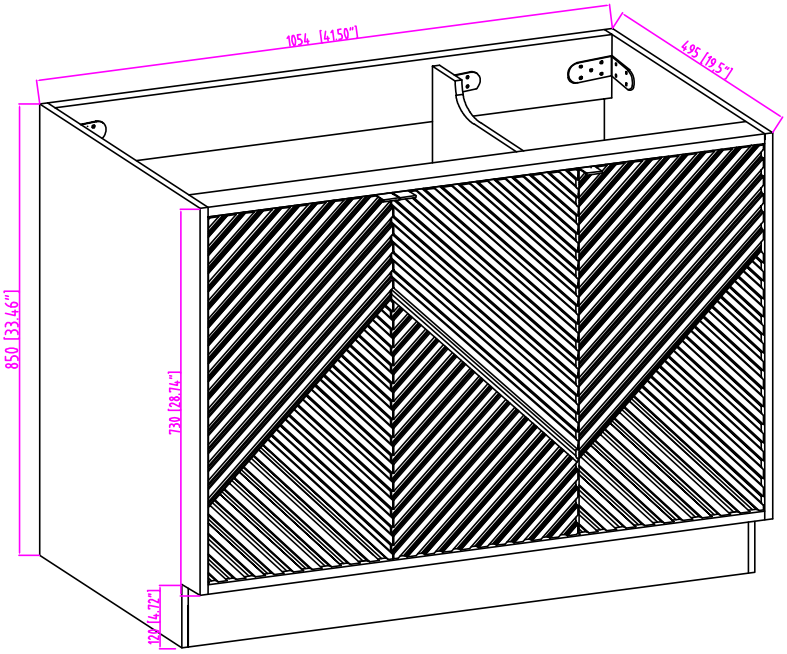
1054 [41.50"]
495 [19.5"]
850 [33.46"]
730 [28.74"]
120 [4.72"]

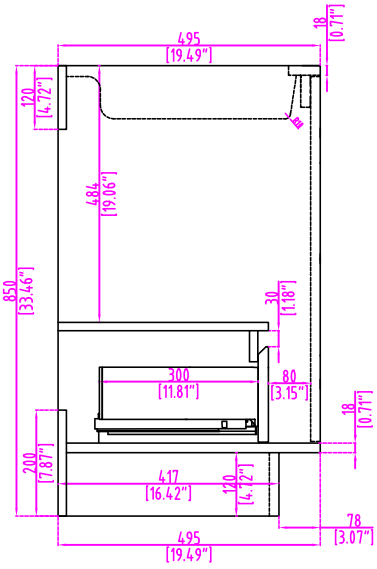
495
[19.49"]
18
[0.71"]
120
[4.72"]
484
[19.06"]
850
[33.46"]
30
[1.18"]
300
[11.81"]
80
[3.15"]
18
[0.71"]
200
[7.87"]
417
[16.42"]
120
[4.72"]
78
[3.07"]
495
[19.49"]

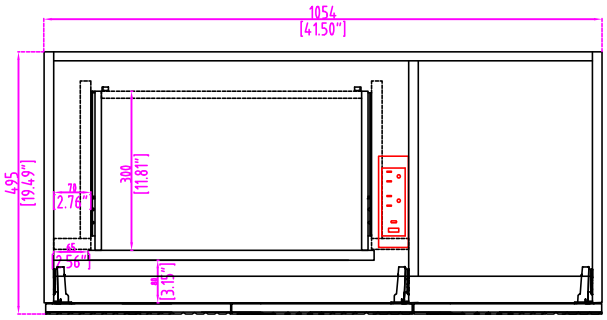
1054
[41.50"]
495
[19.49"]
70
2.76"
300
[11.81"]
65
[2.56"]
80
[3.15"]

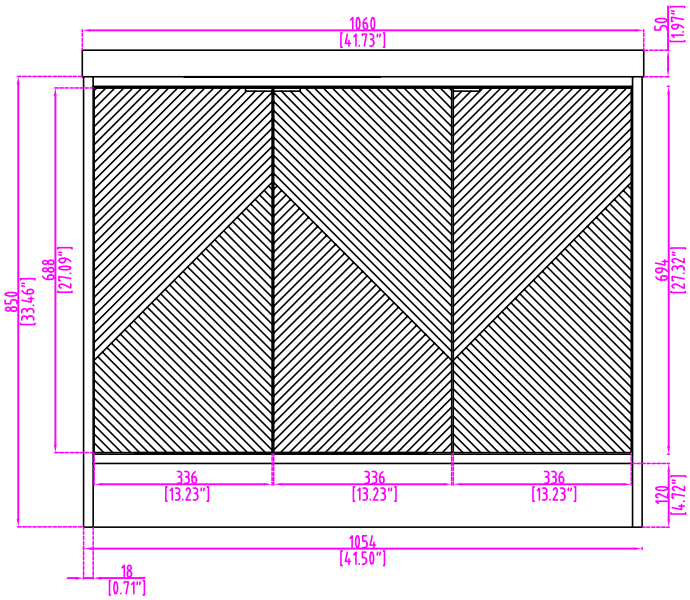
1060
[41.73"]
50
[1.97"]
850
[33.46"]
688
[27.09"]
694
[27.32"]
336
[13.23"]
336
[13.23"]
336
[13.23"]
120
[4.72"]
1054
[41.50"]
18
[0.71"]

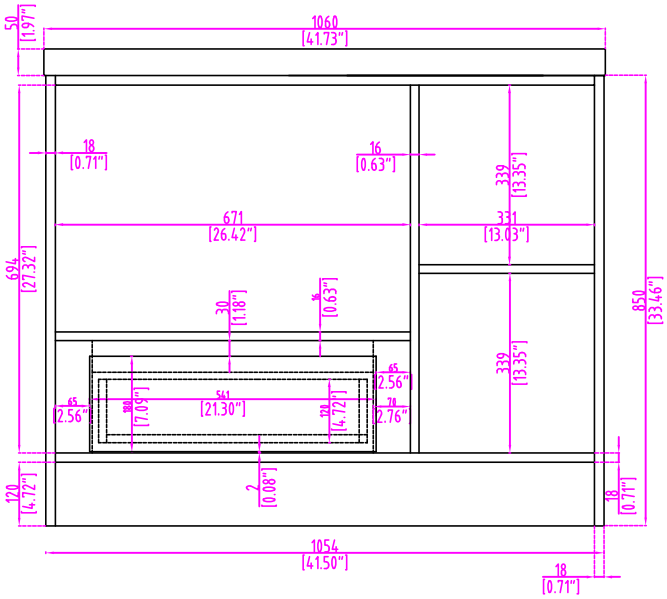
50
[1.97"]
1060
[41.73"]
18
[0.71"]
16
[0.63"]
339
[13.35"]
671
[26.42"]
331
[13.03"]
694
[27.32"]
30
[1.18"]
16
[0.63"]
850
[33.46"]
339
[13.35"]
65
[2.56"]
65
[2.56"]
180
[7.09"]
541
[21.30"]
120
[4.72"]
70
[2.76"]
120
[4.72"]
2
[0.08"]
18
[0.71"]
1054
[41.50"]
18
[0.71"]

MT-FS42L