Assembly Instructions

Caution: You must read this before you proceed

Case & Maintenace

⊘	Not for commercial use. For residential use only.
✓	Furniture may scratch floors. We recommend using furniture pads to protect your floors.
⊘	Do not put hot items directly on furniture surface.
⊘	Do not clean furniture with hasrsh cleansers or polish.
⊘	Do not place furniture under direct sunlight.
⊘	Do not write on furniture near heating or cooling vents.
⊘	Do not write on furniture without a padded barrier to protect the surface.
⊘	Do not place furniture outside for indoor use only
⊘	Stains may be removed with mild soap solution and damp cloth.
⊘	Children should not climb or jump on the furniture.
✓	Dust and pick-upspills using a clean, non-colored,lint-free cloth.

Please look in the box for hardware packs and legs.

Sets often ship in multiple boxes and may arrive a day or two apart.

Queen Bed

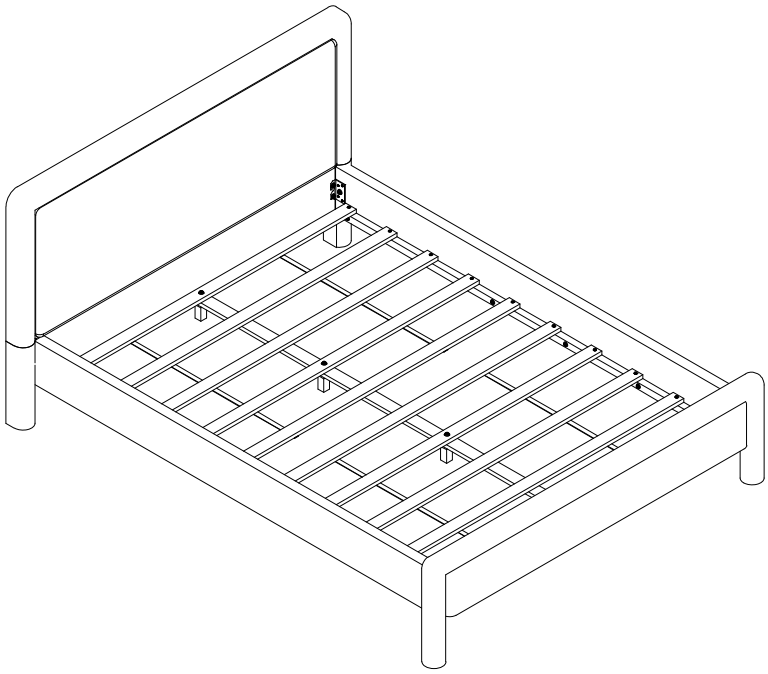

N736P425847

Part List

Label	Picture	Description	QTY
1	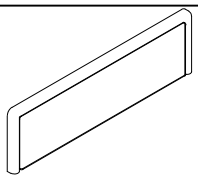	Headboard	1
2	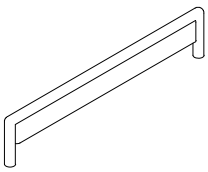	Footboard	1
5	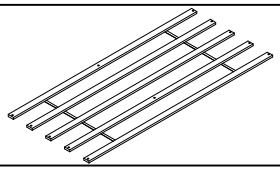	Slats	2
8	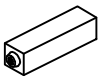	Center Support Leg	4
9	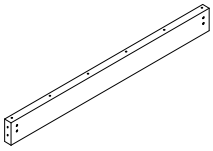	Headboard Below	1
10		Headboard Below Leg	2

Part List

Label	Picture	Description	QTY
3	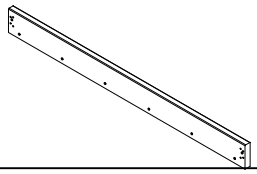	Side Rail(R)	1
4	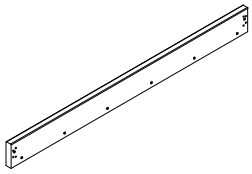	Side Rail(L)	1
6	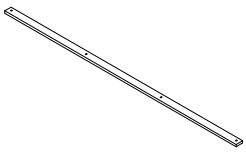	Middle Support Bar	1
7	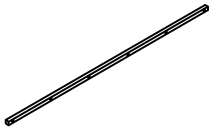	Support Rail	2

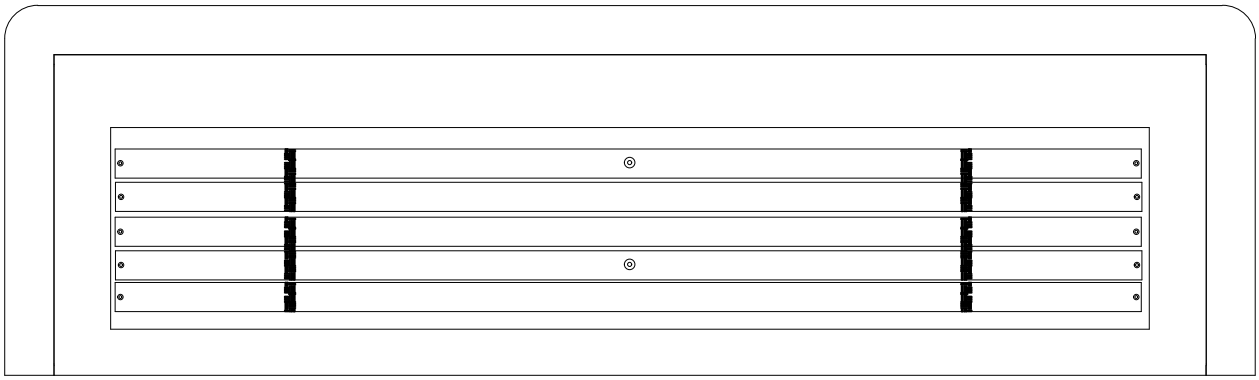

Noted: Slats (5) are packed behind the Headboard (1).

N736P425847

Hardware

Label	Picture	Description	QTY
A	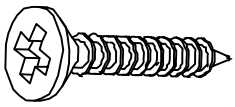	Screw(4x30mm)	36+1
B	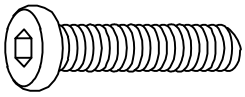	Bolts(5/16"x30mm)	12+1
C	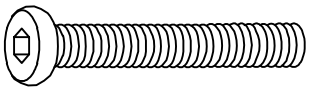	Bolts(5/16"x50mm)	22+1
D		Bolts(1/4"x50mm)	4+1
E		Lock Washer(5/16")	34+1
F	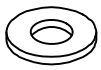	Flat Washer(5/16")	34+1
G		Lock Washer(1/4")	4+1
H		Flat Washer(1/4")	4+1
T		Metal pad(L)	2
K	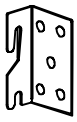	Metal pad(R)	2
M	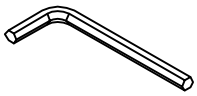	Allen Key(M4)	1+1

Assembly Preparation

Before Beginning assembly:

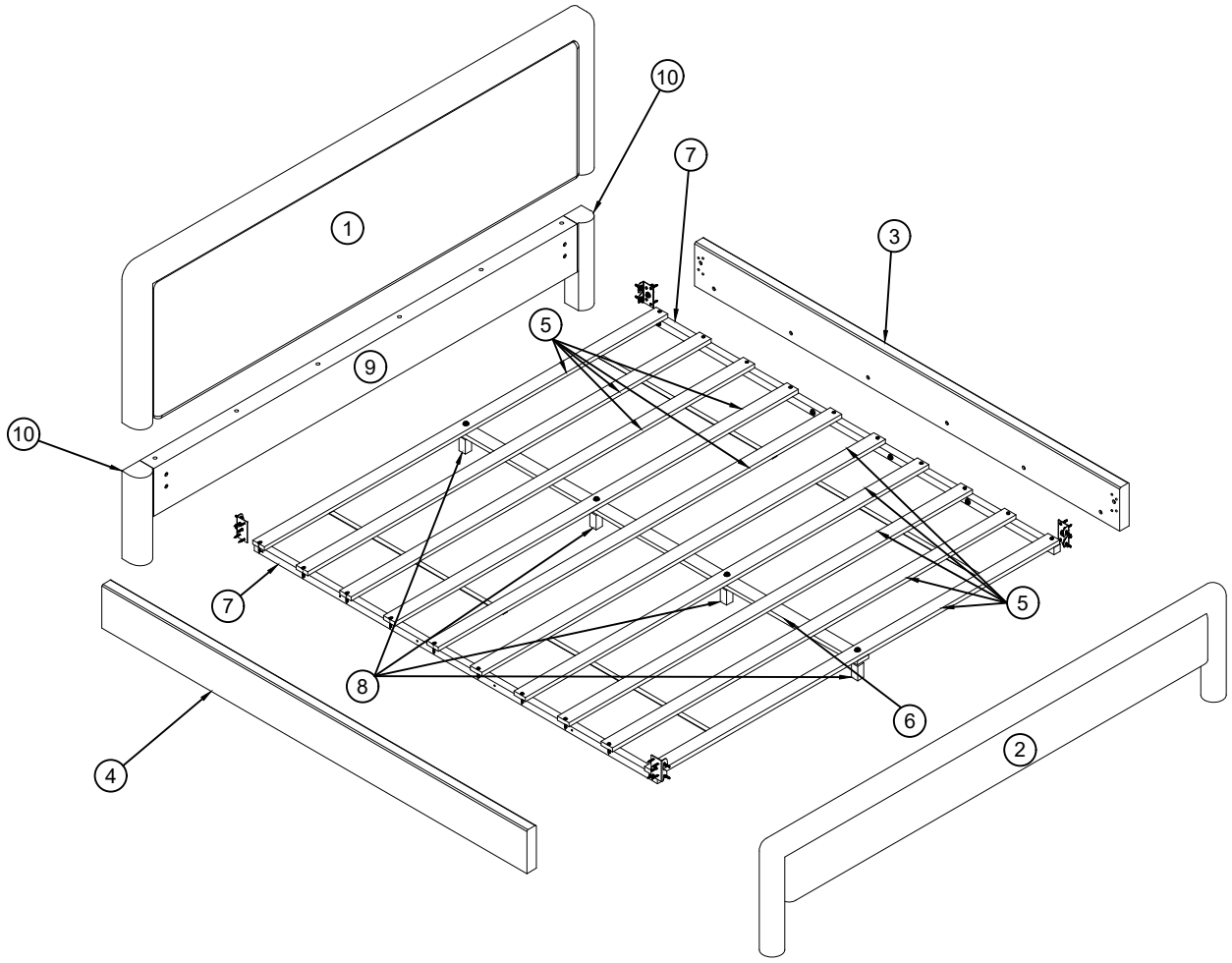

A x 36pcs+1	D x 4pcs+1	G x 4pcs+1	K x 2pcs
B x 12pcs+1	E x 34pcs+1	H x 4pcs+1	M x 1pcs+1
C x 22pcs+1	F x 34pcs+1	T x 2pcs	

- Read the instructions cover to cover
- Have 2 adults on hand for assembly
- Do not assemble on flooring or carpet
- Assemble on a clean, non-marring surface (packing foam)
- Save all packaging until finished

Assembly Steps

OVERVIEW

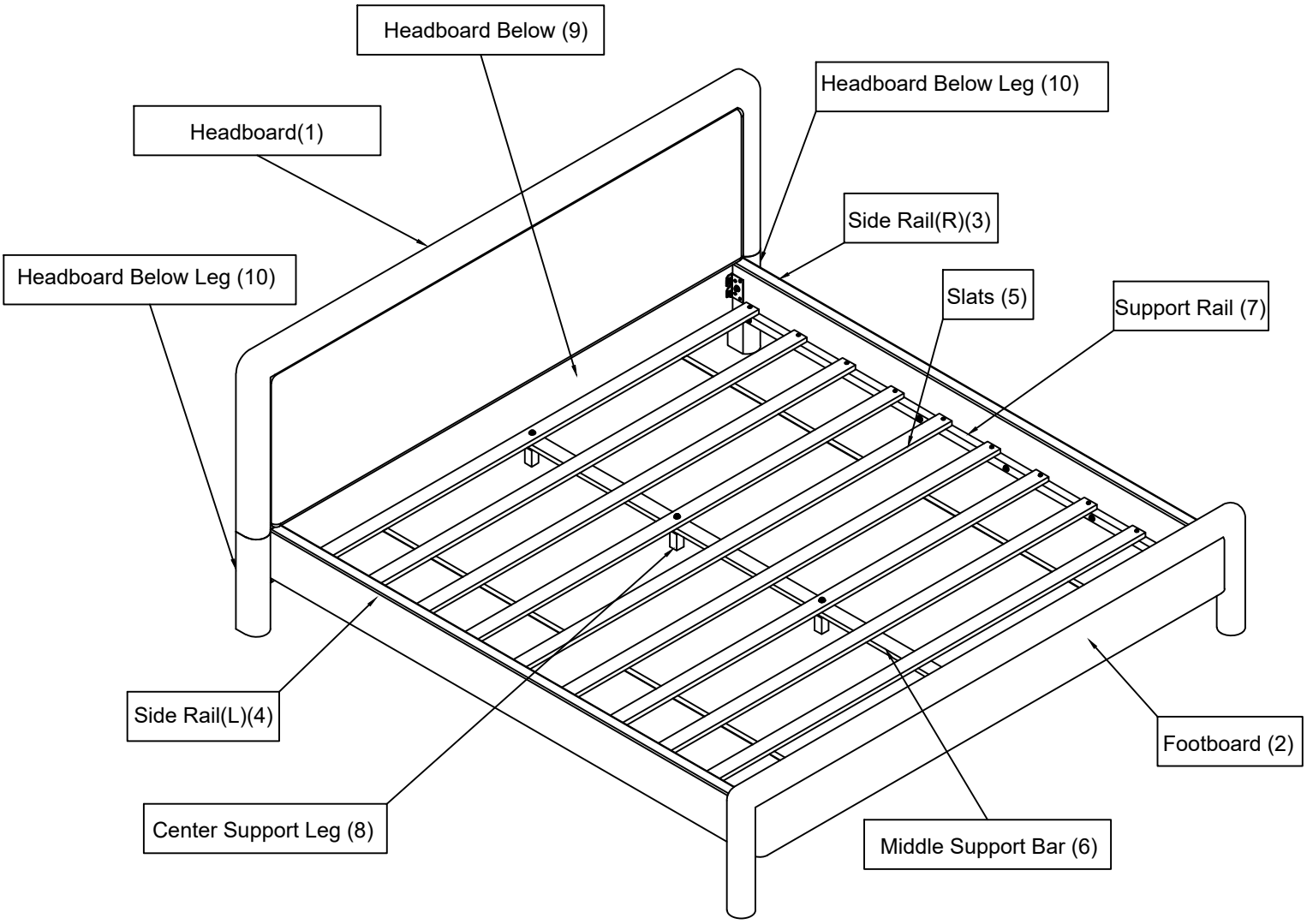

FRONT FACING

This Bed have multiple parts and may require up to 30 minutes to assemble. To give you an overview of the Bed parts, the above picture is to help you put the various parts into perspective. Please read through the instructions below to familiarise yourself with the parts and steps before assembly.

Note: It is recommended that you have an adult partner to assist during the entire assembly process.

Step 1

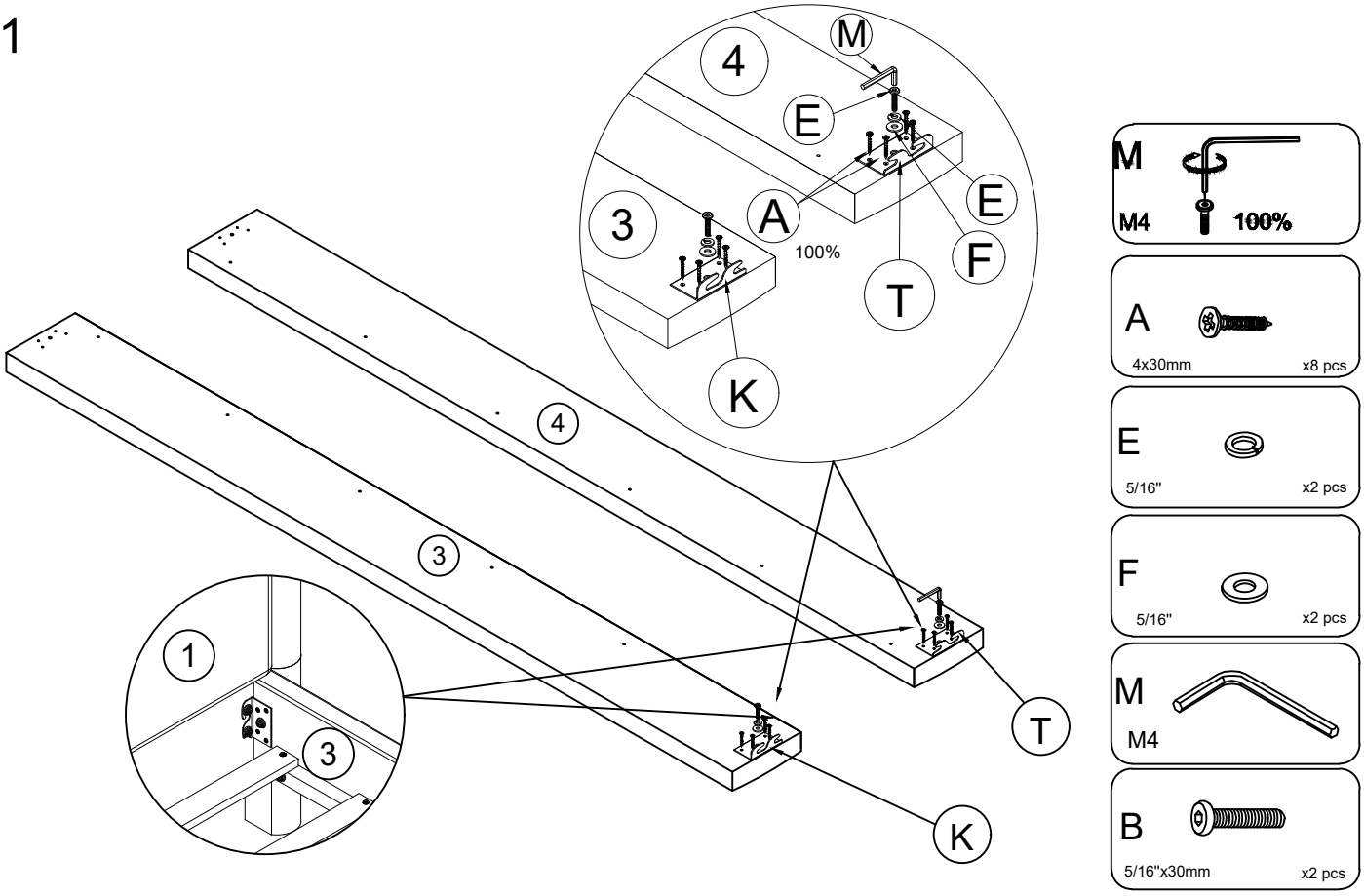

Attach the Metal pad (K) to the Side Rail (R) (3), attach the Metal pad (T) to the Side Rail (L) (4), by using the Bolts (B), Flat Washer (F), Lock Washer (E) and Screw (A) with Allen Key (M).
Note: The Metal pad look is facing down and this place is connected to the Headboard (1).

Step 2

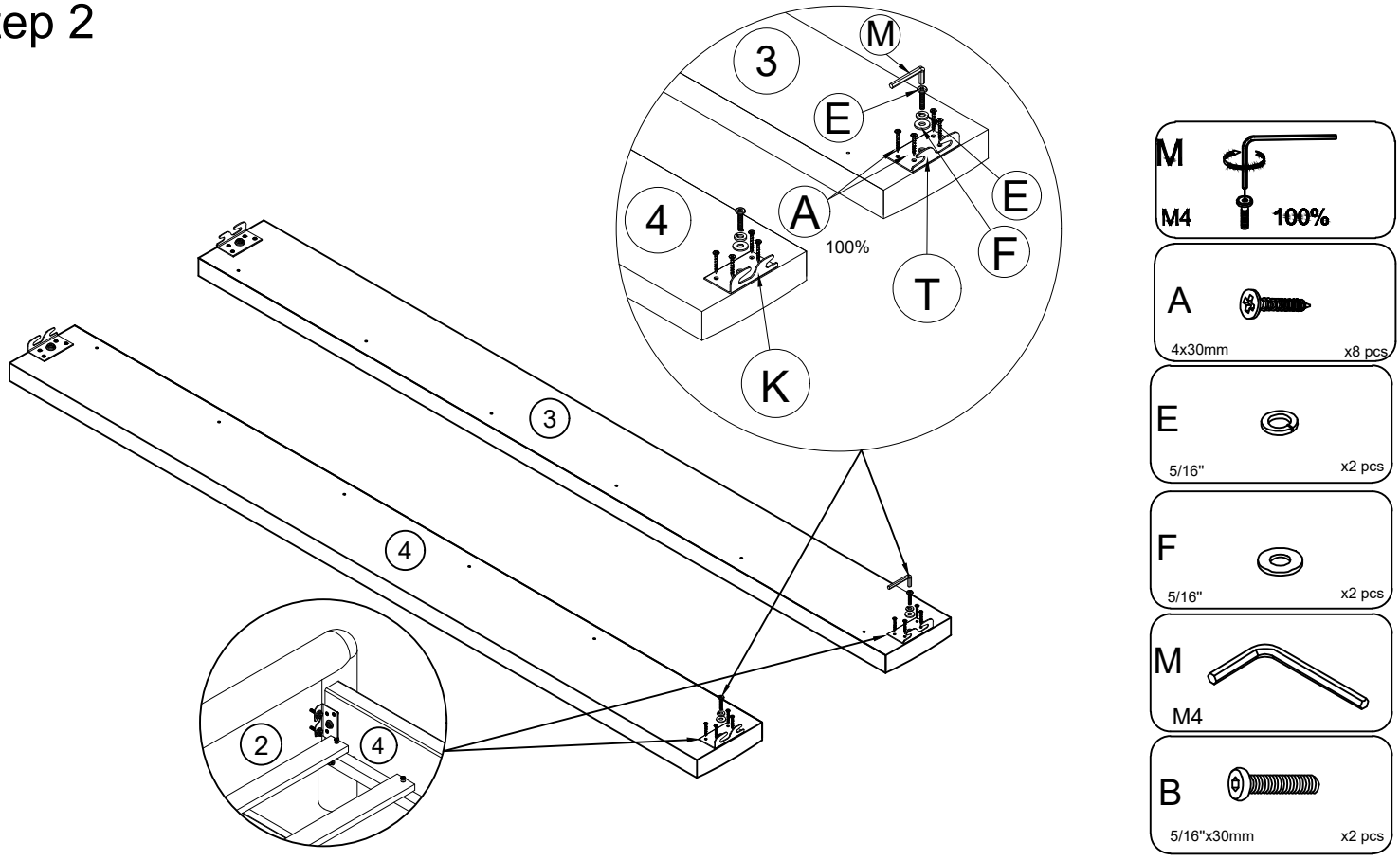

Attach Metal pad (T) to the Side Rail (3), attach Metal pad (K) to the Side Rail (4), by using the Bolts (B), Flat Washer (F), Lock Washer (E) and Screw (A) with Allen Key (M).
Note : The direction of the Metal Pad and this place is connected to the Footfoard (2).

Step 3

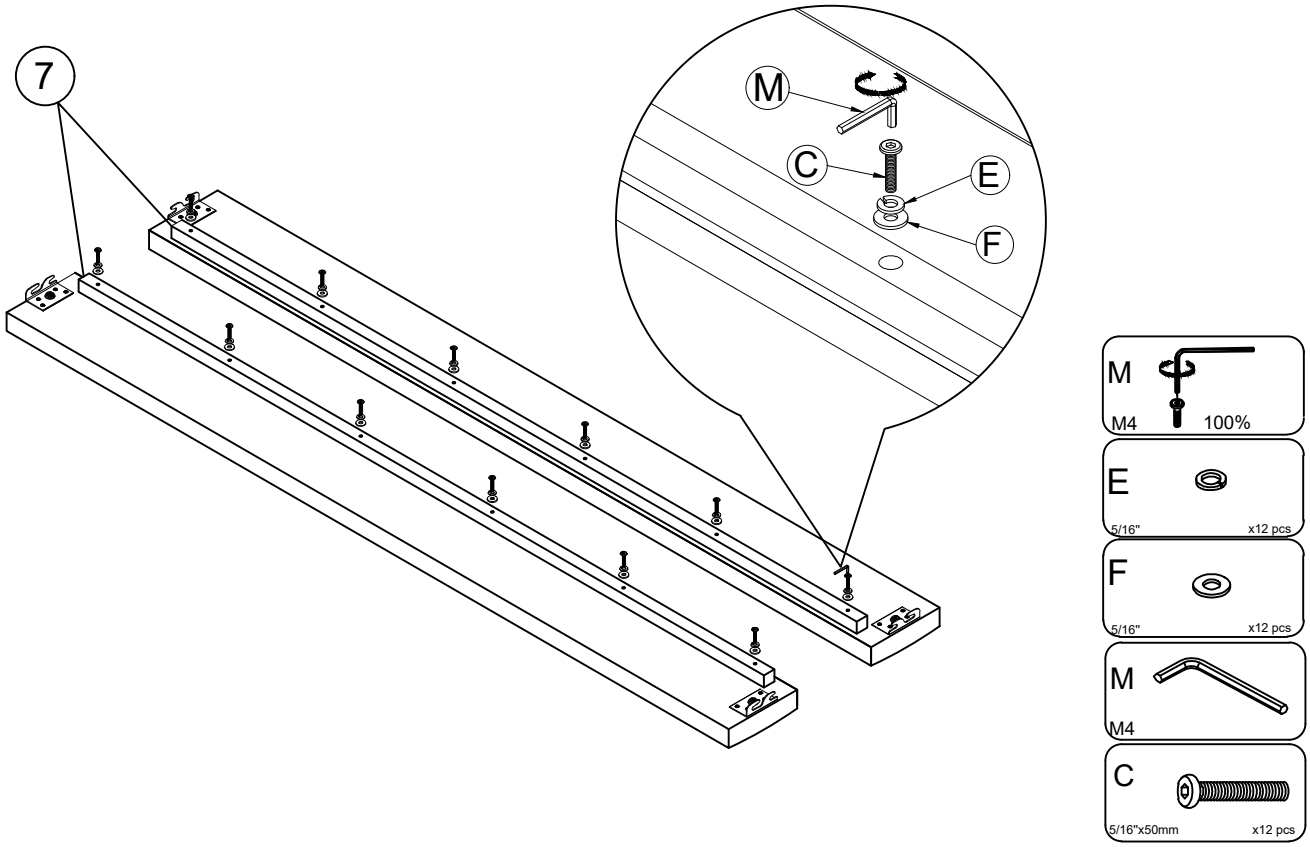

Attach the Support Rail (7) to the Side Rail (3) and the Side Rail (4). By using the Bolts (C), the Flat Washer (F) and the Lock Washer(E) with M4 Allen Key(M).

Step 4

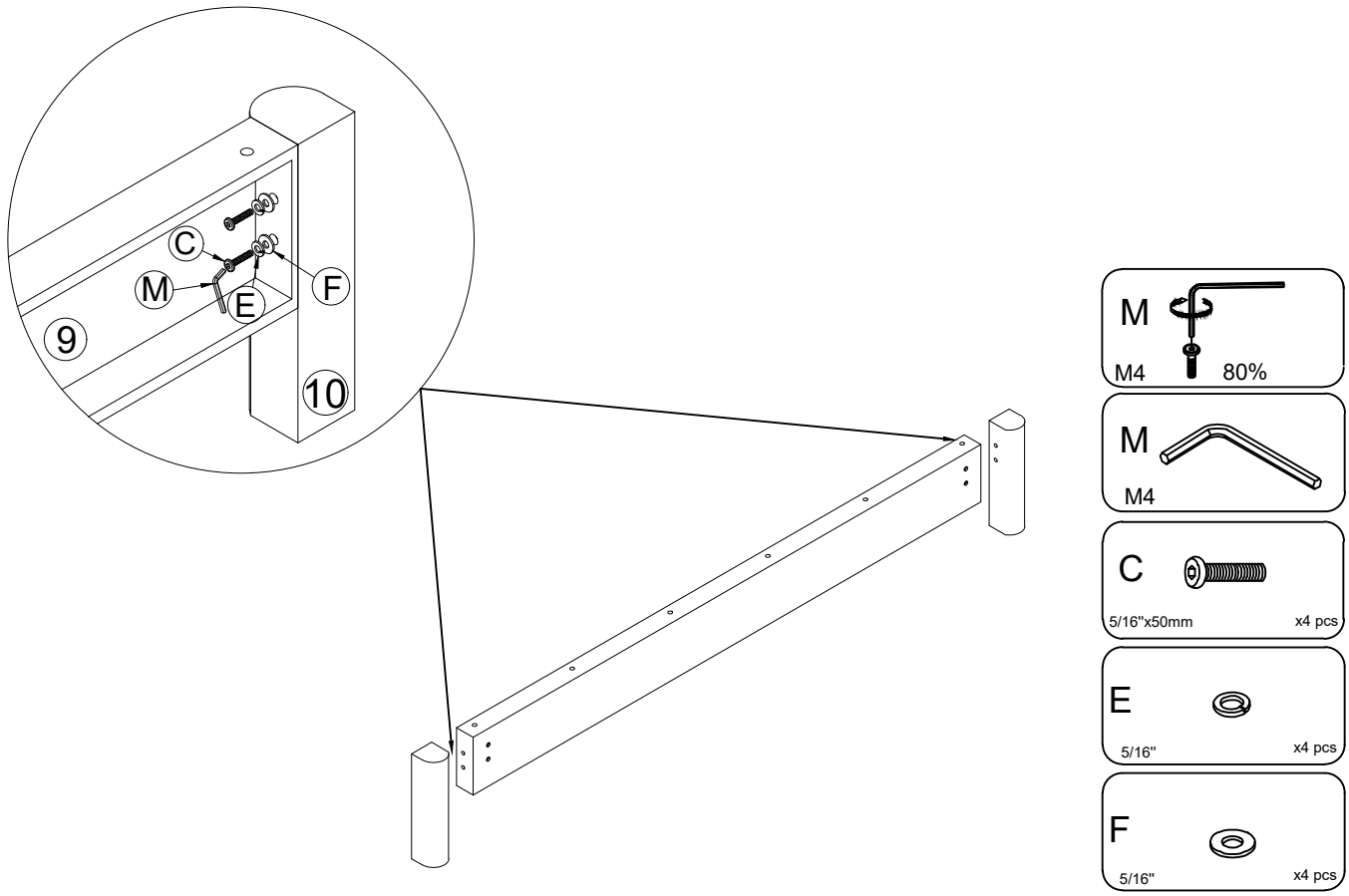

Use Bolts (C), Lock Washers (E), and Flat Washers (F) with the Allen Key (M) to attach the Headboard Below (9) to the Headboard Below Legs (10).

Step 5

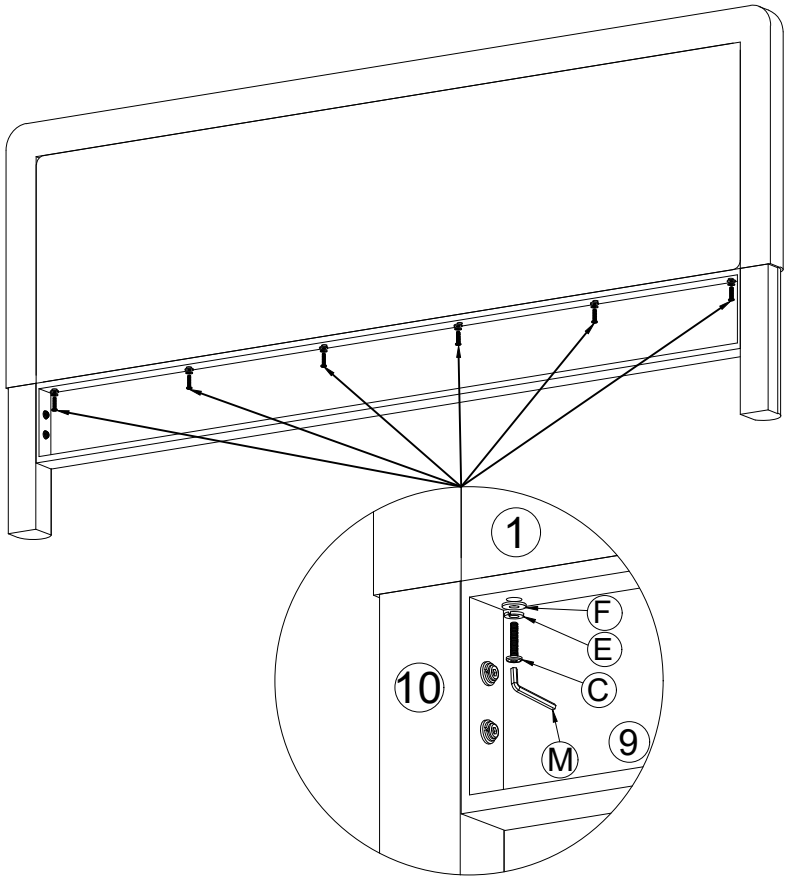

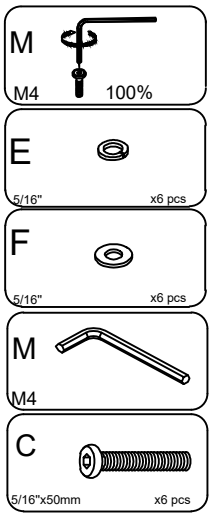

Attach the Headboard Below (9) to the Headboard (1) using Bolts (C), Lock Washers (E), and Flat Washers (F). Tighten with the Allen Key (M).

Step 6

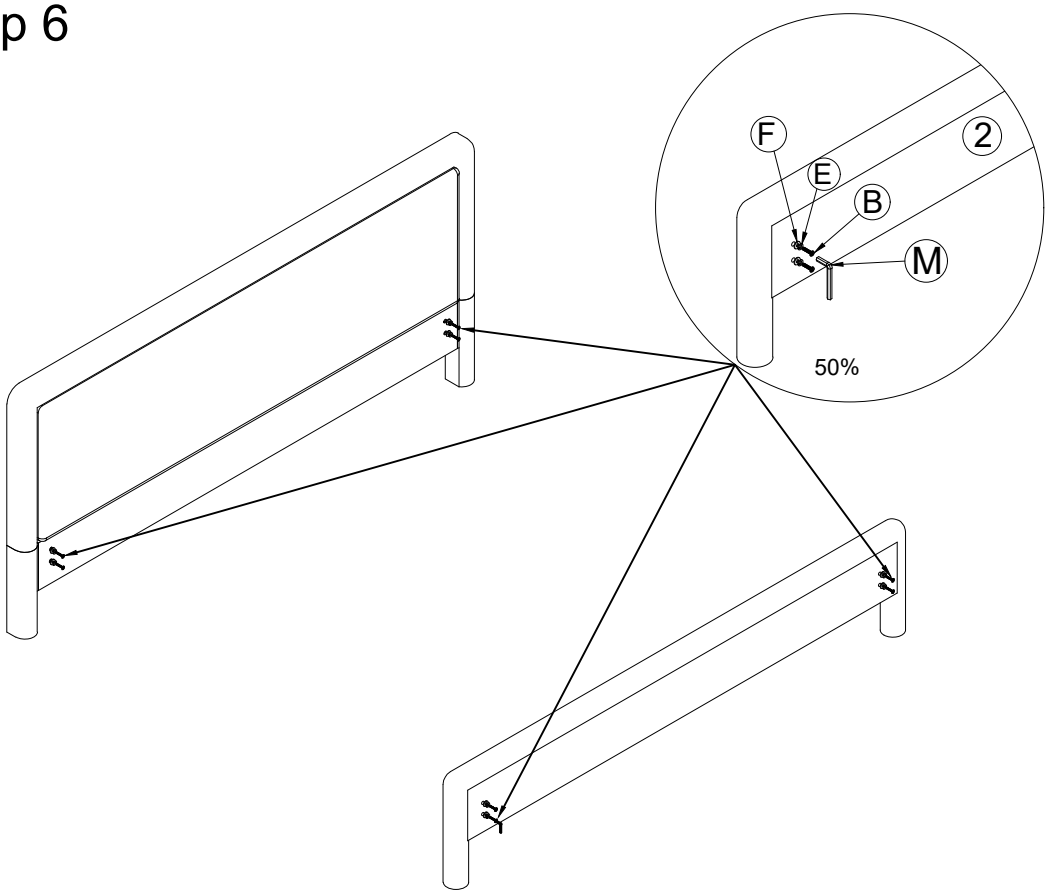

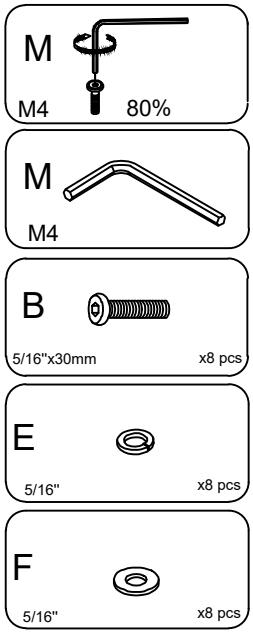

Use Bolts (B), Lock Washer (E) and Flat Washer (F) with Allen Key (M) to screw into the Headboard Below (9) and Footboard (2) to connect Side Rails.
Note: The Bolts (B) is only half assembled.

Step 7

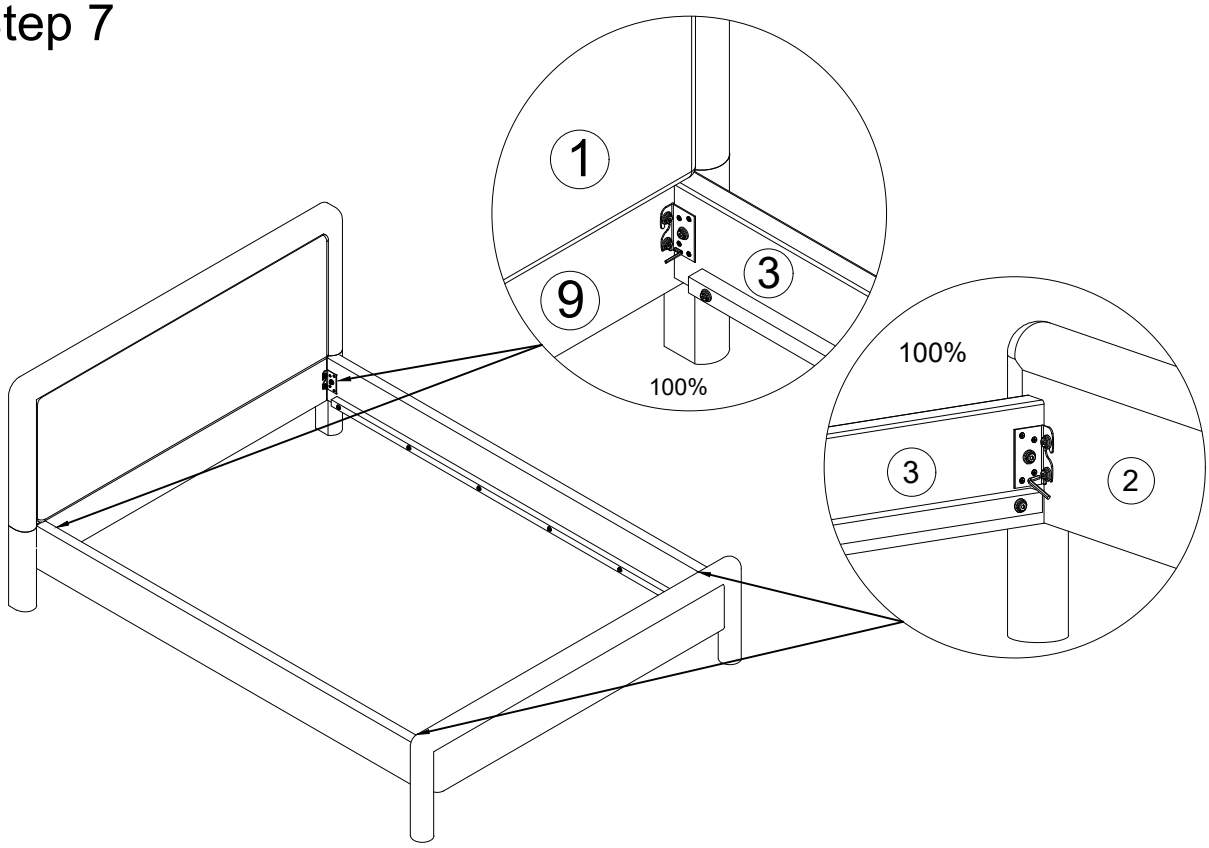

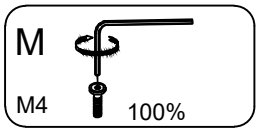

Attach the Side Rail (3) and the Side Rail (4) to the Headboard Below (9) and Footboard (2), by using M4 Allen Key (M) to tighten the Bolts (B).
(Note: the direction of the Metal pad is down)

Step 8

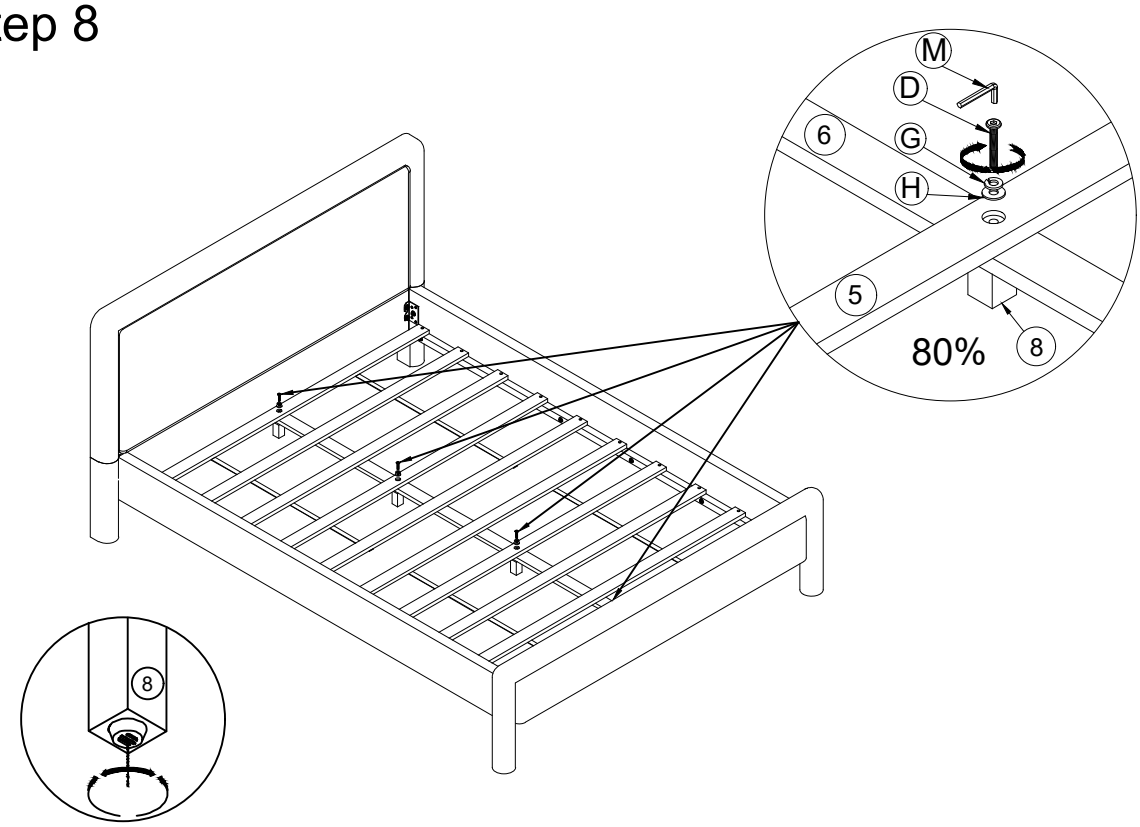

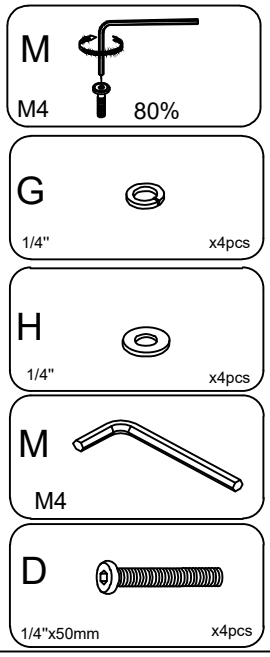

Align the assembly position on the Middle Support Bar (6) with the Slats (5) and the Center Support Leg (8). Then attach the Slats (5) and the Middle Support Bar (6) to the Center Support Leg (10) by using the Bolts (D), the Lock Washer (G) and the Flat Washer (H) with M4 Allen Key (M).

Step 9

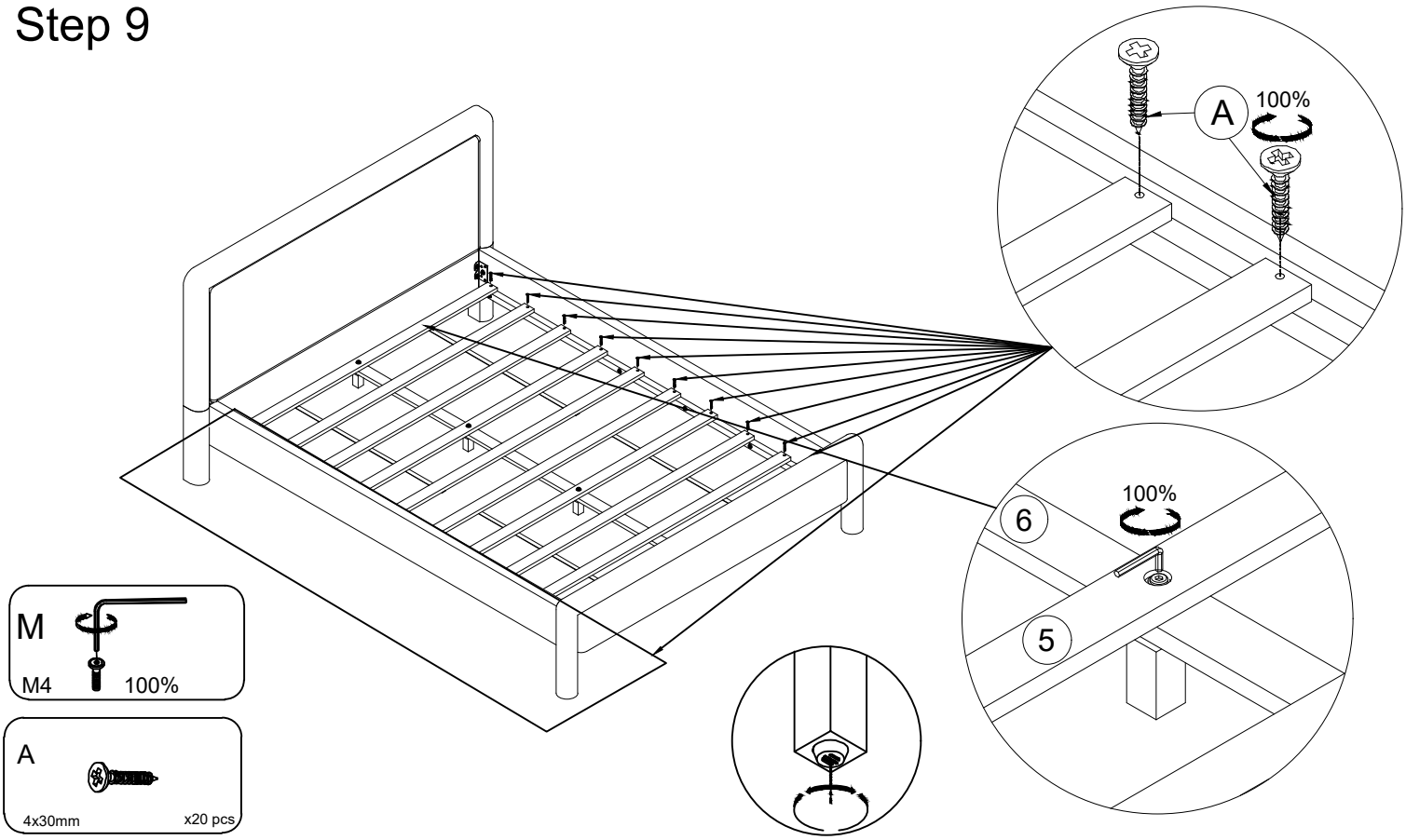

Attach the Slats (5) to the bed Sides Rail (3) and (4). Use Screw (A).
Finally, use the M4 Allen Key (M) to tighten the Bolts (D) 100%. Adjustable leveling foot of Center Support Legs.

Step 10

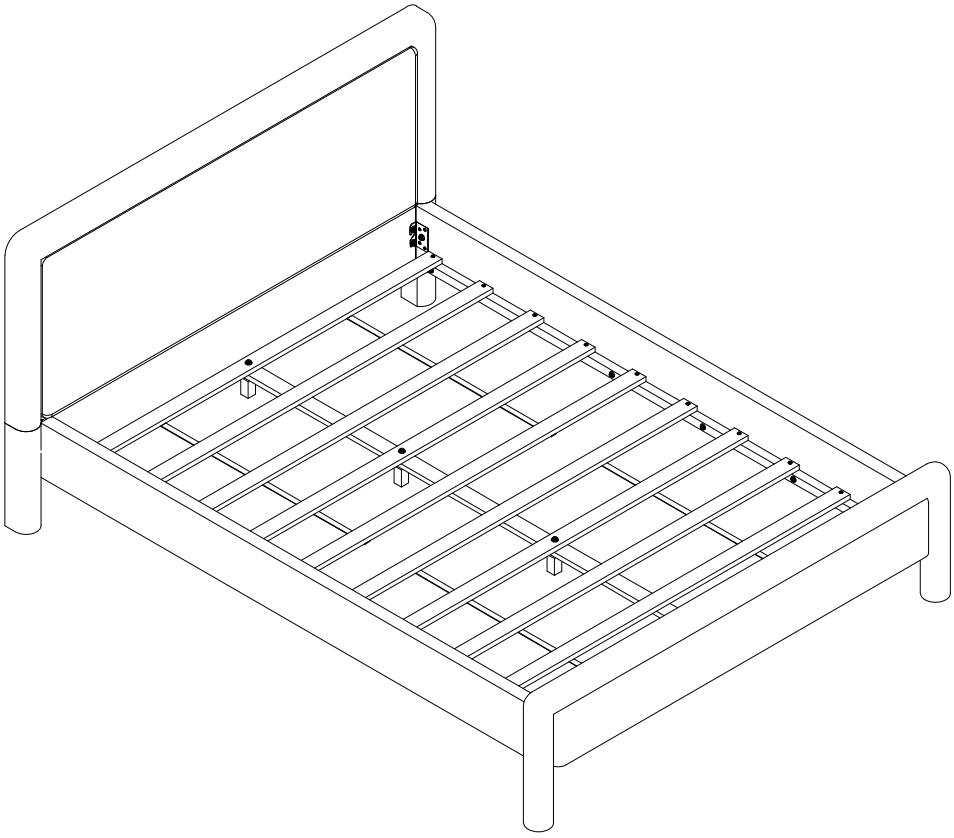

Thank you for your trust and preference in using our products.
The product will bring you a peaceful sleep forever.

Finish

Place the Bed on a LEVEL SURFACE.
Inspect it and make sure all parts are adequately connected.
Don't push too hard,shake on the bed.
This would help to align all the parts at the joint areas.

CAUTION 1: When tightening these screws, tighten sequentially.
DO NOT tighten any screws fullly and the towards the next one.
This would cause the frame to warp.
If there is still wobbles, loosen the screws and execute this same process.DO NOT tighten any screws fully and then towards the next one.
WARNING!! IF BED IS NOT STABLE, IT COULD LEAD TO DAMAGING THE PRODUCT.
Ensure all screws are fully locked into position.
After removing the pillow from the vacuum-sealed bag, it will take about 10 minutes to return to its normal shape.
The bed is ready to be used.
Caution 2: This bed can only be used on a flat,level surface.