# *ASSEMBLY INSTRUCTION*
# *47D*

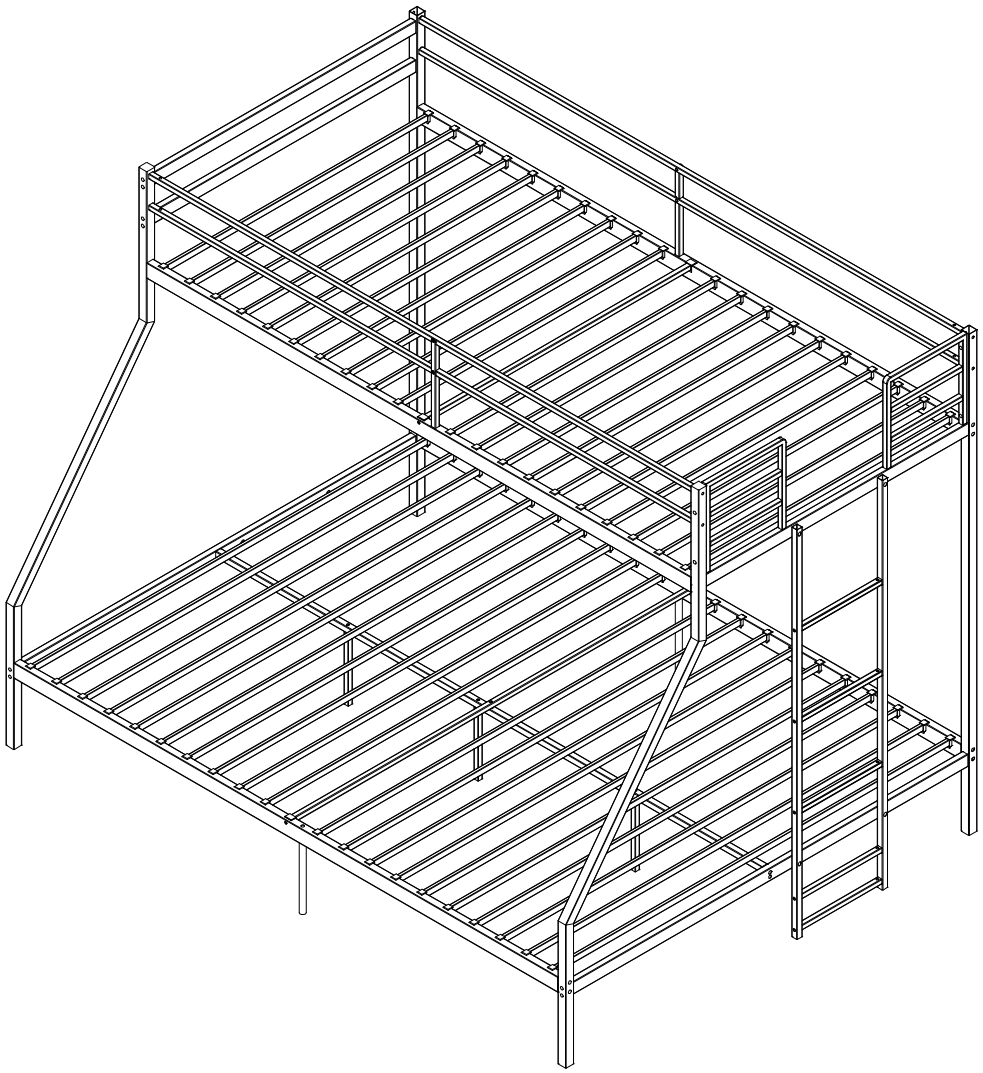

## IMPORTANT NOTE

1.Please check that all parts are complete before installation.
2.Please strictly follow the installation steps to install.
3.Please install the bed on a clean and smooth surface to prevent any damage
4.Please do not use the power tools to assemble the bed.
5.Please periodically check all the fittings and re-tighten as necessary.
6. Please do not use the bed unless all bolts and screw are firmly secured
7.Note: Distinguishing between the numbers 6 and 9 is different,
with the number 9 underlined; Please tighten all screws by 60% first,
and then tighten them by 100% after installation is complete.

BUNK-BED ASSEMBLY INSTRUCTIONS

SAFETY WARNINGS AND GENERAL NOTES:

1. Follow the information on the warnings on the bunk bed end structure and on the carton. Do not remove the warning label from the bed.
2. Always use the recommended size mattress support, or both, to help prevent the likelihood of entrapment or falls.
3. Do not allow children under 6 years of age to use the upper bunk.
4. Periodically check and ensure the guardrail, ladder and other components are in their proper position, free from damage, and all connectors are tight.
5. Do not allow horseplay on or under beds.
6. Always prohibit jumping on the upper bunk.
7. Prohibit more than one person on the upper bunk.
8. Always use the ladder for entering and leaving the upper bunk.
9. Do not use substitute parts. Contact the manufacturer or dealer for replacement parts.
10. Use of a night-tight may provide added safely precaution for a child using the upper bunk.
11. Always use guardrails on both long sides of the upper bunk.
12. If the bunk bed will be placed next to a wall, the guardrail that runs the full length of the bed should be placed against the wall to prevent entrapment between the bed and the wall.
13. The use of water or flotation mattresses is prohibited.

STRANGULATION HAZARD–Never attach or hang items to any part of the bunk bed that are not designed for use with the bed.

14. Keep these instructions for future reference.
15. We recommend assembling your bunk bed on the shipping carton to protect your floor or carpet.
16. Be certain all staples are out of the box before beginning assembly on the shipping carton.
17. USE ONLY MATTRESSES WHICH ARE AS THE TABLE BELOW ON UPPER AND ON LOWER BUNKS.

| **Bed type** | **Length** | **Width** | **Thickness** |
|---|---|---|---|
| Twin Standard | 74" - 75" | 38 ½" | 6" |

18. SURFACE OF MATTRESS MUST BE AT LEAST 5" (127MM) BELOW THE UPPER EDGE OF GUARDRAIL

The stairs are installed
in the left direction.

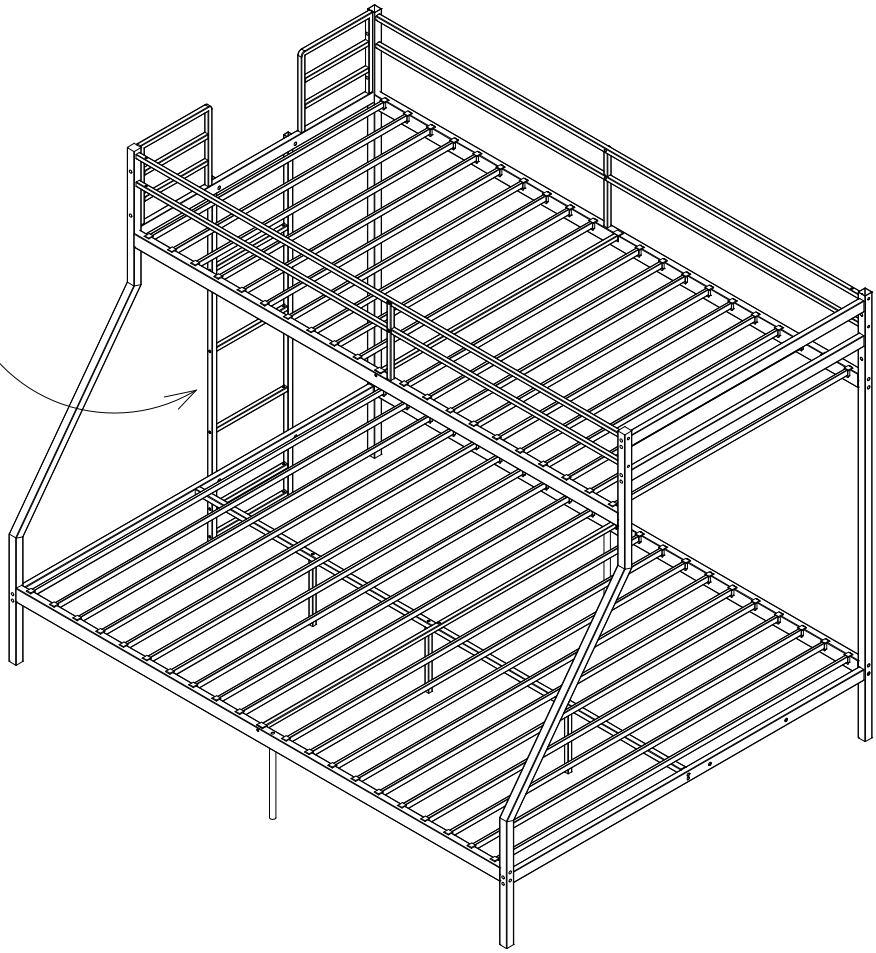

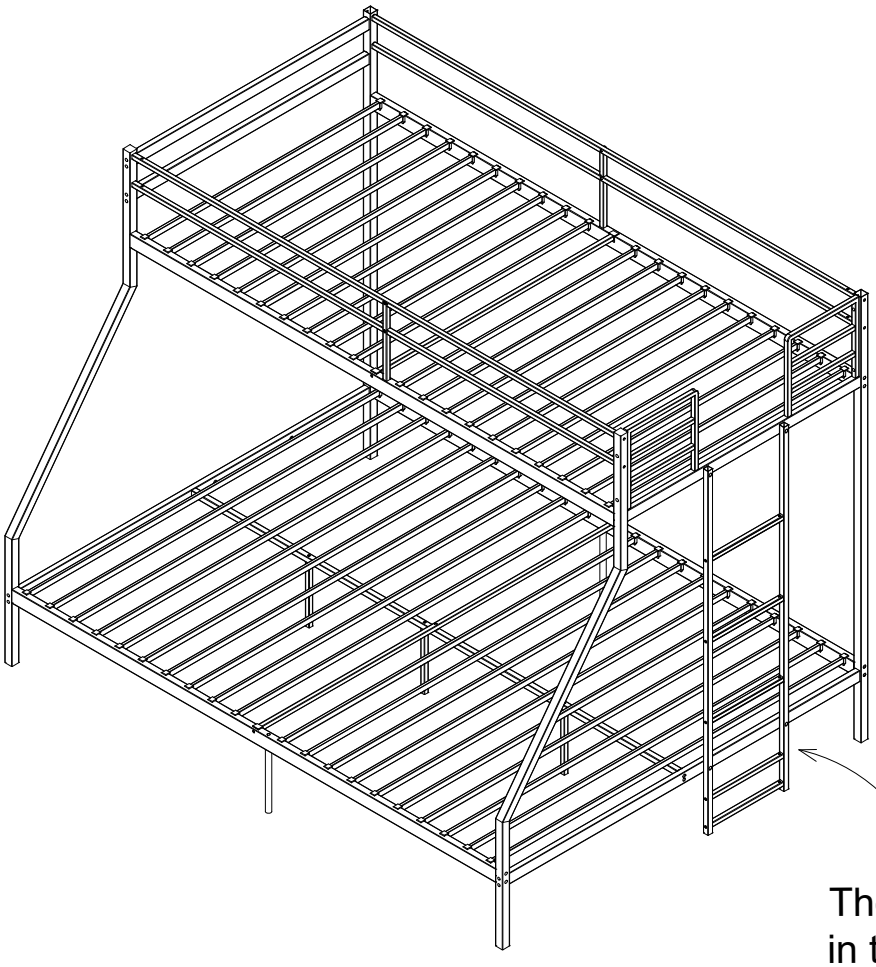

The stairs are installed
in the right direction.

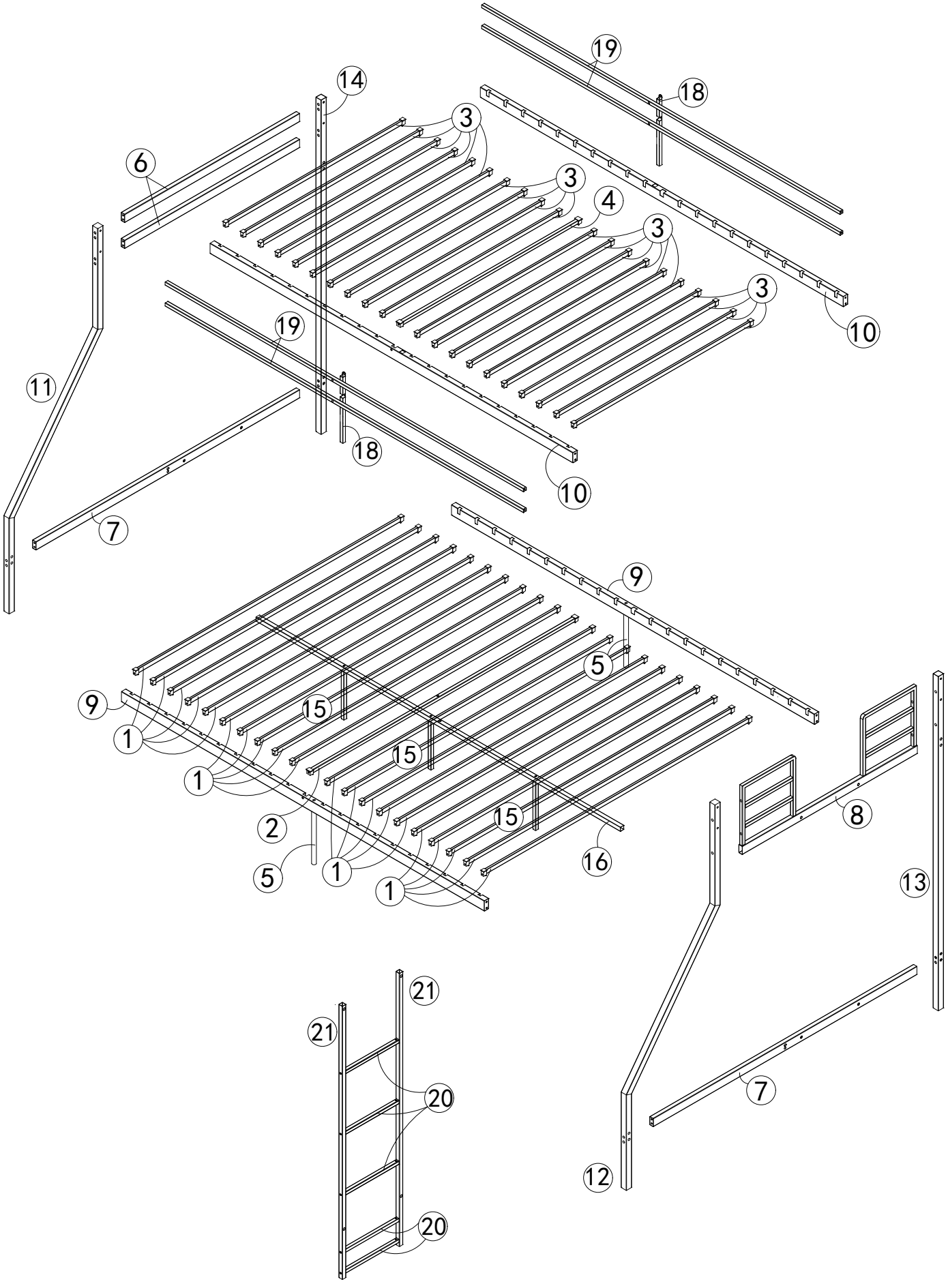
19
18
14
3
6
3
4
3
3
19
10
11
18
10
7
9
5
9
15
1
15
1
2
15
5
1
16
1
8
13
21
21
20
20
12
7

# Components List

① x20

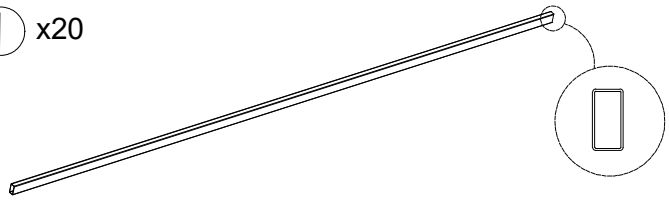

② x1

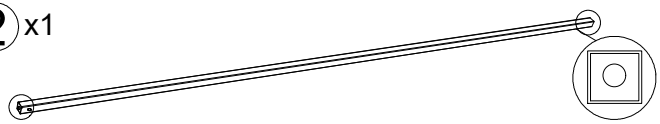

③ x20

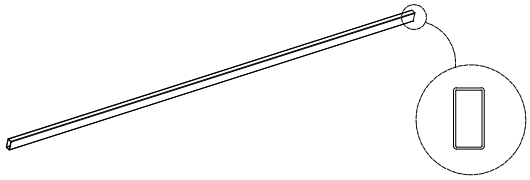

④ x1

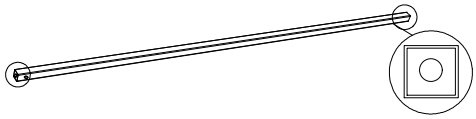

⑤ x2



⑥ x2

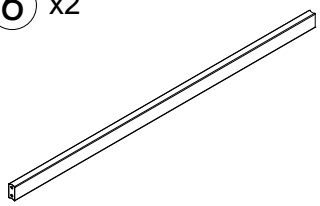

⑦ x2

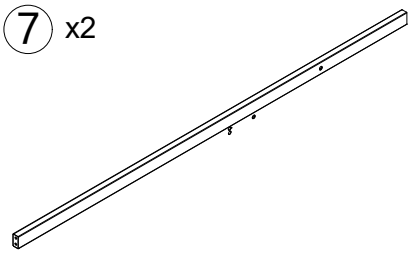

⑧ x1

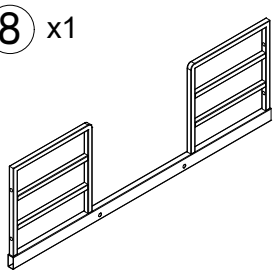

⑨ x2

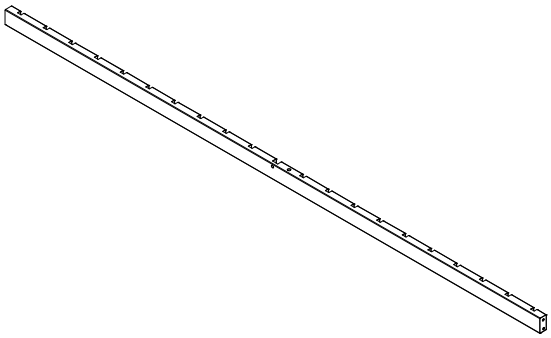

⑩ x2

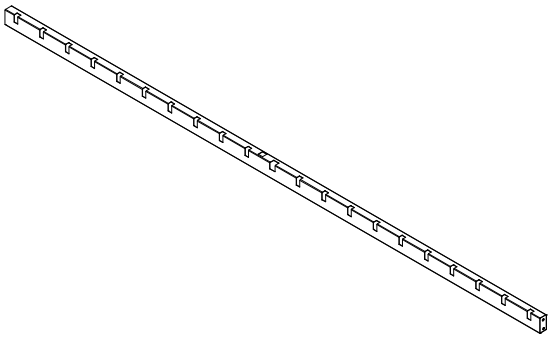

⑪ x1

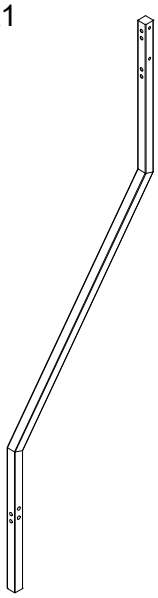

⑫ x1

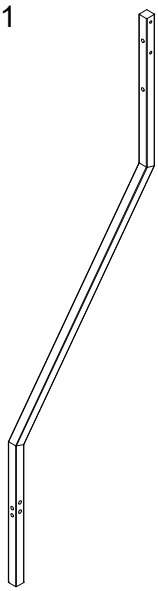

⑬ x1



⑭ x1



⑮ x3

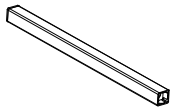

# Components List

16 x1

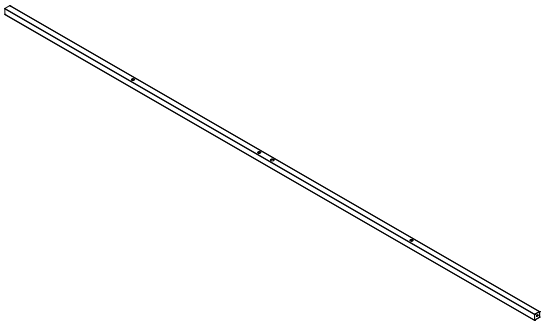

17

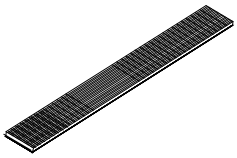

Bubble Pads

18 x2

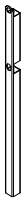

22

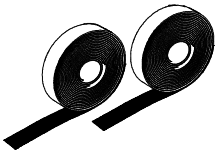

Sound Insulation Cotton

19 x4

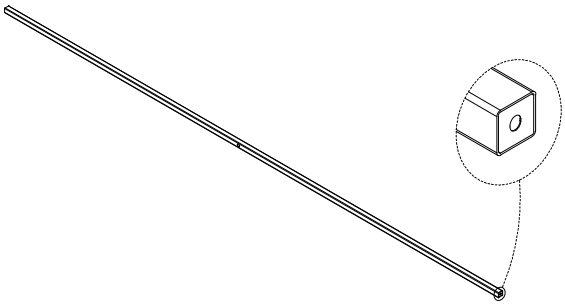

20 x5

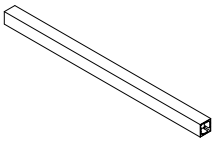

21 x2

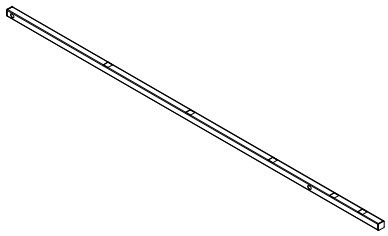

# Hardwares List

| Item | Description | Qty |
|---|---|---|
| A |  M8x50 | 32 |
| B |  M8x40 | 6 |
| C |  M8x20 | 2 |
| D |  M8x25 | 8 |
| E |  M6x40 | 4 |
| F |  M8x30 | 4 |
| G |  M6x12 | 5 |
| H |  16x16 | 4 |
| J |  M6 Allen key | 2 |
| K |  M8 Allen key | 2 |
| M |  M6x50 | 8 |

| Item | Description | Qty |
|---|---|---|
| N |  M6 M8 | 46 |
| R |  M6x30 | 1 |
| S |  M6x20 | 15 |
| U |  M6x12 | 4 |
| Y |  10x20 | 80 |
| | | |
| | | |
| | | |

## Step 1

| | | | |
|---|---|---|---|
| A | M8x50 | 16 | |
| N | M8 | 20 | |
| K | M8 Allen key | 1 | |
| D | M8x25 | 4 | |
| B | M8x40 | 4 | |

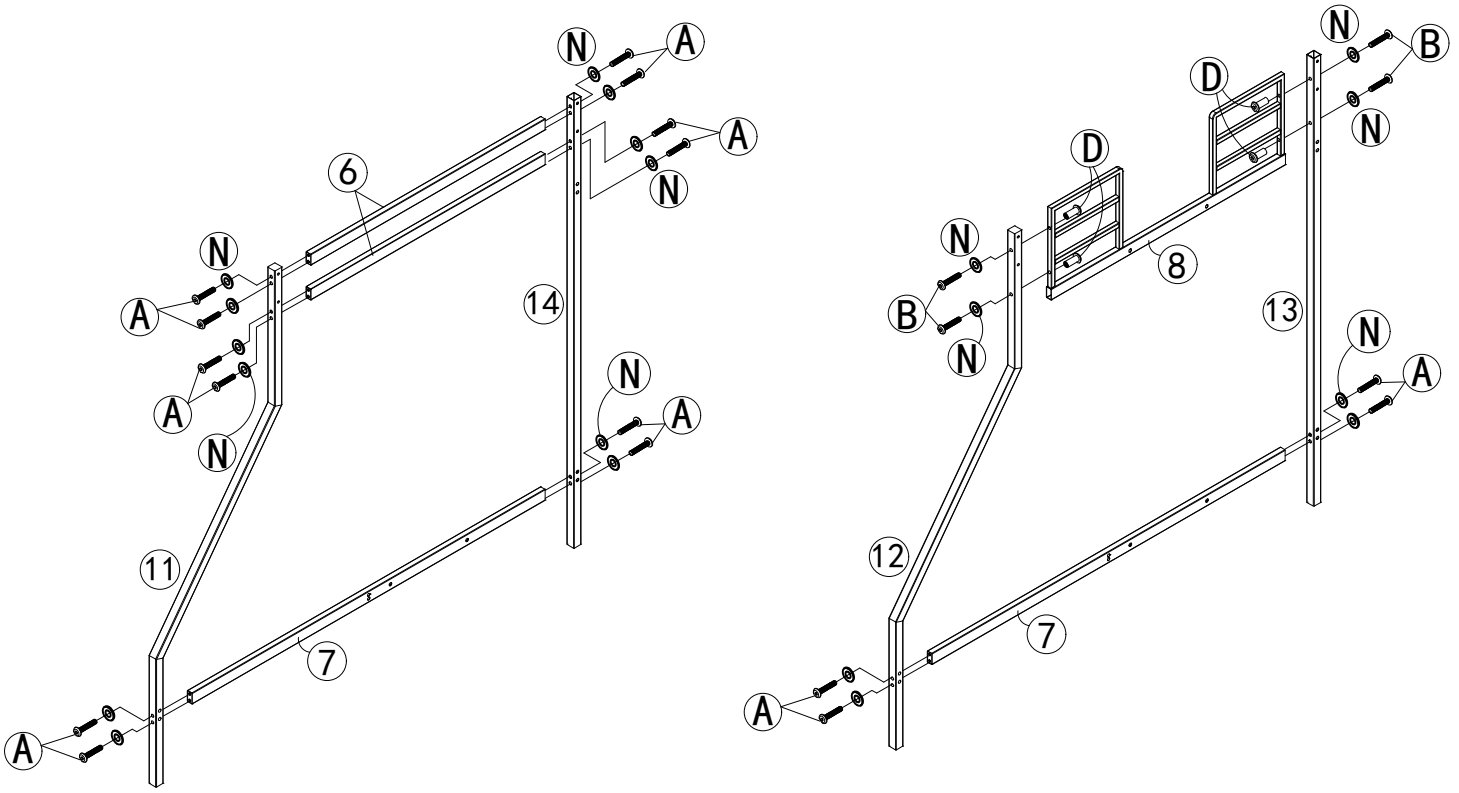


## Step 2

| | | | |
|---|---|---|---|
| A | M8x50 | 16 | |
| K | M8 Allen key | 1 | |
| N | M8 | 18 | |
| B | M8x40 | 2 | |
| C | M8x20 | 2 | |
| S | M6x20 | 3 | |

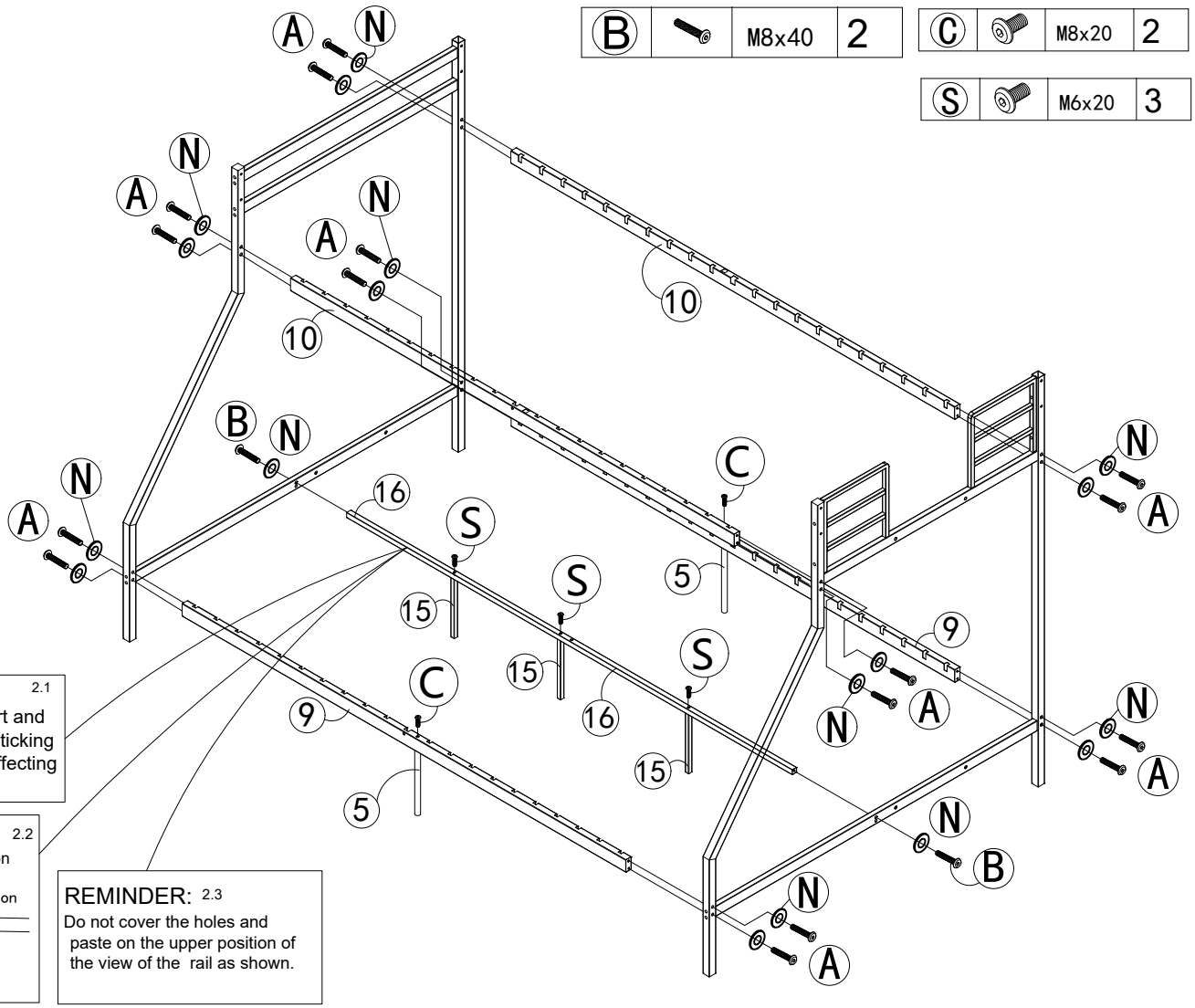


REMARK: 2.1
Clean the sticking part and keep it clean before sticking the velcro, to avoid affecting the stickiness.

REMARK: 2.2
Tear off the white isolation paper on the back of Sound Insulation Cotton

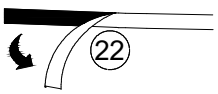


REMINDER: 2.3
Do not cover the holes and paste on the upper position of the view of the rail as shown.

Step 3

| | | |
|---|---|---|
| H | | 4 |
| Y | | 80 |

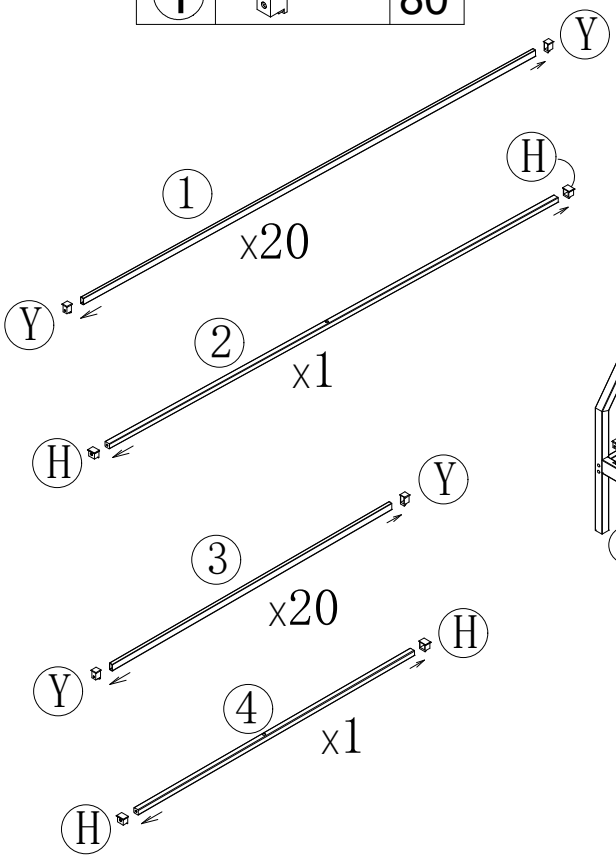


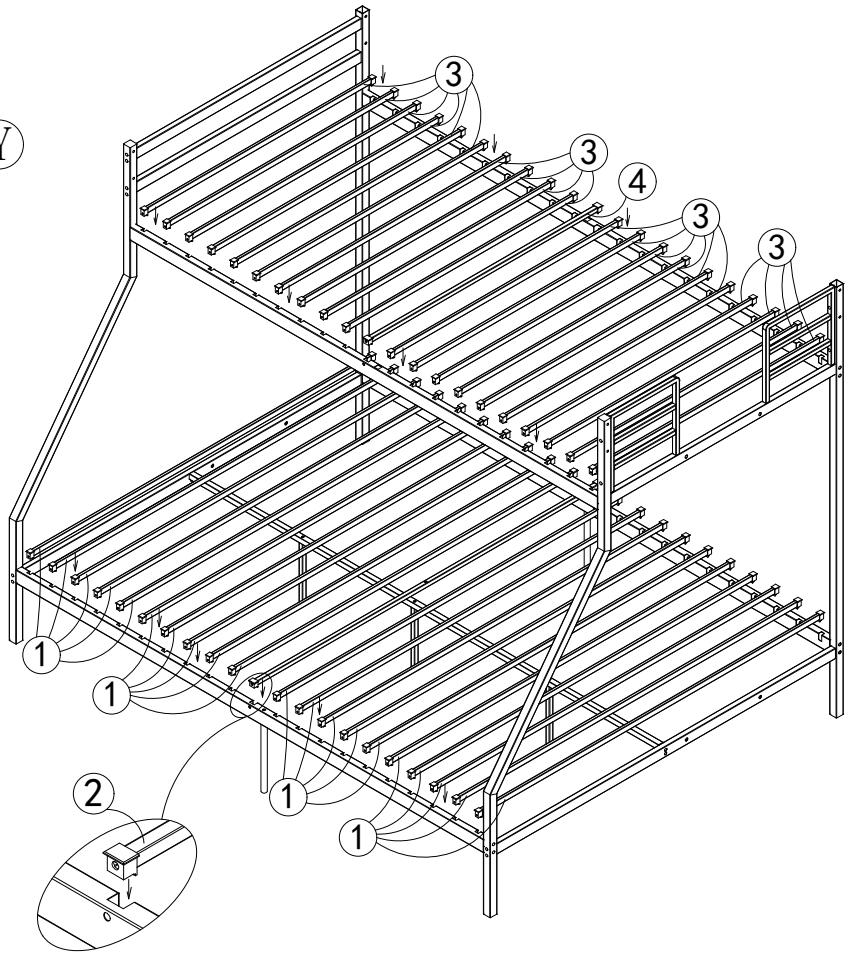


Step 4

| | | |
|---|---|---|
| G | M6x12 | 5 |
| U | M6x12 | 4 |
| N | M6 | 8 |
| R | M6x30 | 1 |

| | | |
|---|---|---|
| M | M6x50 | 8 |

| | | |
|---|---|---|
| J | M6 Allen key | 2 |
| E | M6x40 | 4 |
| S | M6x20 | 2 |

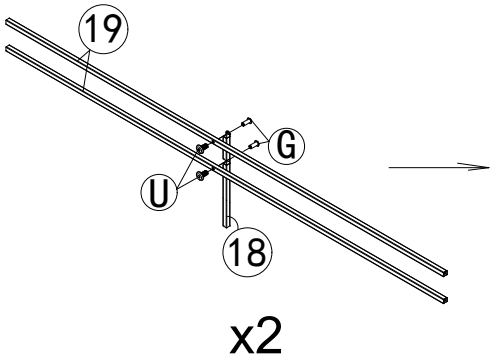


x2

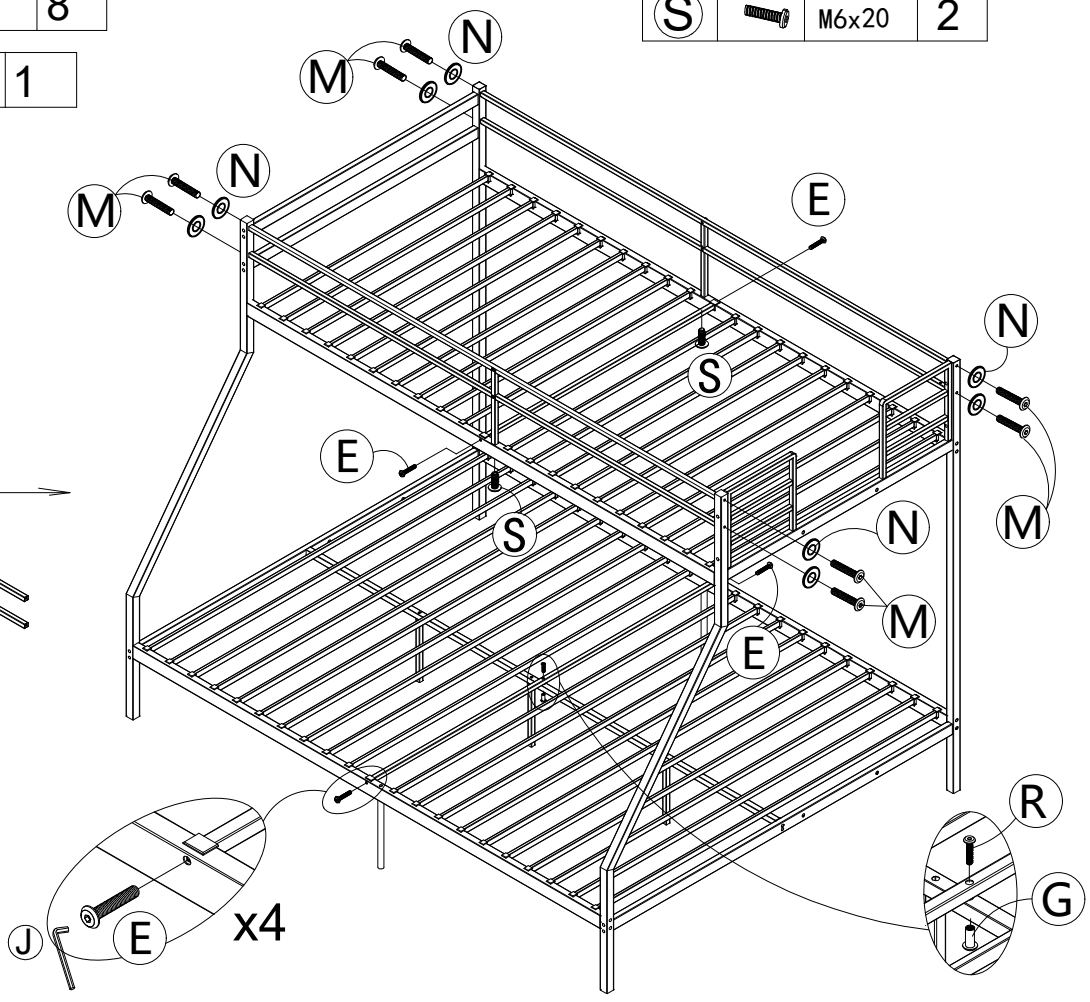


x4

## Step 5

| | | | |
|---|---|---|---|
| F | M8x30 | 4 | |
| S | M6x20 | 10 | |
| D | M8x25 | 4 | |
| K | M8 Allen key | 2 | |
| J | M6 Allen key | 1 | |

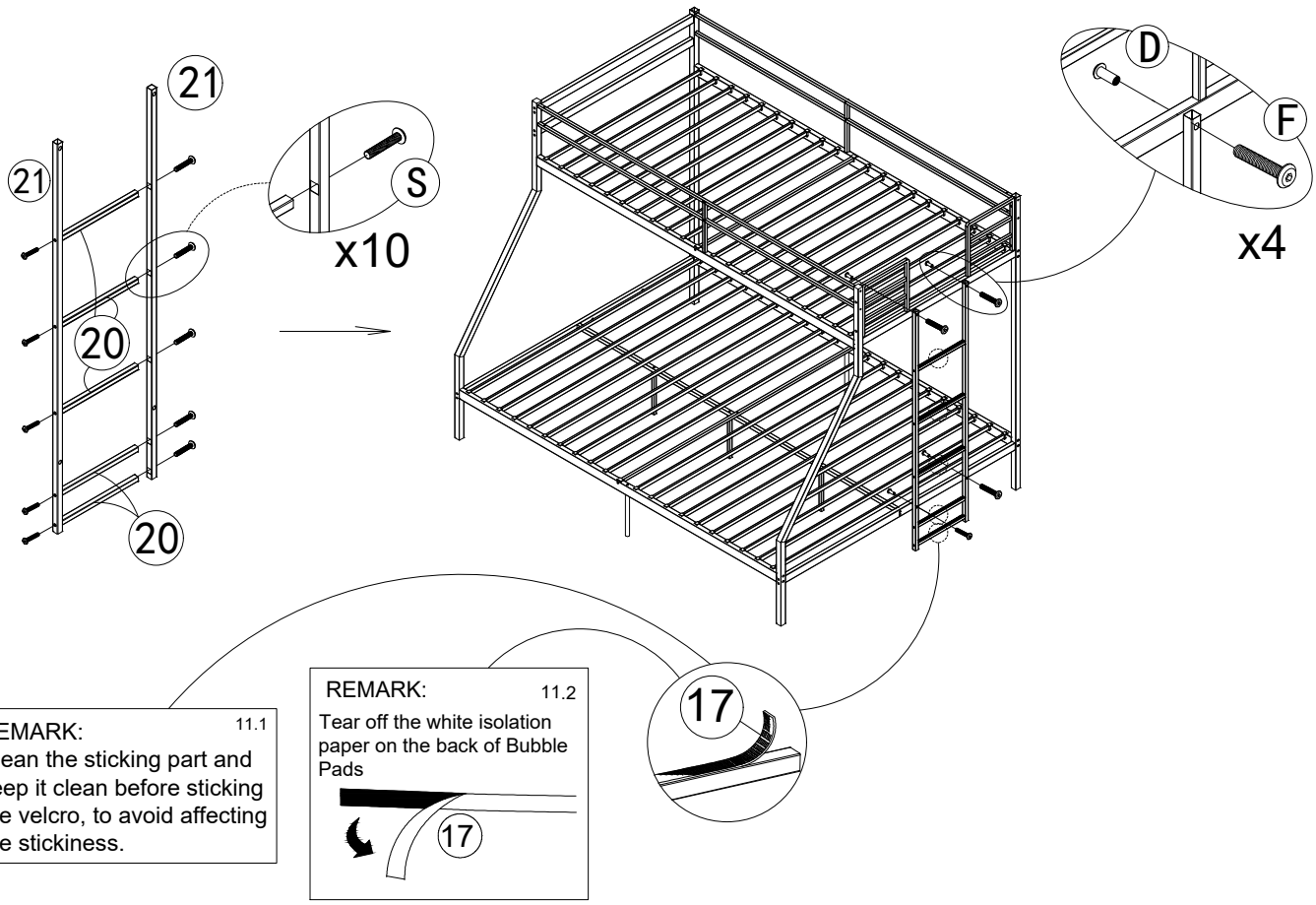


REMARK: 11.1
Clean the sticking part and keep it clean before sticking the velcro, to avoid affecting the stickiness.

REMARK: 11.2
Tear off the white isolation paper on the back of Bubble Pads




## Step 6

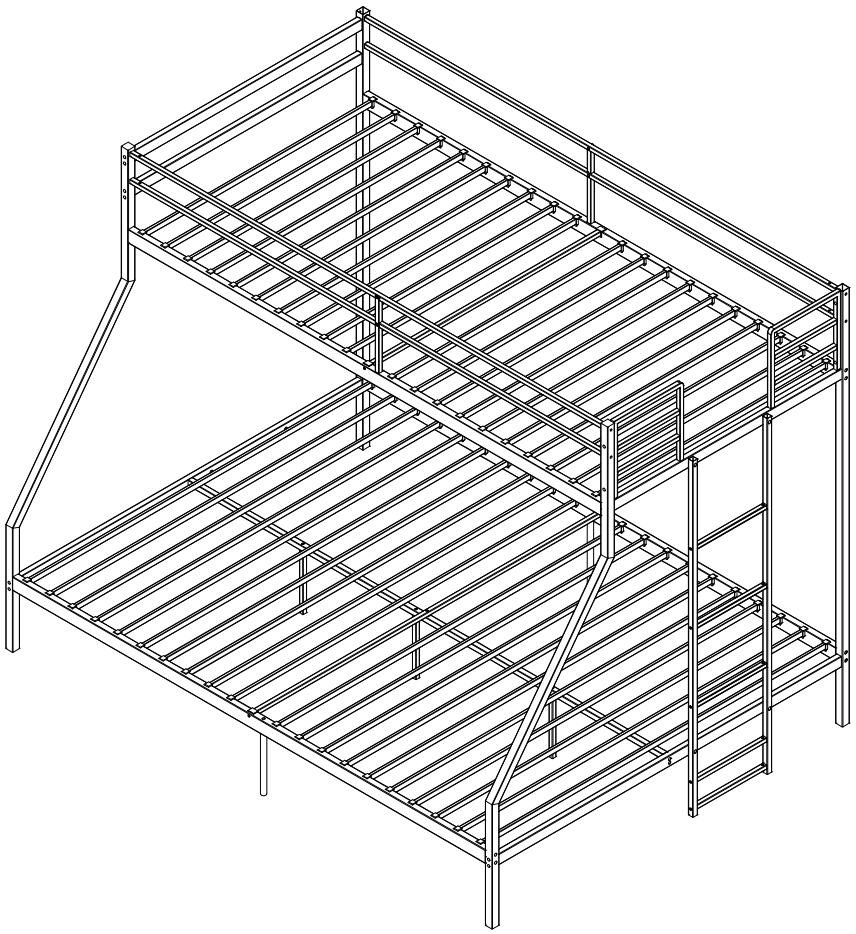

Please check if the screws are tightened at each step.