ASSEMBLY INSTRUCTIONS

			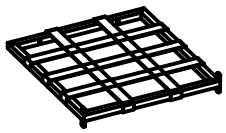
A 1pc	B 1pc	C 1pc	D 1pc
M6*15	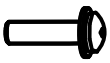 M6*40		
E 4pcs	F 4pcs	G 1pc	

1

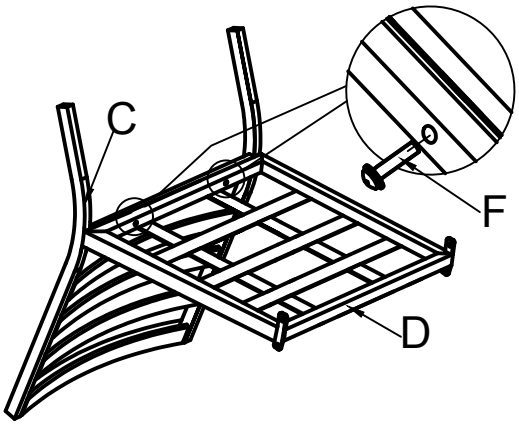

2

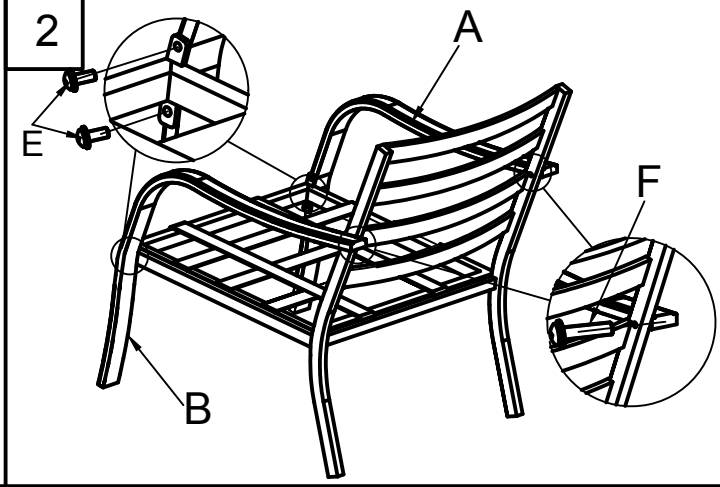

3

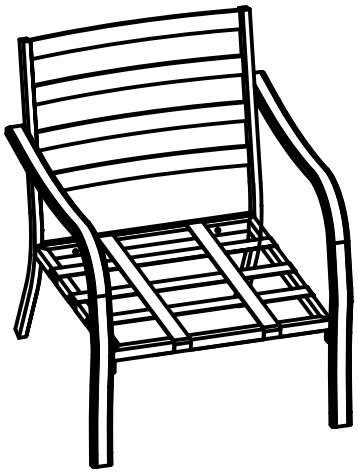

ASSEMBLY TIPS:

Please use the hardware and accessories included in the set. DO NOT use other electrical or manual tools.In order to facilitate the assembly and make your final product firm and stable, please tighten by a few rounds each screw one by one.After all screws are connected, then you start to tighten each screw to the end.DO NOT tighten any screw to the end before you have connected all screws.The assembly requires minimal level of DIY skills if you follow the instructions carefully.

Packing List

		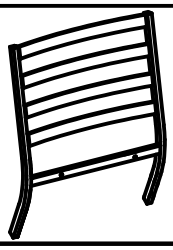	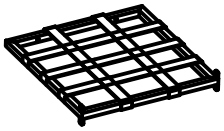	M6*15	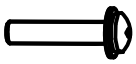 M6*40
A 1pcs	B 1pcs	C 1pc	D 1pc	E 4+1pcs	F 4+1pcs
	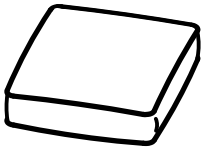	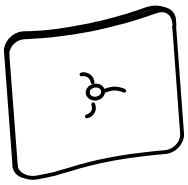			
G 1pc	H 1pc	I 1pc			

WARNING:
Cushions must be put away in rainy and windy days in case they are diminished or blown away.
ASSEMBLY TIPS: Please use the hardware and accessories included in the set. DO NOT use other electrical or manual tools.In order to facilitate the assembly and make your final product firm and stable, please tighten by a few rounds each screw one by one.After all screws are connected, then you start to tighten each screw to the end.
DO NOT tighten any screw to the end before you have connected all screws.
The assembly requires minimal level of DIY skills if you follow the instructions carefully.

ASSEMBLY INSTRUCTIONS

		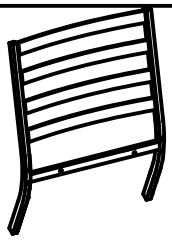	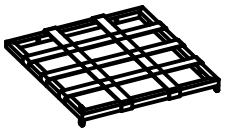	M6*15
A 1pc	B 1pc	C 1pc	D 1pc	E 5pcs
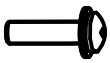 M6*40				
F 5pcs	G 1pc			

1

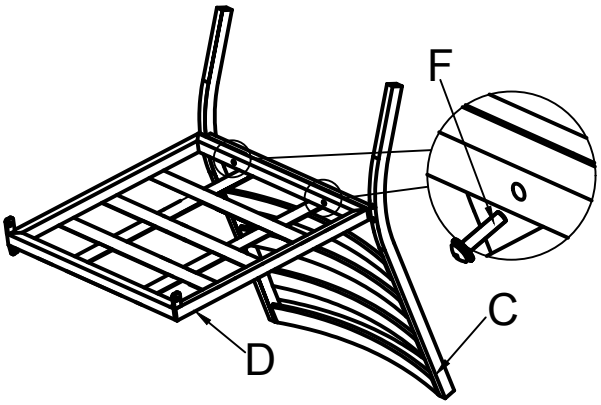

2

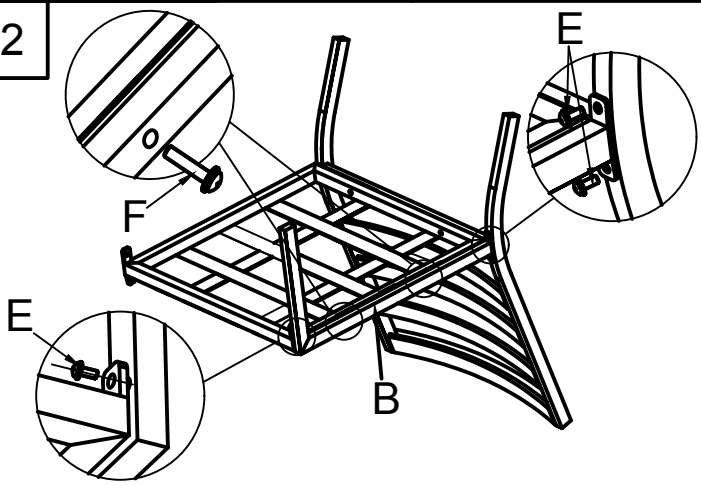

3

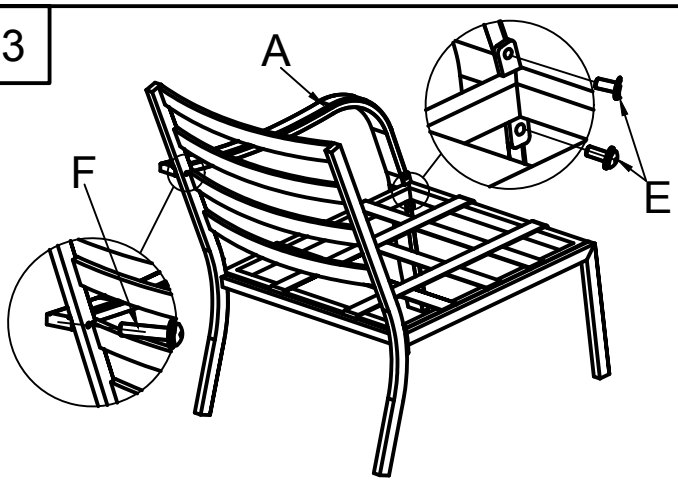

4

ASSEMBLY TIPS:

Please use the hardware and accessories included in the set. DO NOT use other electrical or manual tools.In order to facilitate the assembly and make your final product firm and stable, please tighten by a few rounds each screw one by one.After all screws are connected, then you start to tighten each screw to the end.DO NOT tighten any screw to the end before you have connected all screws.The assembly requires minimal level of DIY skills if you follow the instructions carefully.

Packing List

		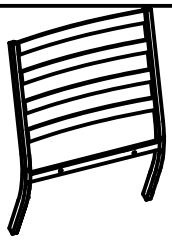	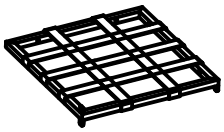	M6*15
A 1pc	B 1pc	C 1pc	D 1pc	E 5+2pcs
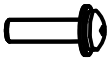 M6*40		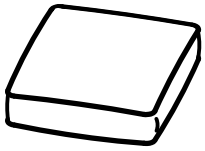	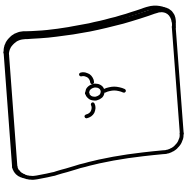	
F 5+2pcs	G 1pc	H 1pc	I 1pc	

WARNING:
Cushions must be put away in rainy and windy days in case they are diminished or blown away.
ASSEMBLY TIPS: Please use the hardware and accessories included in the set. DO NOT use other electrical or manual tools.In order to facilitate the assembly and make your final product firm and stable, please tighten by a few rounds each screw one by one.After all screws are connected, then you start to tighten each screw to the end.
DO NOT tighten any screw to the end before you have connected all screws.
The assembly requires minimal level of DIY skills if you follow the instructions carefully.

ASSEMBLY INSTRUCTIONS

		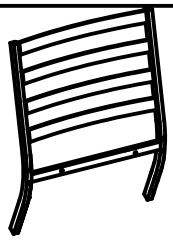	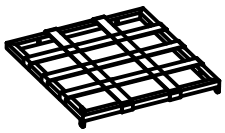	M6*15
A 1pc	B 1pc	C 1pc	D 1pc	E 5pcs
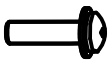 M6*40				
F 5pcs	G 1pc			

1

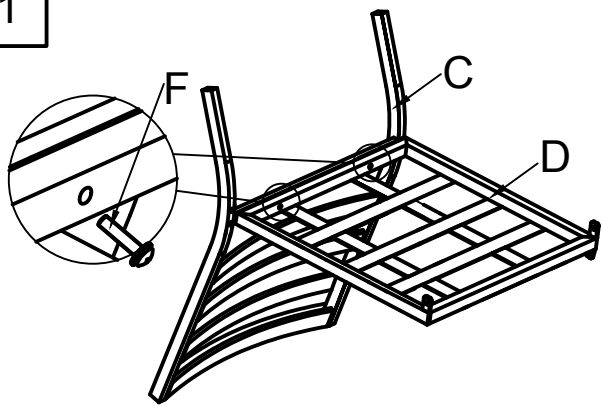

2

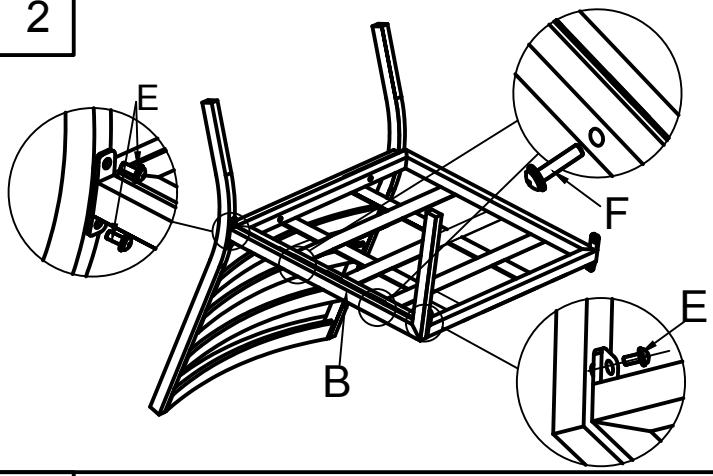

3

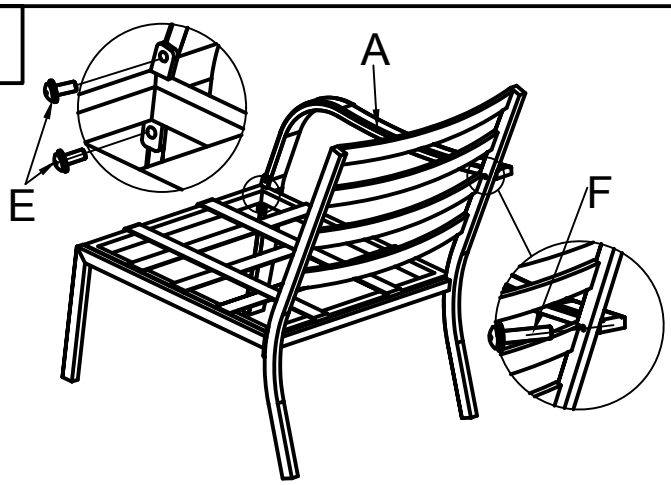

4

ASSEMBLY TIPS:

Please use the hardware and accessories included in the set. DO NOT use other electrical or manual tools.In order to facilitate the assembly and make your final product firm and stable, please tighten by a few rounds each screw one by one.After all screws are connected, then you start to tighten each screw to the end.DO NOT tighten any screw to the end before you have connected all screws.The assembly requires minimal level of DIY skills if you follow the instructions carefully.

Packing List

		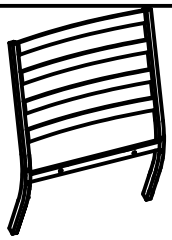	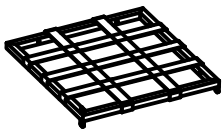	M6*15
A 1pc	B 1pc	C 1pc	D 1pc	E 5+2pcs
M6*40		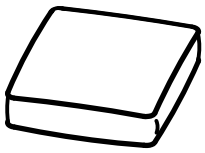	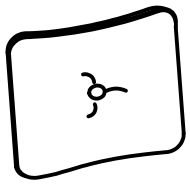	
F 5+2pcs	G 1pc	H 1pc	I 1pc	

WARNING:
Cushions must be put away in rainy and windy days in case they are diminished or blown away.
ASSEMBLY TIPS: Please use the hardware and accessories included in the set. DO NOT use other electrical or manual tools.In order to facilitate the assembly and make your final product firm and stable, please tighten by a few rounds each screw one by one.After all screws are connected, then you start to tighten each screw to the end.
DO NOT tighten any screw to the end before you have connected all screws.
The assembly requires minimal level of DIY skills if you follow the instructions carefully.

ASSEMBLY INSTRUCTIONS

			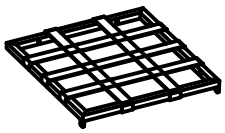	M6*15
A 1pc	B 1pc	C 1pc	D 1pc	E 6pcs
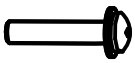 M6*40				
F 6pcs	G 1pc			

1

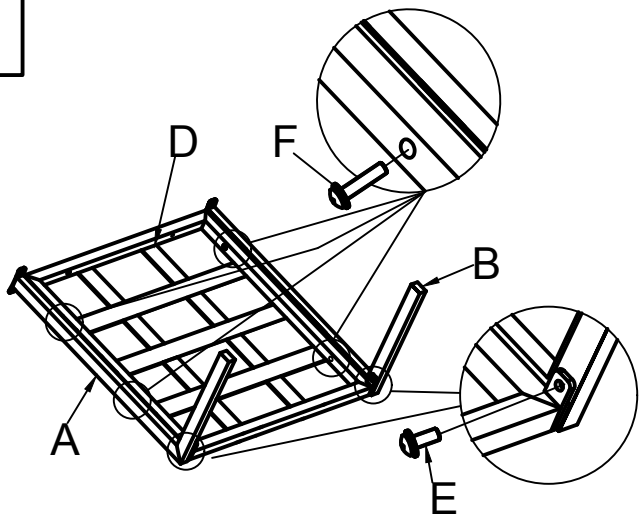

2

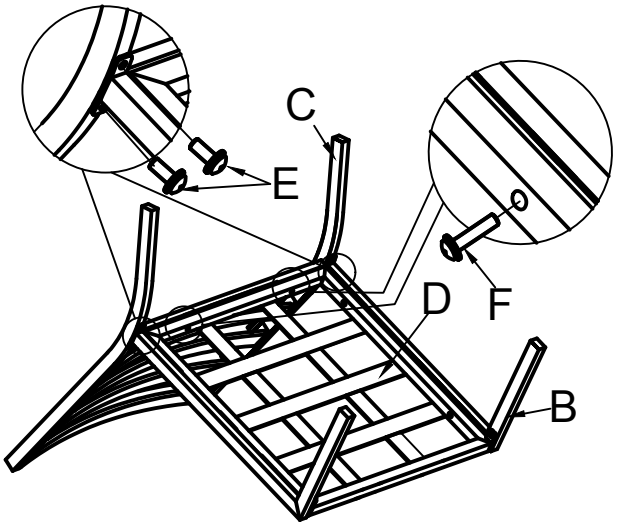

3

ASSEMBLY TIPS:

Please use the hardware and accessories included in the set. DO NOT use other electrical or manual tools.In order to facilitate the assembly and make your final product firm and stable, please tighten by a few rounds each screw one by one.After all screws are connected, then you start to tighten each screw to the end.DO NOT tighten any screw to the end before you have connected all screws.The assembly requires minimal level of DIY skills if you follow the instructions carefully.

Packing List

			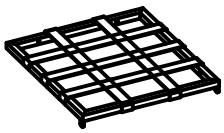	M6*15
A 1pc	B 1pc	C 1pc	D 1pc	E 6+2pcs
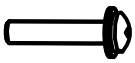 M6*40		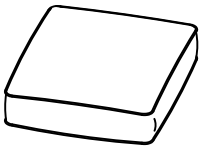	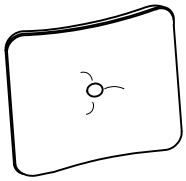	
F 6+2pcs	G 1pc	H 1pc	I 1pc	

WARNING:
Cushions must be put away in rainy and windy days in case they are diminished or blown away.
ASSEMBLY TIPS: Please use the hardware and accessories included in the set. DO NOT use other electrical or manual tools.In order to facilitate the assembly and make your final product firm and stable, please tighten by a few rounds each screw one by one.After all screws are connected, then you start to tighten each screw to the end.
DO NOT tighten any screw to the end before you have connected all screws.
The assembly requires minimal level of DIY skills if you follow the instructions carefully.

ASSEMBLY INSTRUCTIONS

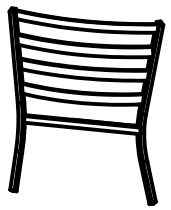	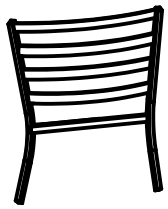	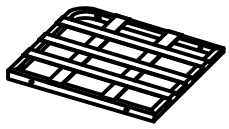		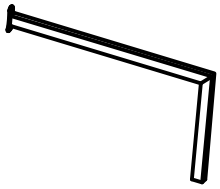	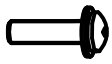 M6*40
A 1pc	B 1pc	C 1pc	D 1pc	E 1pc	F 8pcs
M6*15	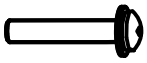 M6*50	ø13*ø6.5*1.0	M6		M6
G 5pcs	H 3pcs	I 3pcs	J 3pcs	K 1pc	L 1pc

1

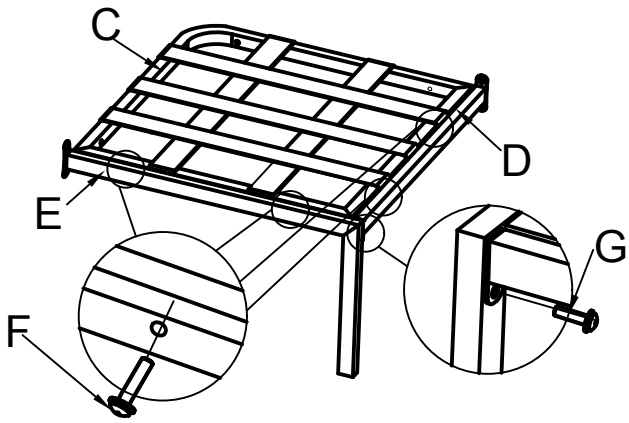

2

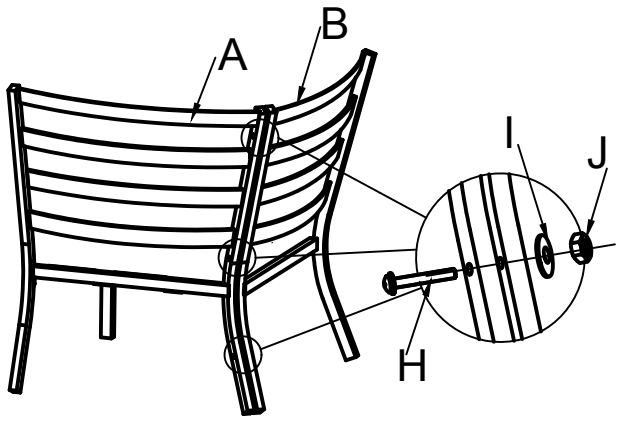

3

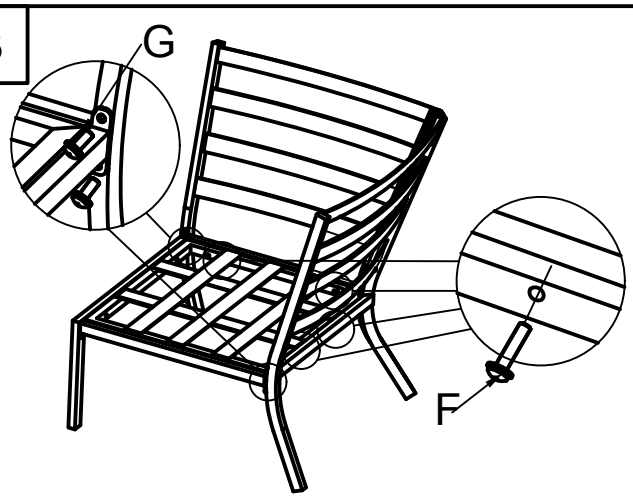

4

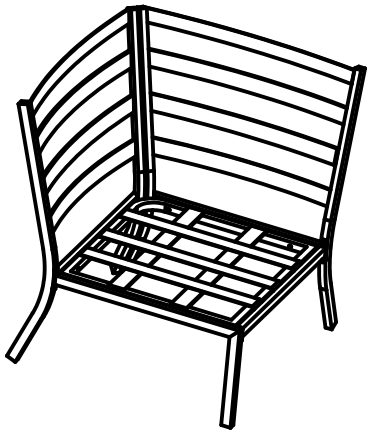

ASSEMBLY TIPS:

Please use the hardware and accessories included in the set. DO NOT use other electrical or manual tools.In order to facilitate the assembly and make your final product firm and stable, please tighten by a few rounds each screw one by one.After all screws are connected, then you start to tighten each screw to the end.DO NOT tighten any screw to the end before you have connected all screws.The assembly requires minimal level of DIY skills if you follow the instructions carefully.

Packing List

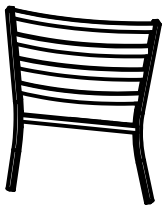	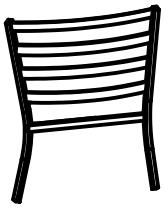		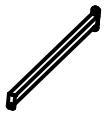	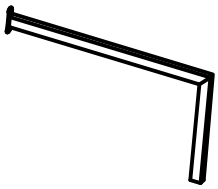	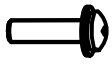 M6*40
A 1pc	B 1pc	C 1pc	D 1pc	E 1pc	F 8+2pcs
M6*15	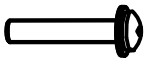 M6*50	ø13*ø6.5*1.0	M6		M6
G 5+2pcs	H 3+1pcs	I 3+1pcs	J 3+1pcs	K 1pc	L 1pc
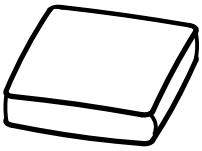	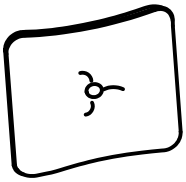	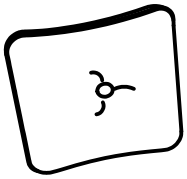			
M 1pc	N 1pc	O 1pc			

WARNING:
Cushions must be put away in rainy and windy days in case they are diminished or blown away.
ASSEMBLY TIPS: Please use the hardware and accessories included in the set. DO NOT use other electrical or manual tools.In order to facilitate the assembly and make your final product firm and stable, please tighten by a few rounds each screw one by one.After all screws are connected, then you start to tighten each screw to the end.
DO NOT tighten any screw to the end before you have connected all screws.
The assembly requires minimal level of DIY skills if you follow the instructions carefully.

ASSEMBLY INSTRUCTIONS

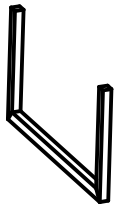	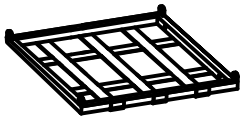	M6*15	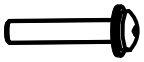 M6*40	
A 2pcs	B 1pc	C 4pcs	D 4pcs	E 1pc

1

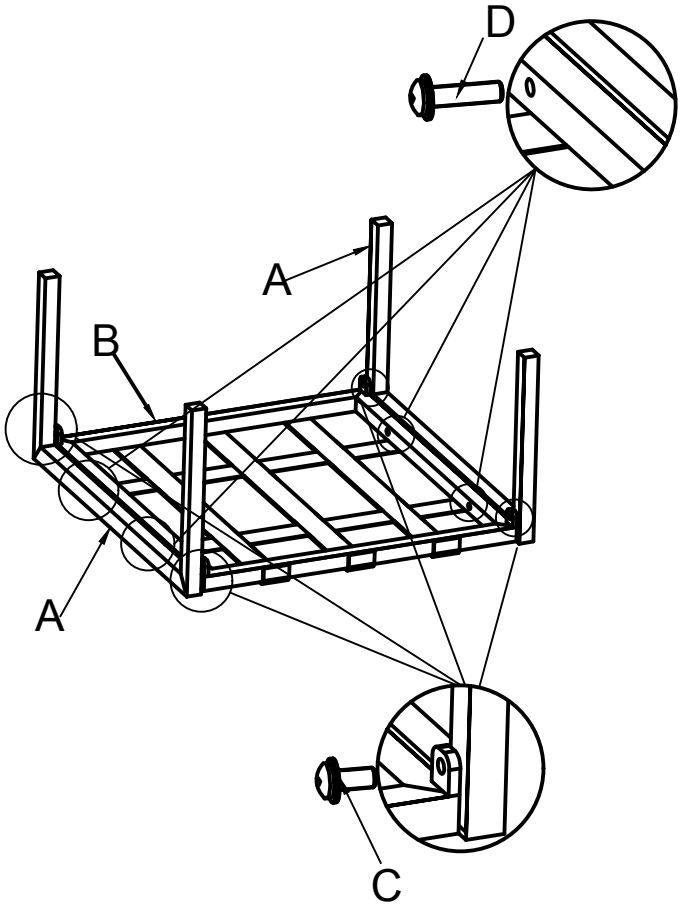

2

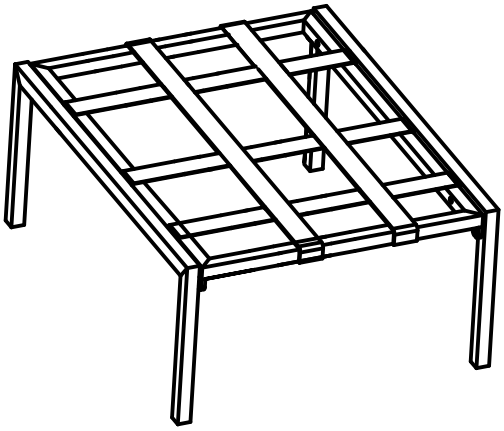

ASSEMBLY TIPS:
Please use the hardware and accessories included in the set. DO NOT use other electrical or manual tools.In order to facilitate the assembly and make your final product firm and stable, please tighten by a few rounds each screw one by one.After all screws are connected, then you start to tighten each screw to the end.DO NOT tighten any screw to the end before you have connected all screws.The assembly requires minimal level of DIY skills if you follow the instructions carefully.

Packing List

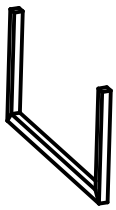	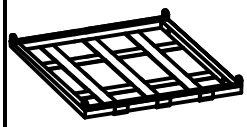	M6*15	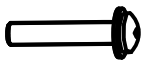 M6*40		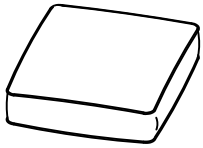
A 2pcs	B 1pc	C 4+1pcs	D 4+1pcs	E 1pc	F 1pc

WARNING:
Cushions must be put away in rainy and windy days in case they are diminished or blown away.
ASSEMBLY TIPS: Please use the hardware and accessories included in the set. DO NOT use other electrical or manual tools.In order to facilitate the assembly and make your final product firm and stable, please tighten by a few rounds each screw one by one.After all screws are connected, then you start to tighten each screw to the end.
DO NOT tighten any screw to the end before you have connected all screws.
The assembly requires minimal level of DIY skills if you follow the instructions carefully.

ASSEMBLY INSTRUCTIONS

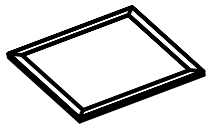	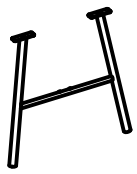		M6*15	
A 1pc	B 2pcs	C 1pc	D 12pcs	E 1pc

1

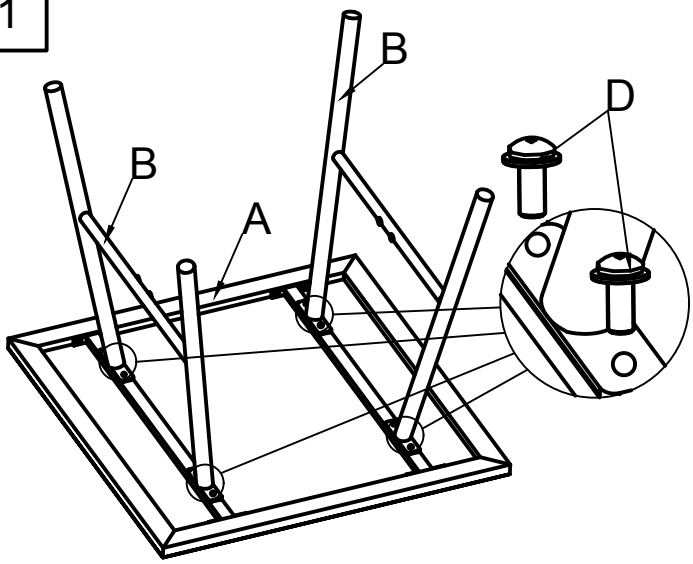

2

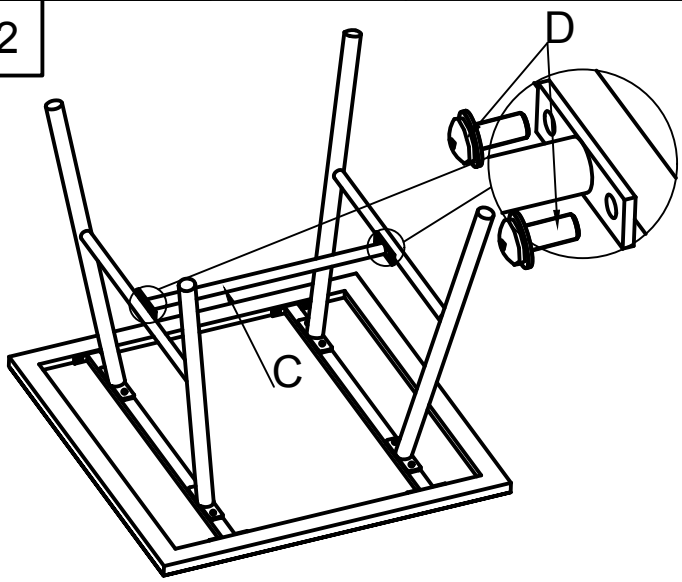

3

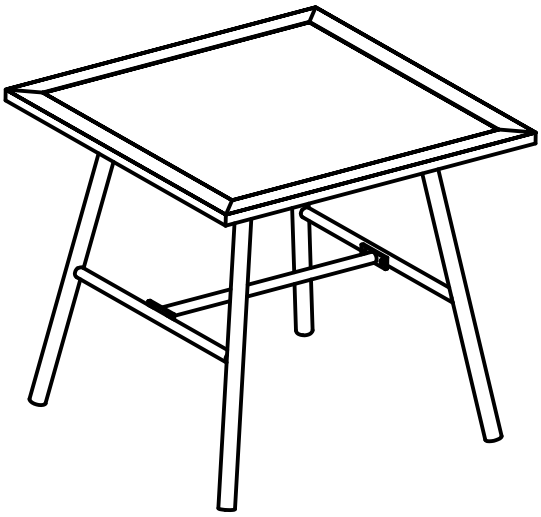

4

ASSEMBLY TIPS:

Please use the hardware and accessories included in the set. DO NOT use other electrical or manual tools.In order to facilitate the assembly and make your final product firm and stable, please tighten by a few rounds each screw one by one.After all screws are connected, then you start to tighten each screw to the end.DO NOT tighten any screw to the end before you have connected all screws.The assembly requires minimal level of DIY skills if you follow the instructions carefully.

Packing List

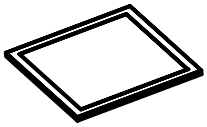	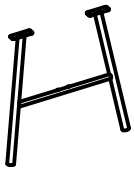		M6*15		
A 1pc	B 2pcs	C 1pc	D 12+3pcs	E 1pc	

WARNING:
Cushions must be put away in rainy and windy days in case they are diminished or blown away.
ASSEMBLY TIPS: Please use the hardware and accessories included in the set. DO NOT use other electrical or manual tools.In order to facilitate the assembly and make your final product firm and stable, please tighten by a few rounds each screw one by one.After all screws are connected, then you start to tighten each screw to the end.
DO NOT tighten any screw to the end before you have connected all screws.
The assembly requires minimal level of DIY skills if you follow the instructions carefully.

ASSEMBLY INSTRUCTIONS

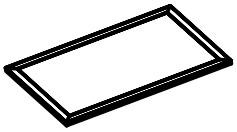	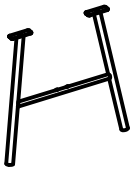		M6*15	
A 1pc	B 2pcs	C 1pc	D 12pcs	E 1pc

1

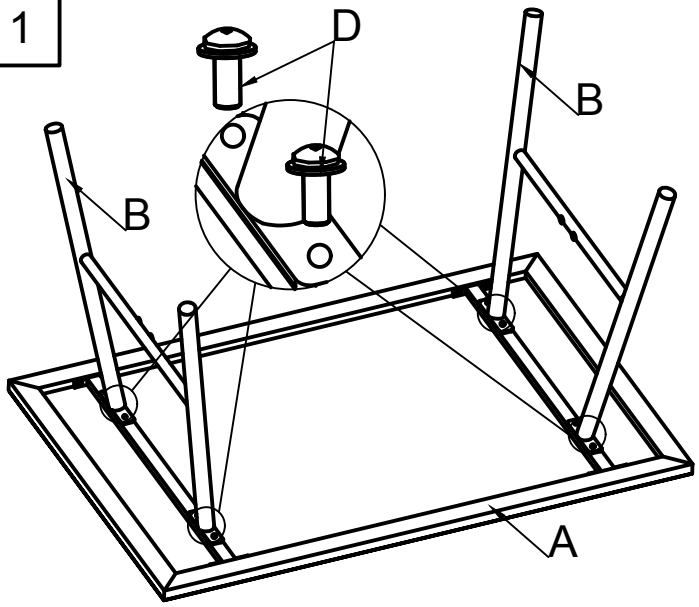

2

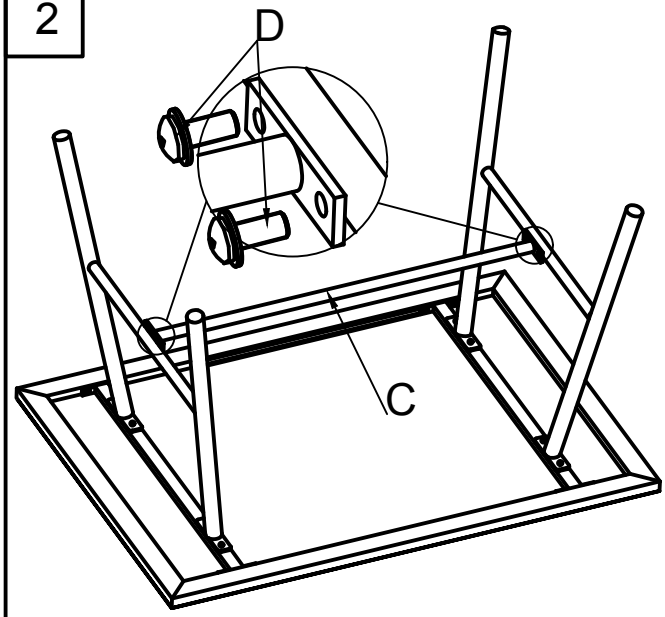

3

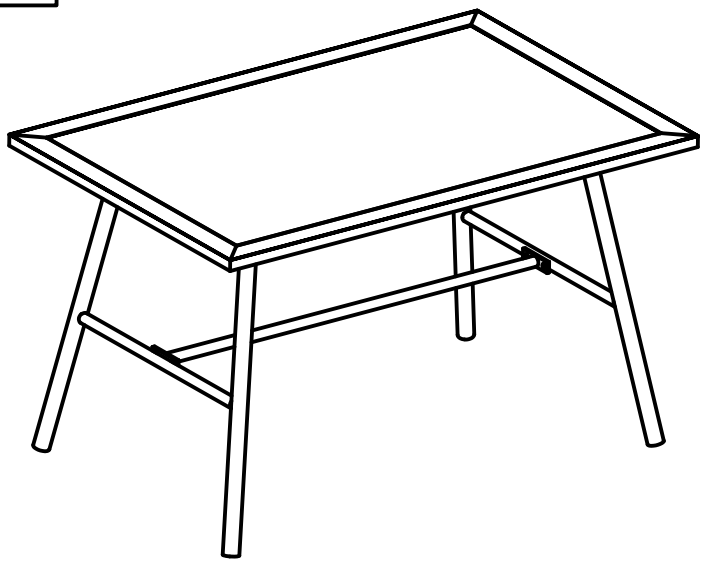

4

ASSEMBLY TIPS:

Please use the hardware and accessories included in the set. DO NOT use other electrical or manual tools.In order to facilitate the assembly and make your final product firm and stable, please tighten by a few rounds each screw one by one.After all screws are connected, then you start to tighten each screw to the end.DO NOT tighten any screw to the end before you have connected all screws.The assembly requires minimal level of DIY skills if you follow the instructions carefully.

Packing List

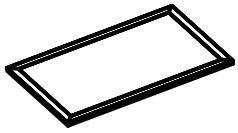	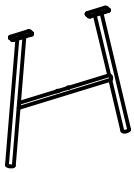		M6*15		
A 1pc	B 2pcs	C 1pc	D 12+3pcs	E 1pc	

WARNING:
Cushions must be put away in rainy and windy days in case they are diminished or blown away.
ASSEMBLY TIPS: Please use the hardware and accessories included in the set. DO NOT use other electrical or manual tools.In order to facilitate the assembly and make your final product firm and stable, please tighten by a few rounds each screw one by one.After all screws are connected, then you start to tighten each screw to the end.
DO NOT tighten any screw to the end before you have connected all screws.
The assembly requires minimal level of DIY skills if you follow the instructions carefully.