ASSEMBLY INSTRUCTIONS

Thank you for you purchase.
Before assembly, please read these instructions.
Please read all warnings.
Store this instruction manual for future reference.

Product Size	Approximately 398 Width x 1800 Length x 473 Height (MM)		
Main Materials	Particle Board		
Weight Capacity	Top insert: About 30KG, Shelf insert: About 10KG, ※ These are measured figures, not guaranteed figures.		
Time To Assembly	About 60 Minutes	Update Date	6/7/2023

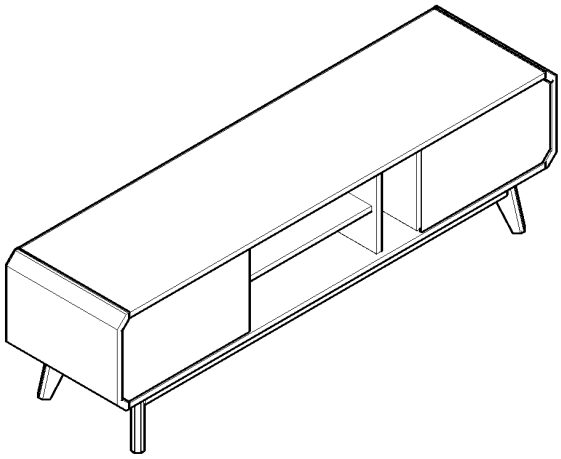

Assembly Warning

- Assembling with 2 or more people is recommended.
- Please assemble at a spacious and flat place
- Please place blankets or cardboard so floor or walls will not be scratched
- Please ventilate the area if there is a strong glue odor after opening the product
- Please follow assembly instructions
- Please have the below tools ready before assembling
  - Screwdriver, Scissors or Blade Box cutter, Rubber hammer, Drill

Hardware

Before assembly, inspect unit for missing parts. Be sure that children do not accidentally swallow these parts.
※Same sized parts are in a bag. Please check the size of the screws.

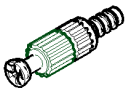

A Minifix M5x24MM **14 Pcs**

B Minifix Casing **14 Pcs**

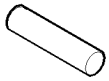

C Wood Dowel M8x30MM **17 Pcs**

D Iron Shelf Support **4 Pcs**

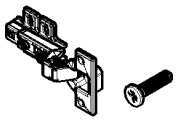

E Hydraulic Hinges 7/8" **4 Pcs**
M3.5x16MM **24 Pcs**

F Screw M7x50MM **10 Pcs**

G White Leg Pin **5 Pcs**

H Screw M6x50MM **3 Pcs**

I Screw M4x28MM **4 Pcs**

J Screw M3.5x16MM **9 Pcs**

K Allen Key **1 Pc**

Parts

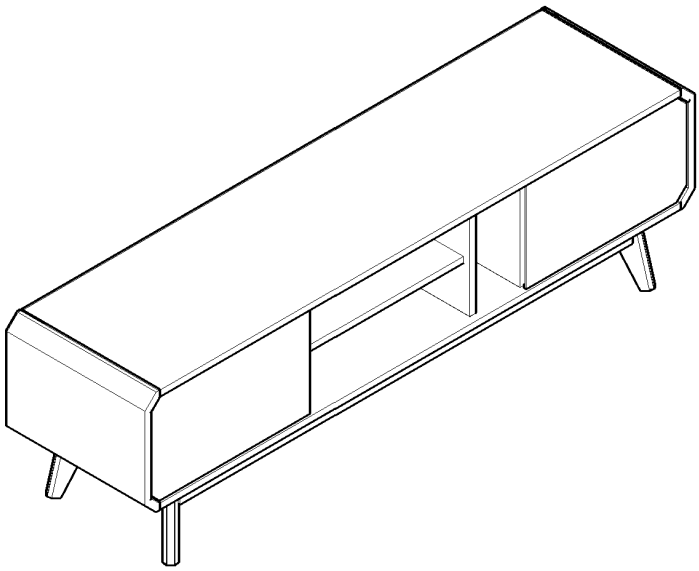

Assembly Information

- Assemble screws
- Assemble Wood Dowels
- Assemble Minifix

1. Screw up to half point to make sure all spots are lined up

2. Tighten all screws

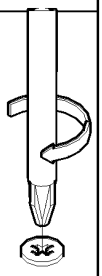

1. Insert dowels into holes tightly

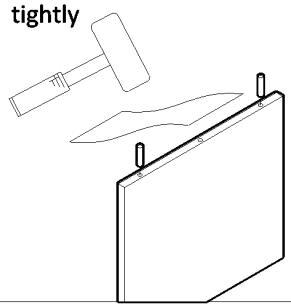

2. Attach the insert holes along with dowels

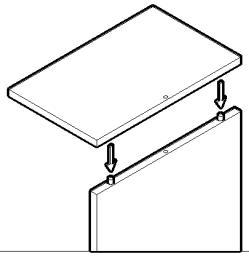

1. Screw Up Minifix M5X24MM into holes. Tighten all Minifix.

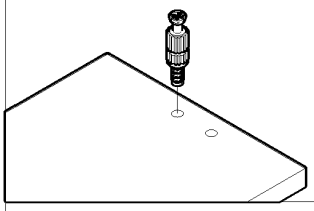

2. Insert Minifix Casing into holes. Set the arrow of the screw up toward the nut slot.

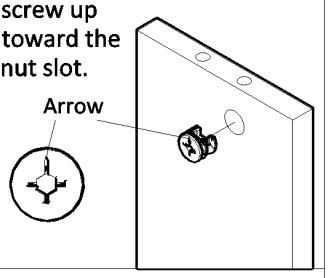

3. Insert Minifix M5X24mm and Minifix Casing togehter into the slot

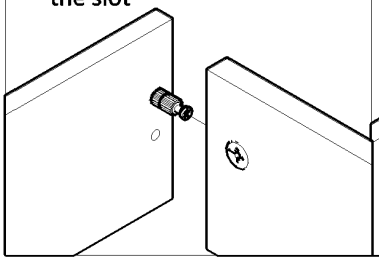

4. Tighten the cam lock screw
※Use Allen Key or Screwdriver

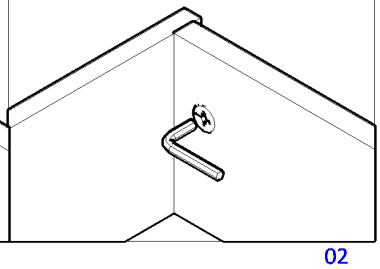

02

Parts

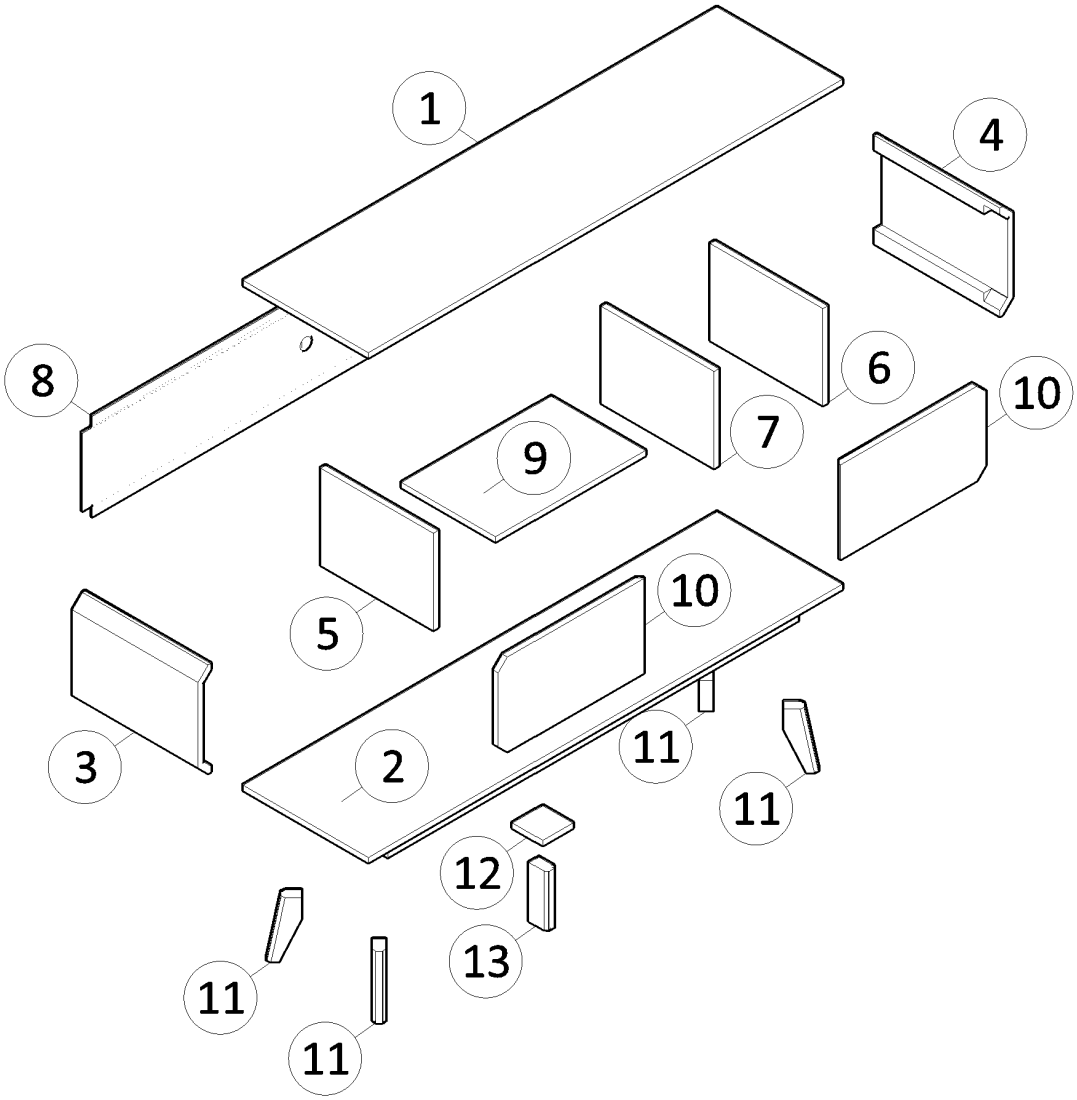

1	Top Panel	**1 Pc**	9	Shelf Panel	**1 Pc**
2	Bottom Panel	**1 Pc**	10	Door Panel	**2 Pcs**
3	Side Panel (L)	**1 Pc**	11	Leg Panel	**4 Pcs**
4	Side Panel (R)	**1 Pc**	12	Leg Support Panel (C)	**1 Pc**
5	Center Panel (L)	**1 Pc**	13	Leg Panel (C)	**1 Pc**
6	Center Panel (R)	**1 Pc**			
7	Center Panel (C)	**1 Pc**			
8	Back Mdf Board	**1 Pc**			

03

Assembly Step

Failure to follow these directions could cause poor strength or stability.
Insert screws loose to line up with slots then tighten up each screw.

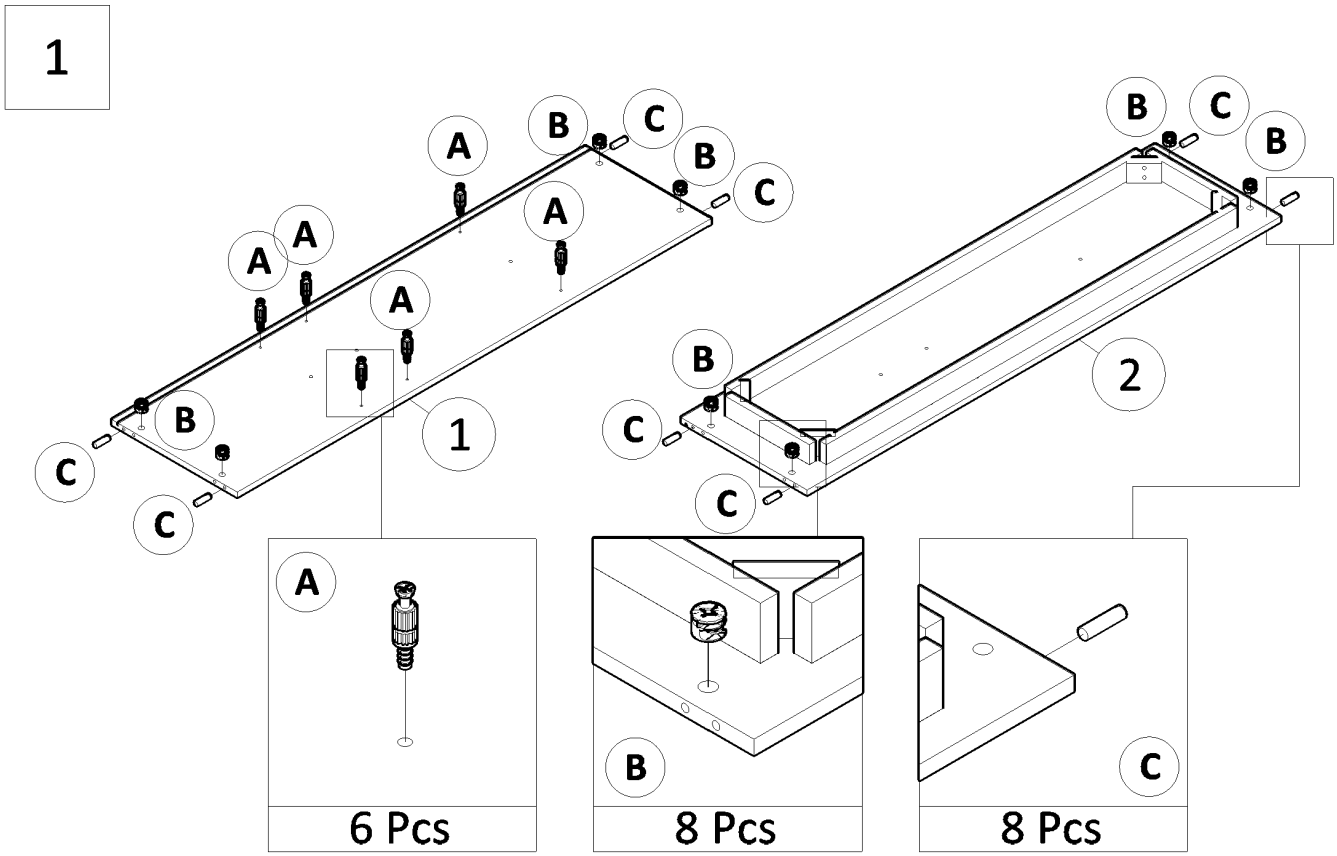

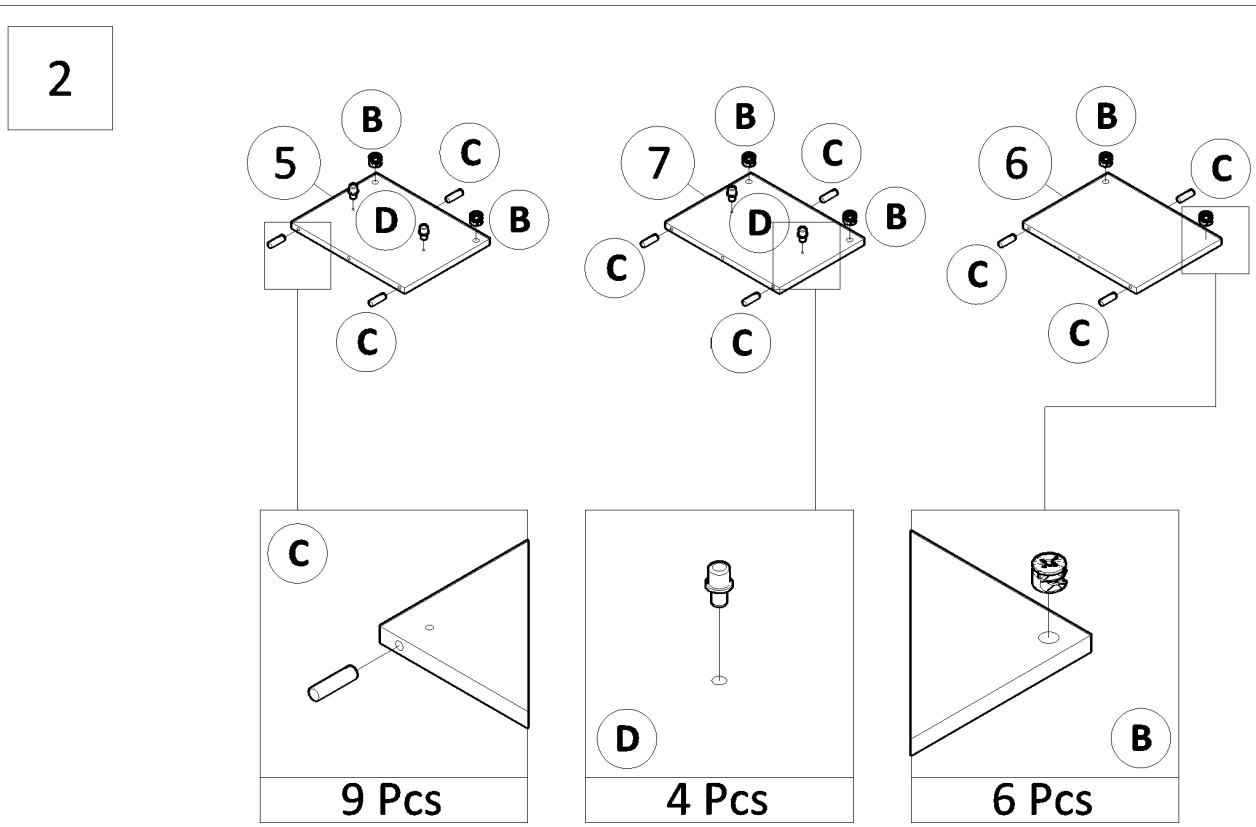

04

Assembly Step (Continue)

3

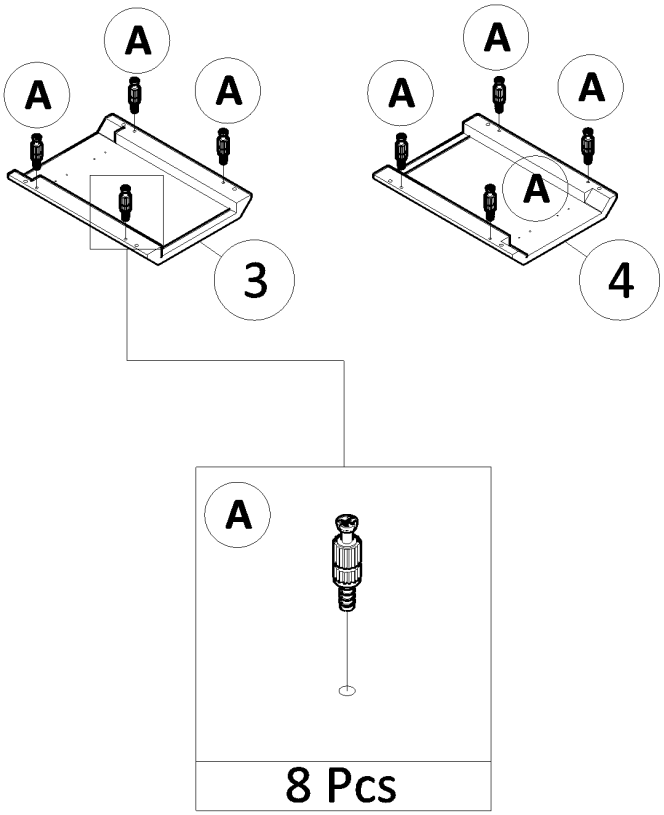

4

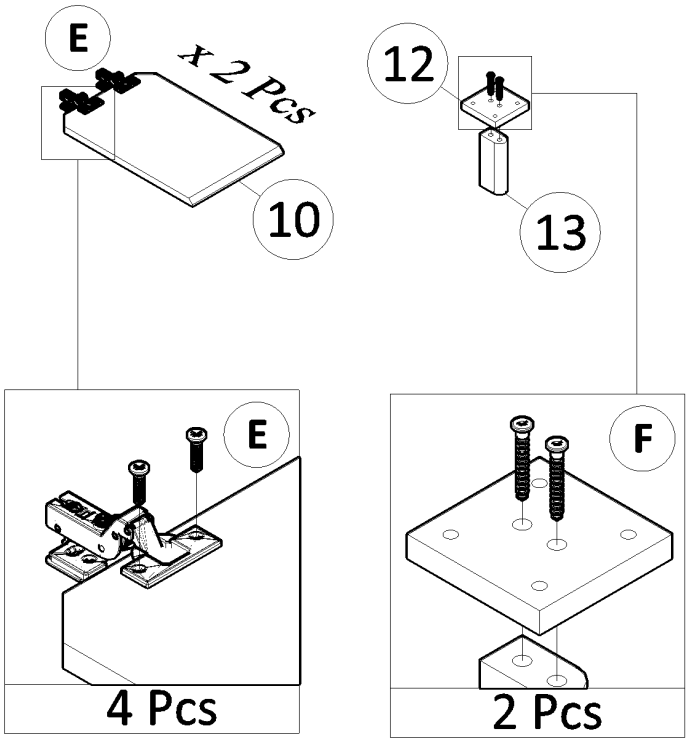

Assembly Step (Continue)

5

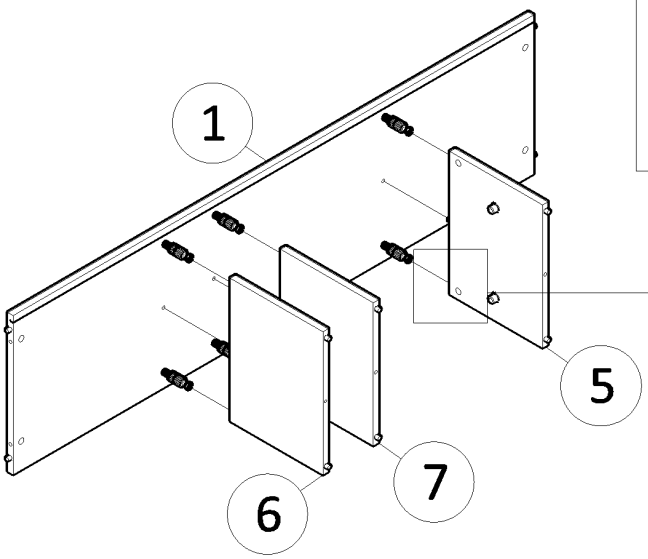

Installation:
As shown, the head of minifix housing goes into the open mouth of the mini fix bolt. Use Allen Key then turn the minifix housing so it tightens over the mini fix bolt.

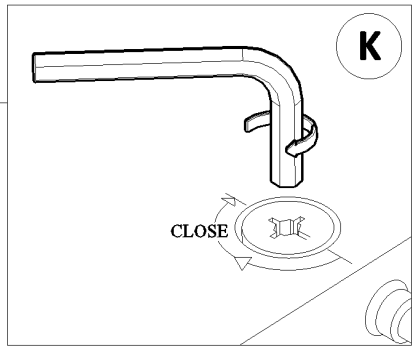

6

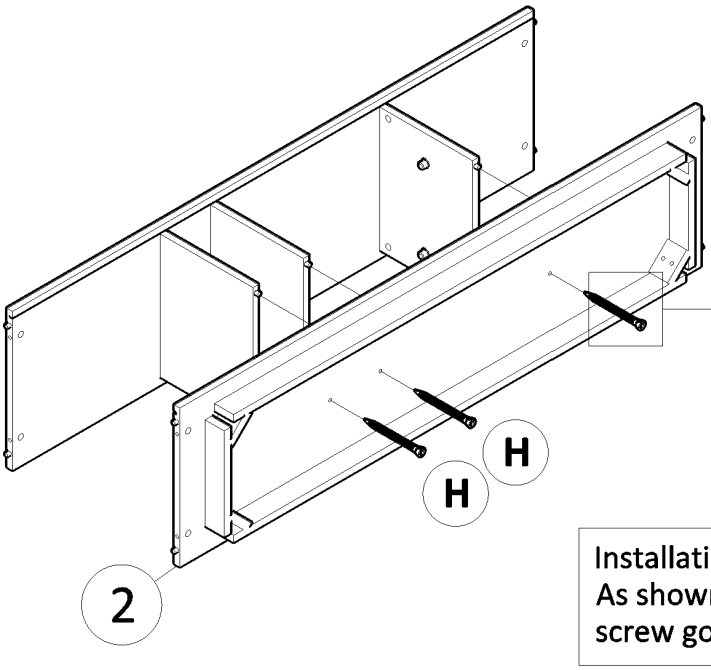

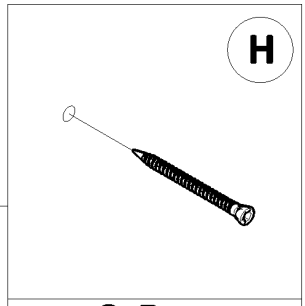

3 Pcs

Installation:
As shown, use the allen key to make the screw goes into the hole until the screw is tight.

06

Assembly Step (Continue)

7

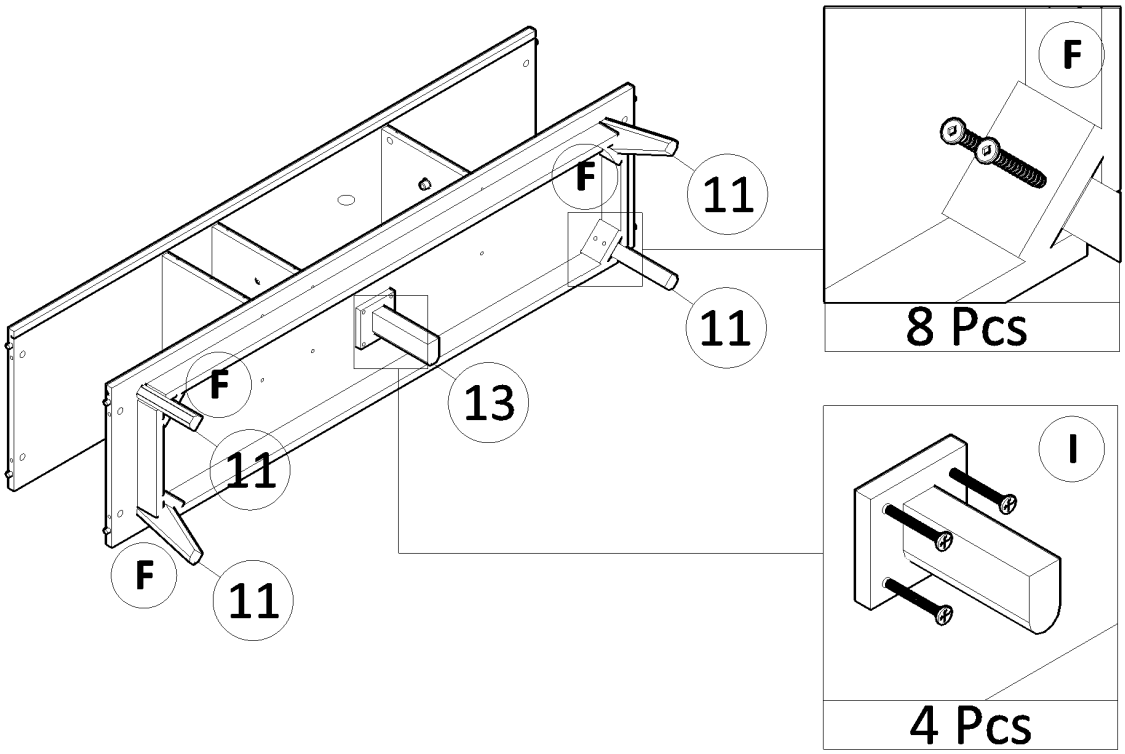

8

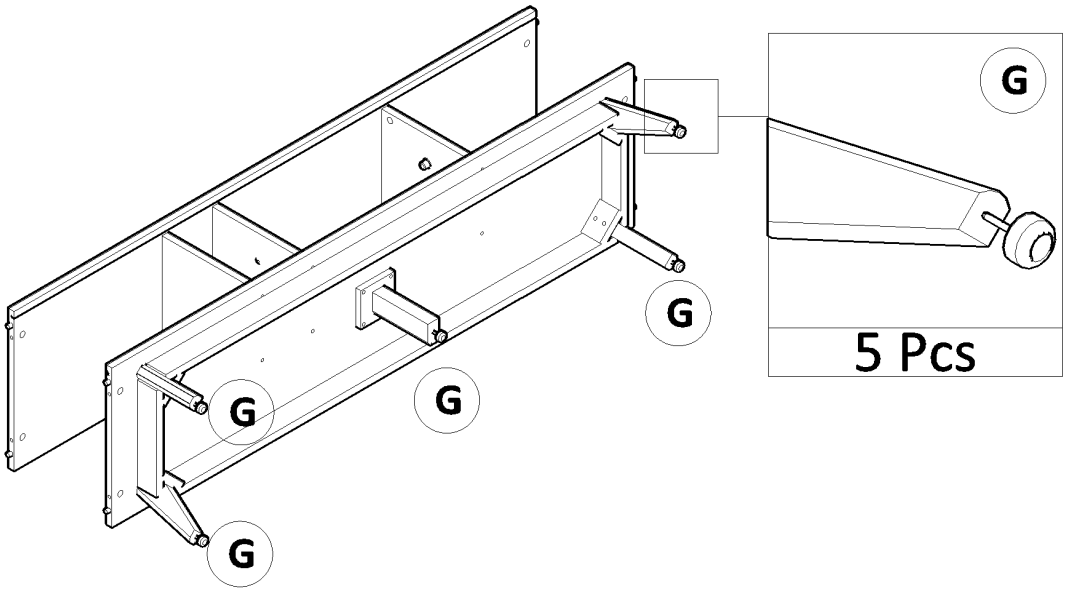

07

Assembly Step (Continue)

9

Installation:
As shown, the head of minifix housing goes into the open mouth of the mini fix bolt. Use Allen Key then turn the minifix housing so it tightens over the mini fix bolt.

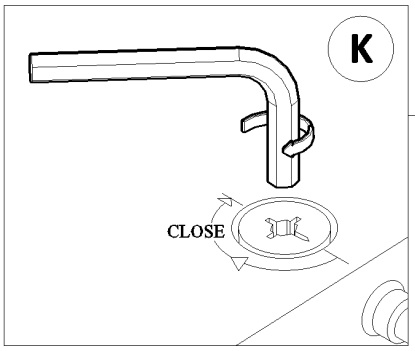

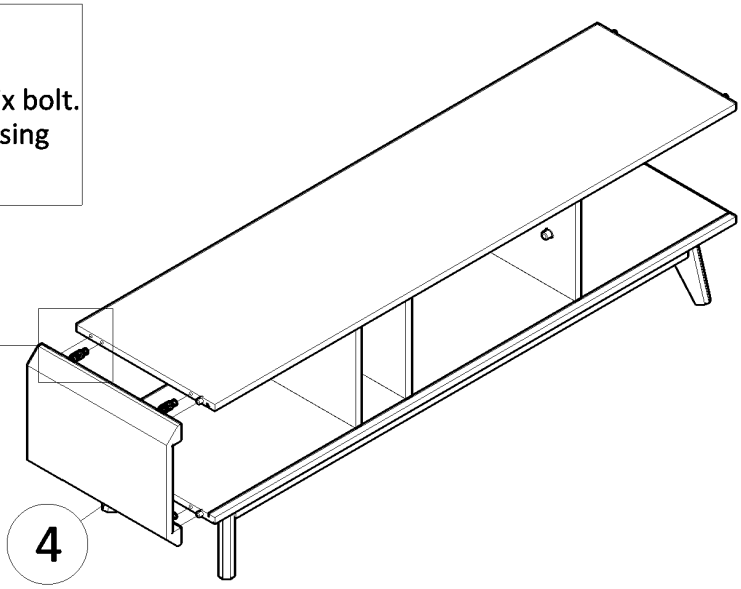

10

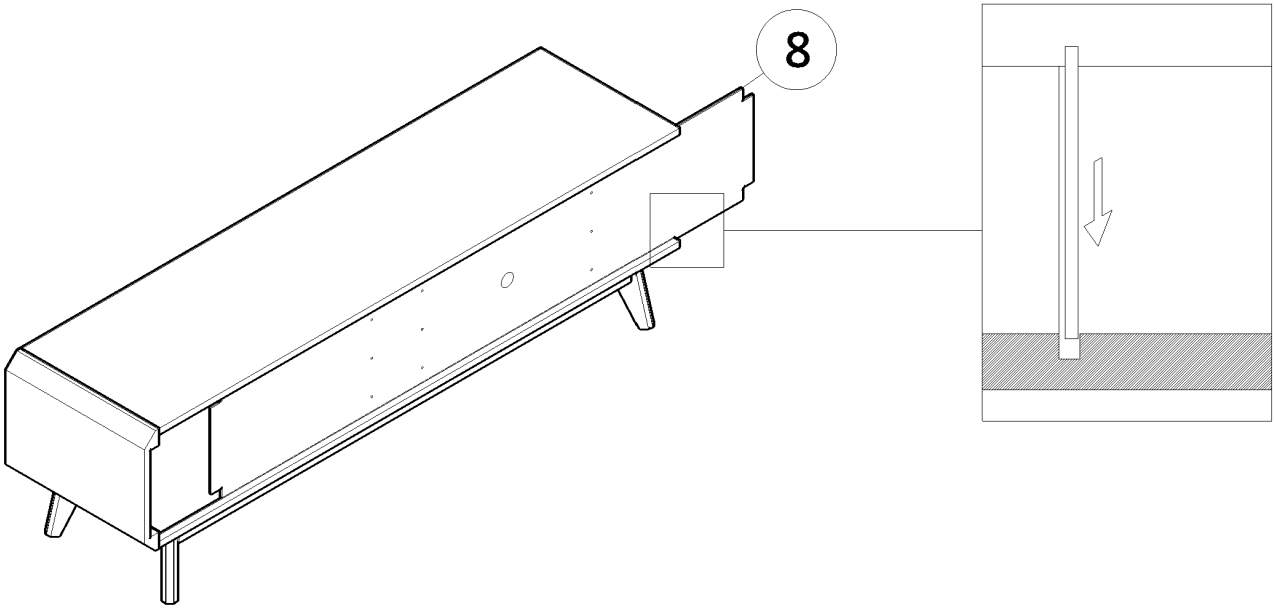

08

Assembly Step (Continue)

11

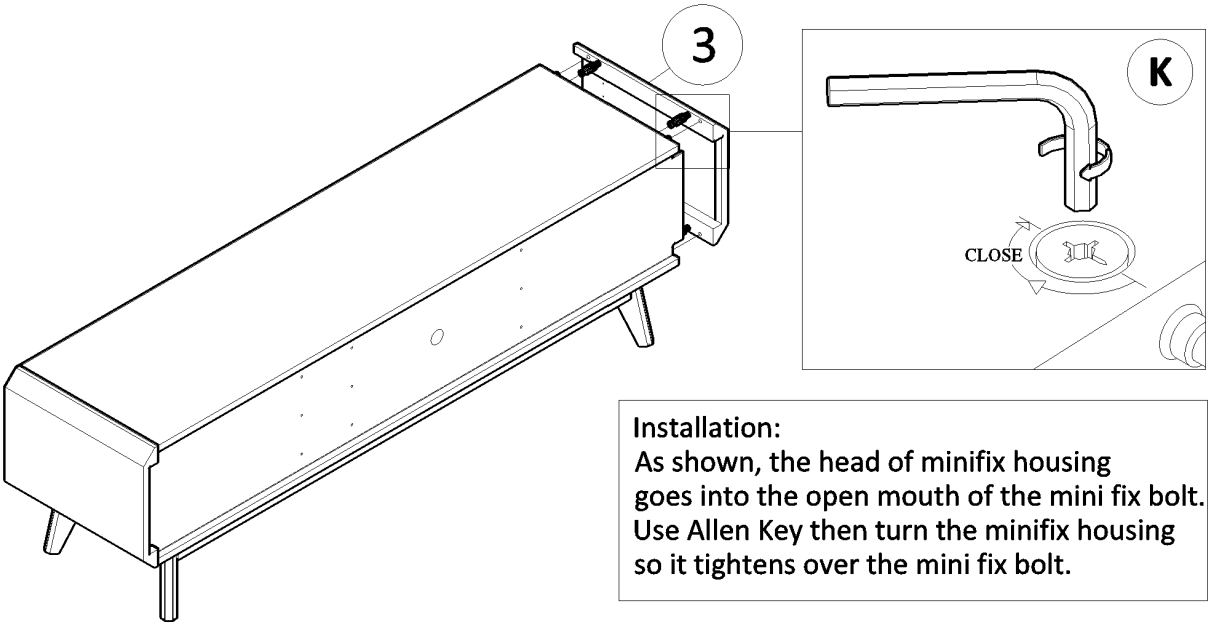

Installation:
As shown, the head of minifix housing goes into the open mouth of the mini fix bolt. Use Allen Key then turn the minifix housing so it tightens over the mini fix bolt.

12

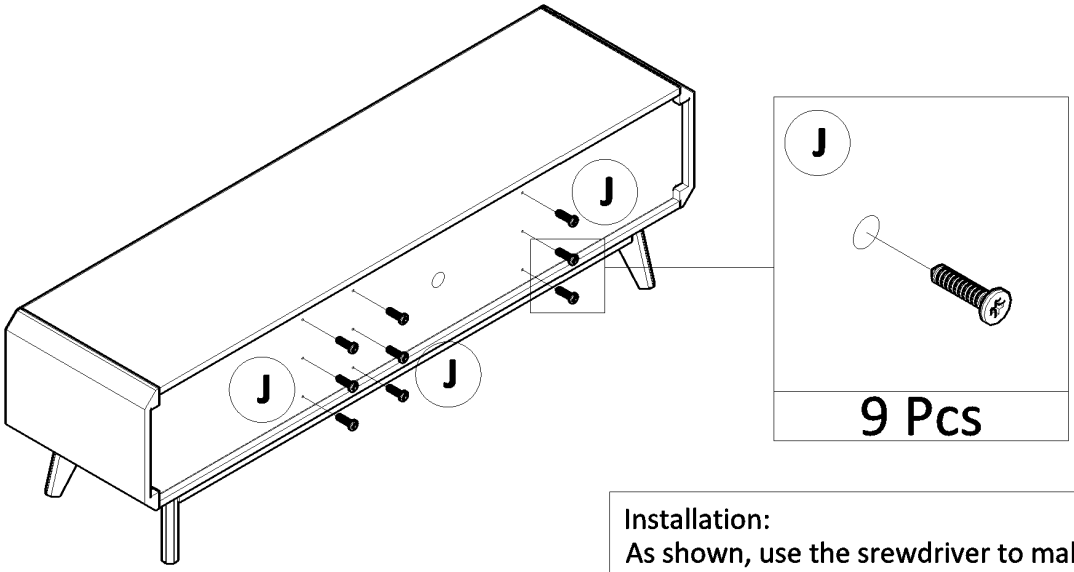

Installation:
As shown, use the srewdriver to make the screw goes into the hole until the screw is tight.

Assembly Step (Continue)

13

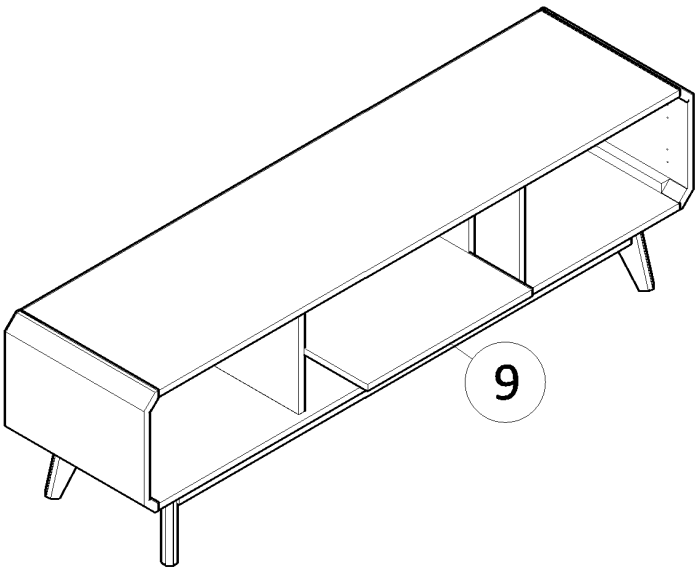

14

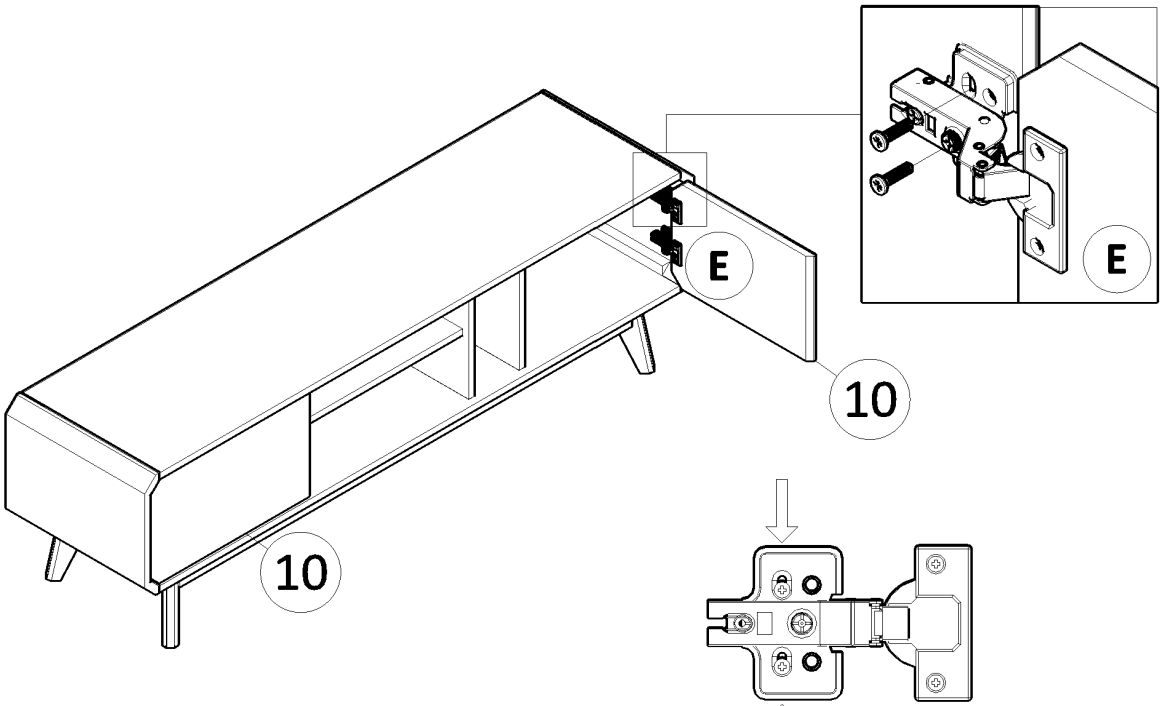

Adjust the door by moving it up and down or left
and right then tighten the screws.

Assembly Step (Continue)

15

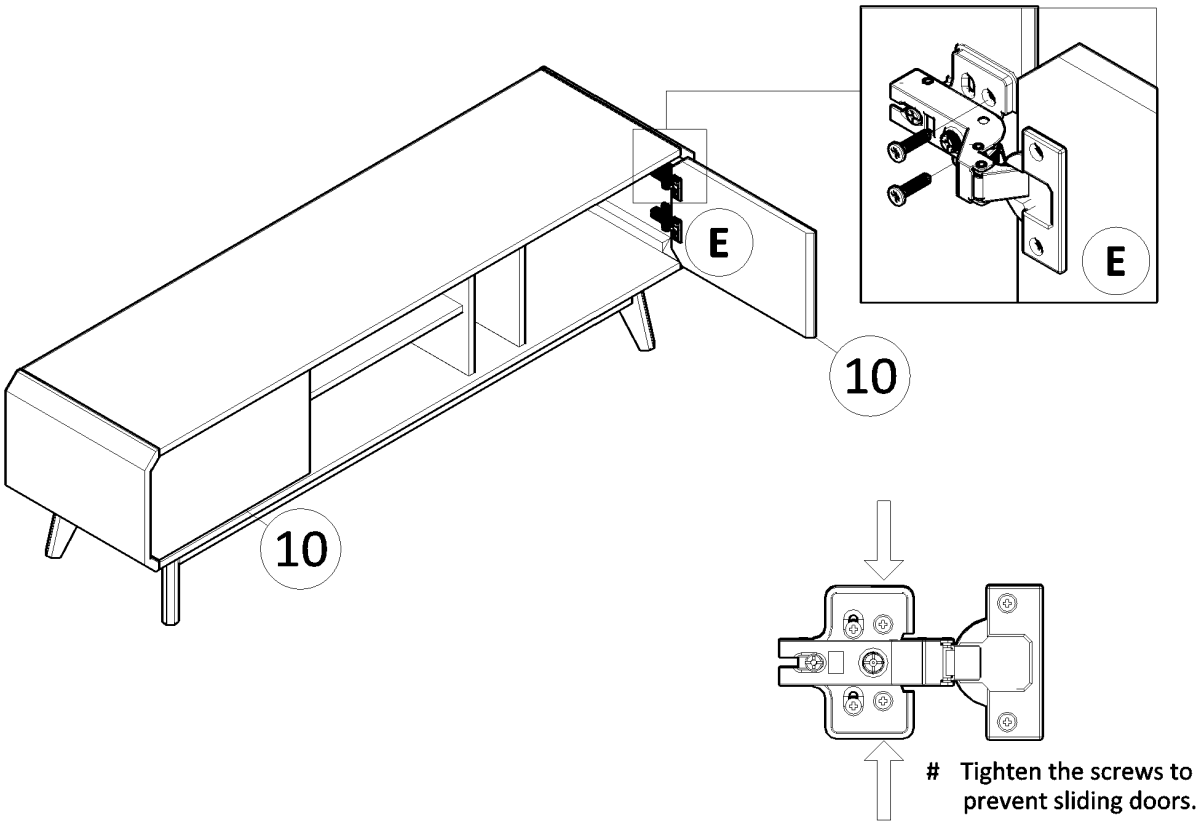

16 COMPLETED

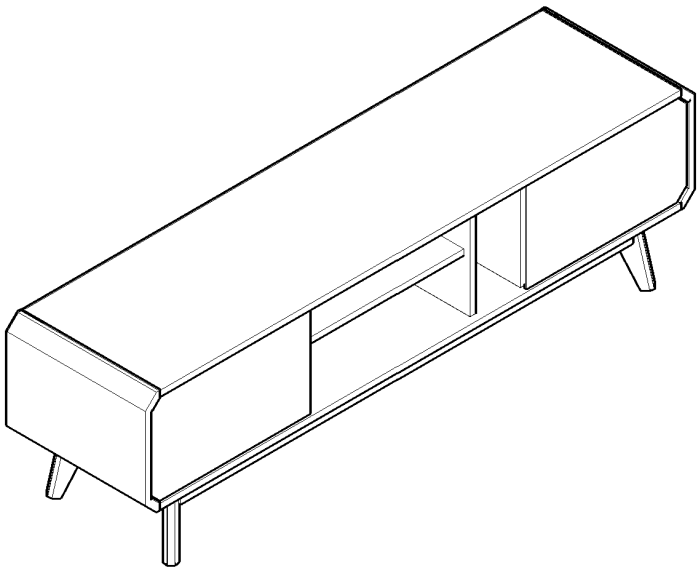

Safety

Please read the below warnings before use.
Failure to follow these warnings could result in serious injury.

CAUTION !!!

Purpose

- Do not use this unit except for original application
- This unit is for household use. Do not use it for wholesale.
- This unit is for indoor use. Do not use it outside.

Assembly

- Assembling with 2 or more people is recommended
- Please assemble at a spacious and flat place
- Please place blankets or cardboard so floor or walls will not be scratched
- Please ventilate the area if there is strong glue odor after opening the product
- Please follow assembly instructions

Placing The Unit

- Store the unit on a flat surface.
- Place a mat under the unit if you place it on wood floors for floor protection
- Do not place the unit in areas where conditions are extreme, such as direct sun or a humid place
- Do not place the unit in a hot or humid area, such as near the heater or fireplace

Usage

- Please check your surroundings when you use this unit
- Do not place any hot or wet objects on the unit
- Remove all objects on the unit when you move it
- Do not leave water or wet objects on the surface.
- Do not use it for toys
- Do not stand on it or use it for a step stool.
- Do not overload only the top drawers. Load the same amount to help prevent tipping of the unit.
- Do not leave drawers open or put pressure on opened drawers to help prevent falling or wrecking.
- Do not stand or put pressure on opened drawers.
- Colors could fade
- Please open drawers slowly
- Make sure you do not catch your finger when you use the drawer.
- Weight Capacity Top insert: About 30KG , Shelf insert: About 10KG,

※ These are measured figures, not guaranteed figures

Cleaning

- Please check all assembled parts are tight regularly. (About once a month)
- Use dry soft cloths for dust and spots
- For heavy spots, use clothes with neutral detergent then dry in a well ventilated area.
- Do not use if any parts are broken.
- Please recycle the unit or its package depending on your city rules.

HOW TO ADJUST GLASS/DOORS

● There is a gap between the door and the shelf with doors closed

Loosen the back adjustable screw which is one of the two screws looking from the front while supporting the doors, adjust the door by moving it back and forth, then tighten the back screw.

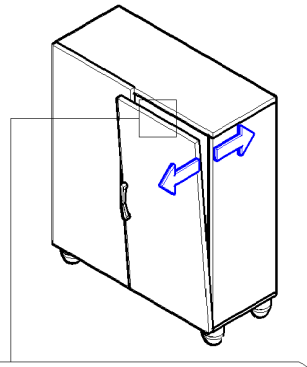

If there is a gap between the doors on the top.

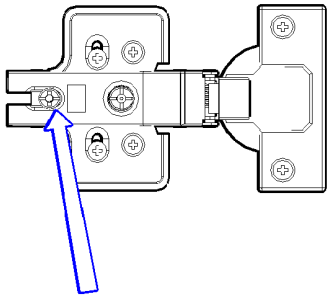

Loosen this screw, adjust by moving back and forth

● There is a gap in the middle with doors closed

Loosen the ① back adjustable screw which is one of the two screws looking from the front while supporting the doors, tighten the ② screw clockwise, then adjust the middle gap. After adjusted, tighten the ① screw.

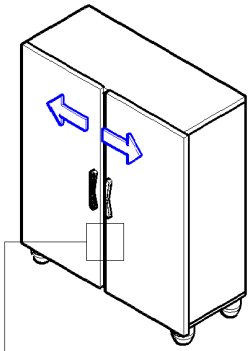

If the gap is wide

① Fixing screw

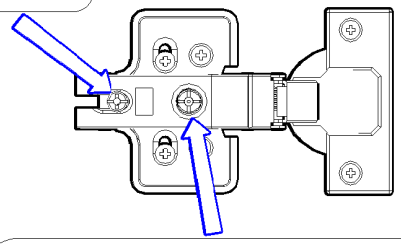

② Adjusting screw
(If you twist clockwise once, the door moves about 2mm inward)

● There is a gap on the top of the door when doors are closed
(Glass slide hinge does not require this step)
(4 screw hole hinge does not require ①)

Loosen the slide hinge screw while supporting the door, adjust the door by moving it up and down then tighten the screws.
(Please loosen the slide hinge screws of the door completely you are adjusting before moving it up and down.)

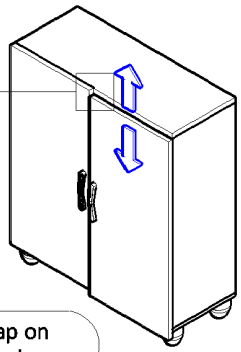

If there is a gap on the top of the door

① Open screw

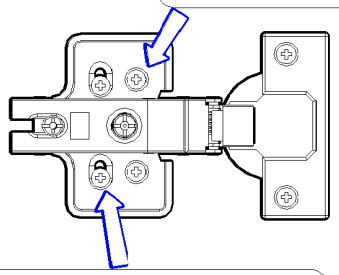

② Slide hinge screws (Please loosen these screws before adjusting)

● There is a V gap when doors are closed

Loosen the ①back adjustable screw which is one of the two screws looking from the front while supporting the doors, tighten the ② screw clockwise, then adjust the middle gap. After adjusted, tighten the ① screw.

If there is a gap between the doors on the top (Please adjust slide hinge the top part door)

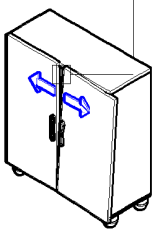

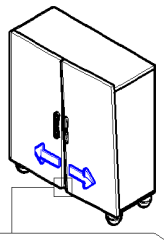

If there is a gap between the doors on the bottom (Please adjust slide hinge the bottom part door)

① Fixing screw

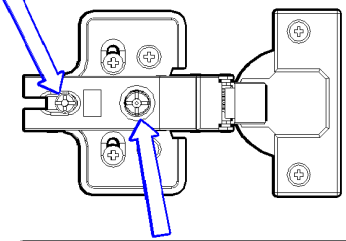

② Adjusting screw
(If you twist clockwise once, the door moves about 2mm inward)