140 MIN APPROXIMATE ASSEMBLY TIME	2 2 PERSON ASSEMBLY	Number of packages 1	REQUIRED ASSEMBLY SPACE FLOOR AREA1M x 2M 2 M^2

Maintenance skills

1.Use a clean and soft cloth to remove dust regularly; do not use solvents;
2.If you are in a humid environment for a long time, you must ventilate and exhaust moisture to avoid the furniture from being immersed in ater;
3.Keep away from high temperature sources such as stoves, radiators, etc. to prevent the furniture from deforming.

Tools needed:

Crosshead Screwdriver	Hammer

Assembly Manual

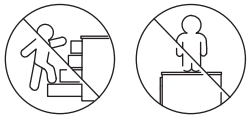

Climbing Prohibit

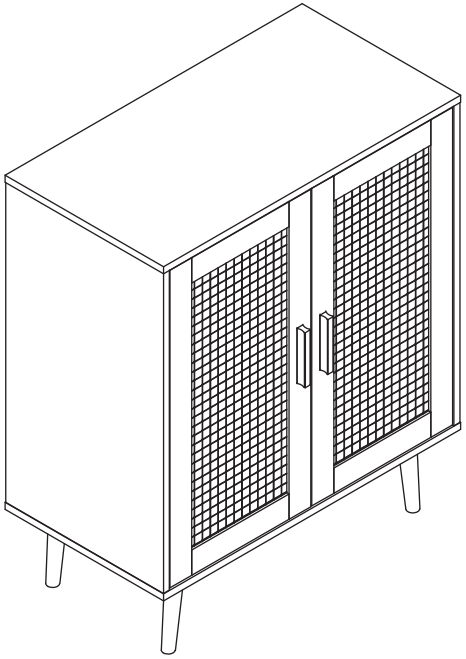

Please read this manual carefully before any operation and keep it properly for future use.

WARNING

Keep all parts out of the children's reach.

IMPORTANT: Tipping can injure young children.

NOTE

- You need to have a crosshead screwdriver and hammer beforehand.

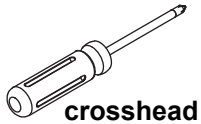

crosshead screwdriver

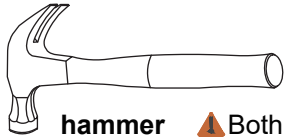

hammer ⚠Both not included in package.

- Place all the panels on a clean and smooth surface, such as a rug orcarpet, to prevent them from being scratched.
- Make sure that all parts in your product package, including panels and accessories, match up with those listed in the **Panels & Accessories list.**
- Don't tighten screws or bolts until all the pieces are fitted.
- It is recommended to have 2 persons to complete the assembly.

NOTE

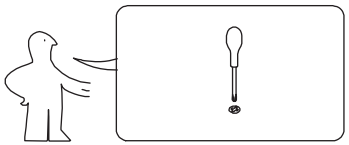

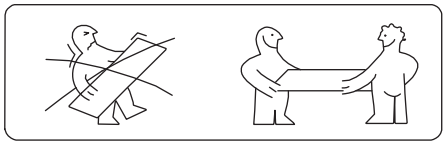

① Safe carriage,multi-people are needed.

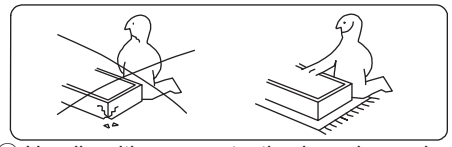

② Handle with care,protective layer is required.

Exploded View

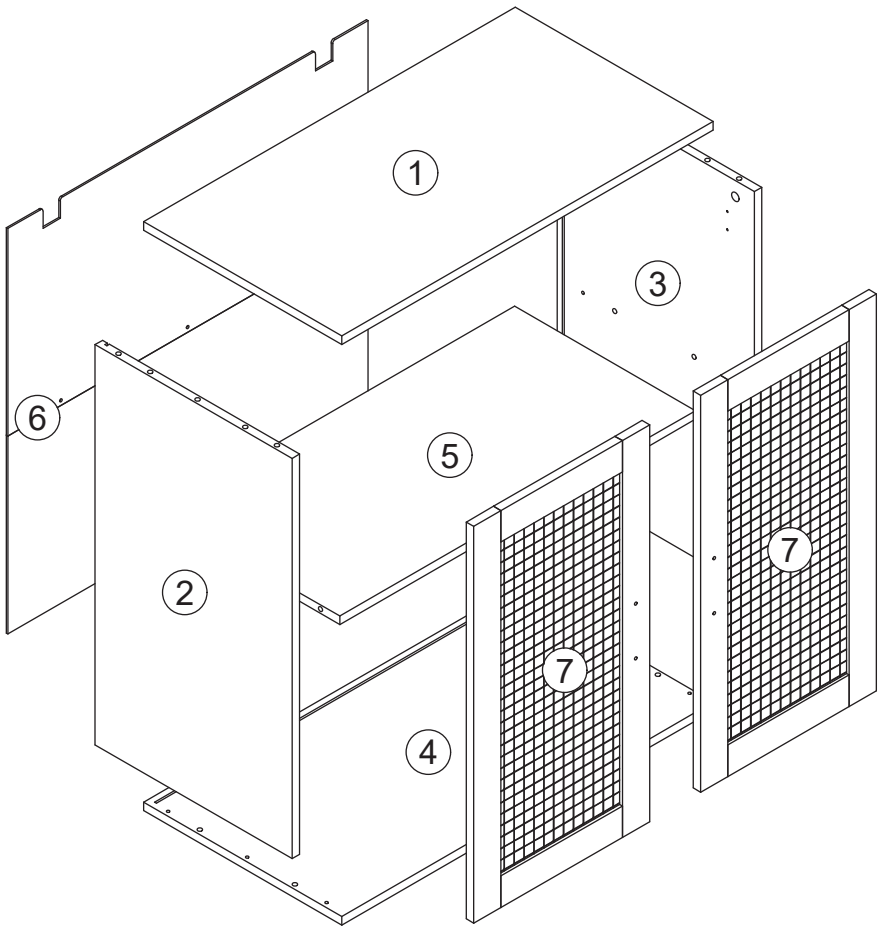

Panel List

Please check the Panel list before installation.

Item no.	Reference Image	Qty.
1		1X
2	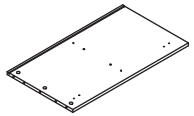	1X
3	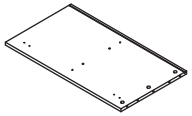	1X
4	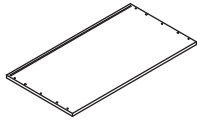	1X

Item no.	Reference Image	Qty.
5	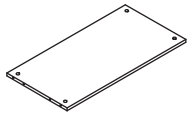	1X
6	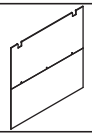	1X
7	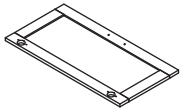	2X

Accessories List

Please check the Accessories list before installation.

Item no.	Reference Image	Qty.
A	Φ6*35 Cam Screws	10X
B	Φ15*9.5 Cam Lock Nuts	10X
C	Φ8*30 WoodDowel	12X
D	Screws	6X
E	ST3.5*14 Self-tapping screws	44X
F	Connecting iron	4X
G	160MM Wooden leg	4X

Item no.	Reference Image	Qty.
H	Back plate buckle	8X
I	Anti-inverted parts	2X
J	Screws	3X
K	Hinge	4X
L	Handle	2X
M	Anti-collision particle	2X

IMPORTANT PRECAUTIONS

Use Cam Screws 、Cam Lock Nuts、

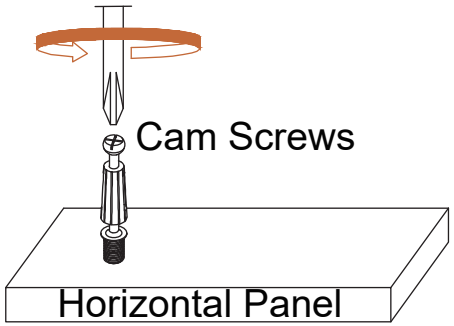

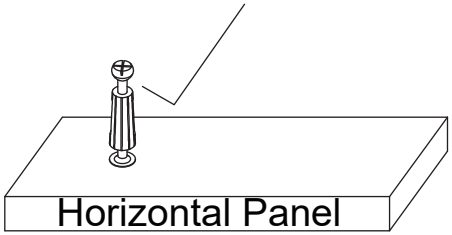

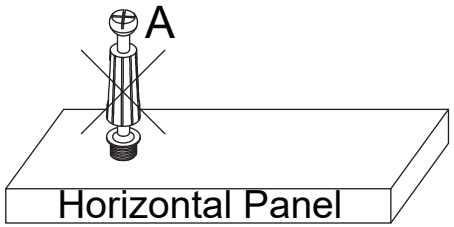

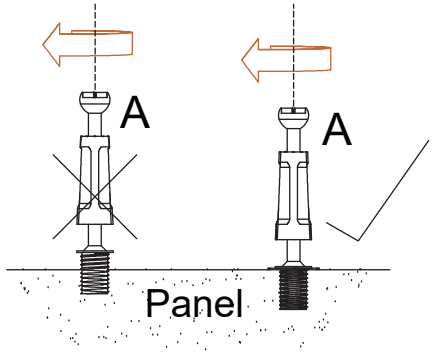

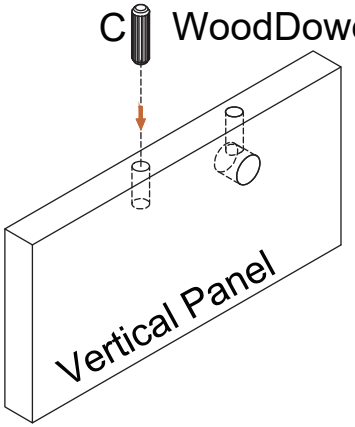

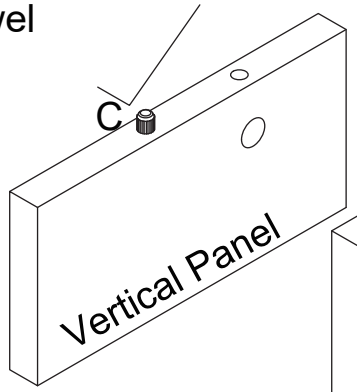

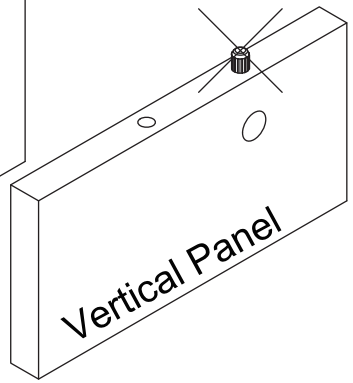

IMPORTANT PRECAUTIONS

Use Cam Screws 、Cam Lock Nuts、Dowel Kit(b)

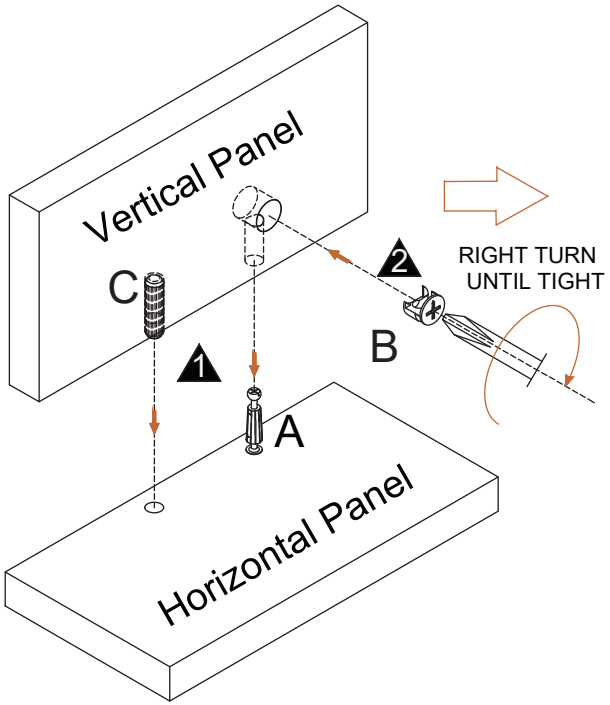

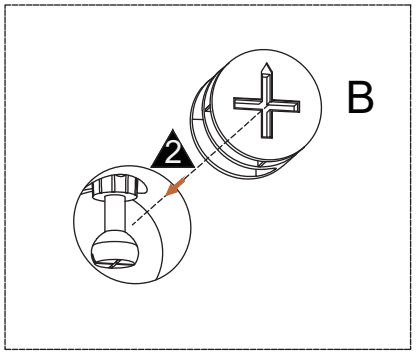

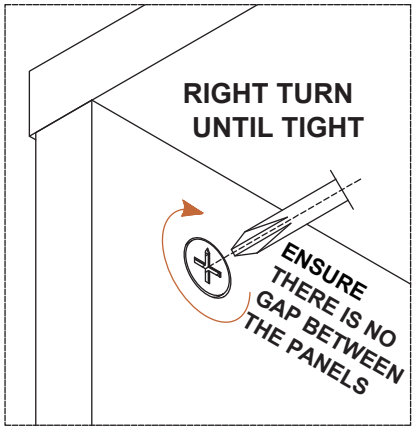

ENSURE THERE IS NO GAP BETWEEN THE PANELS

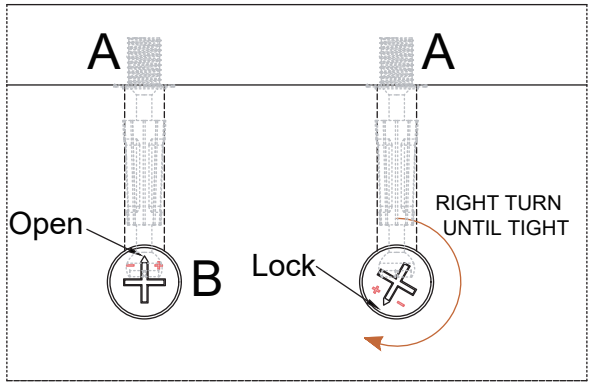

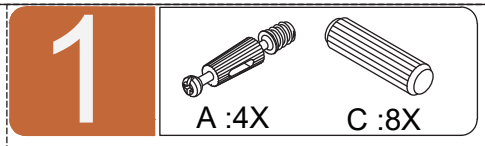

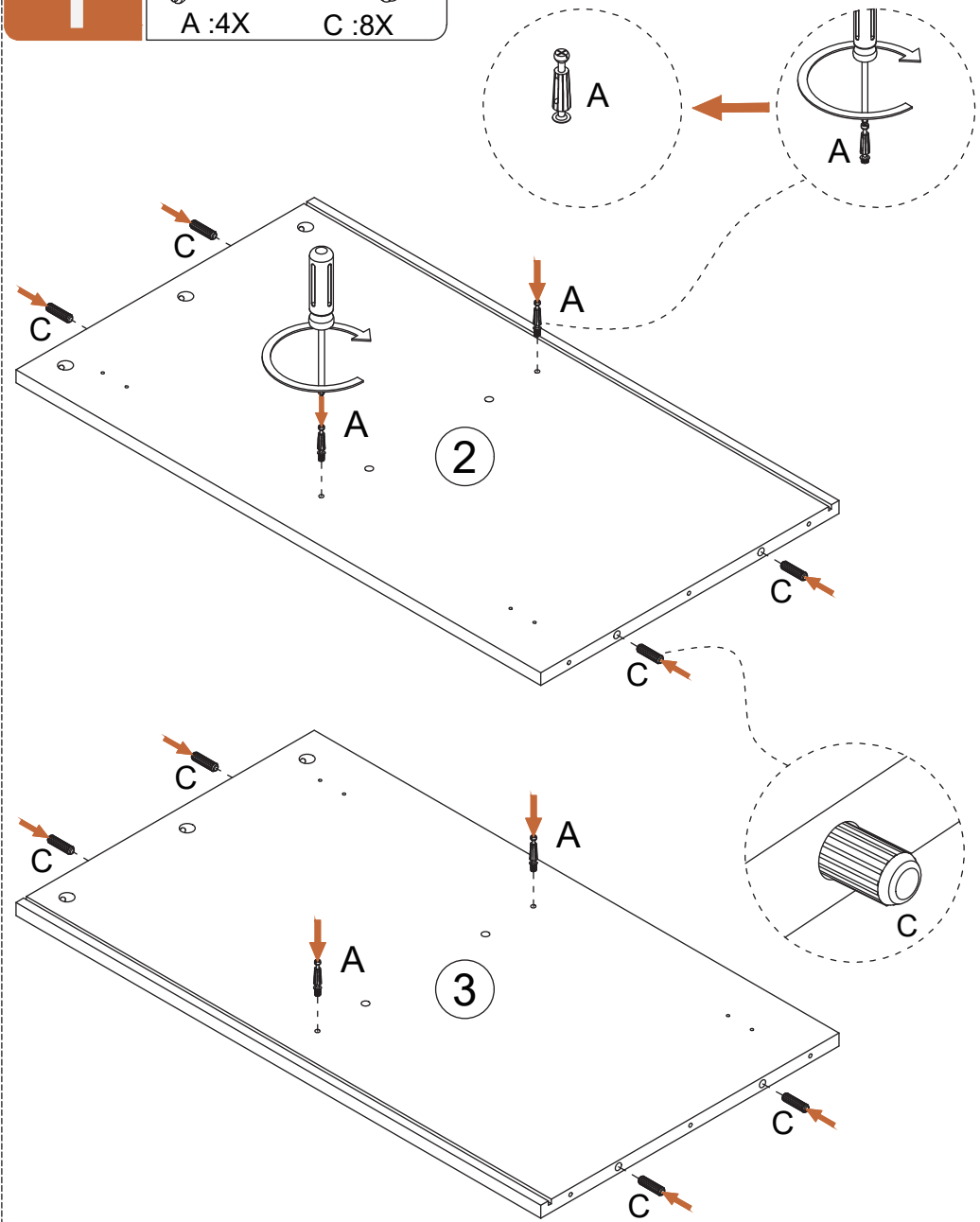

2

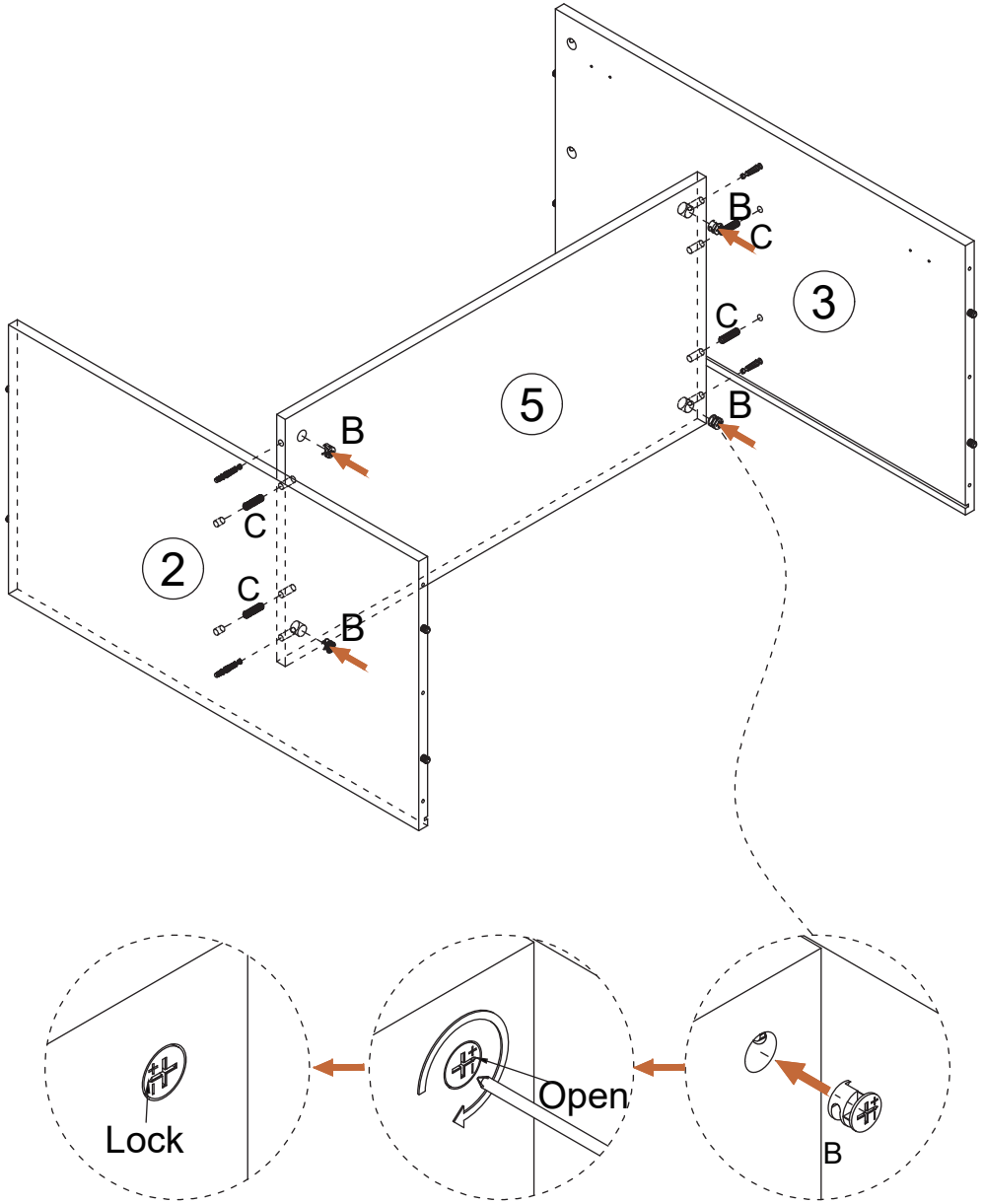

3

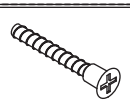

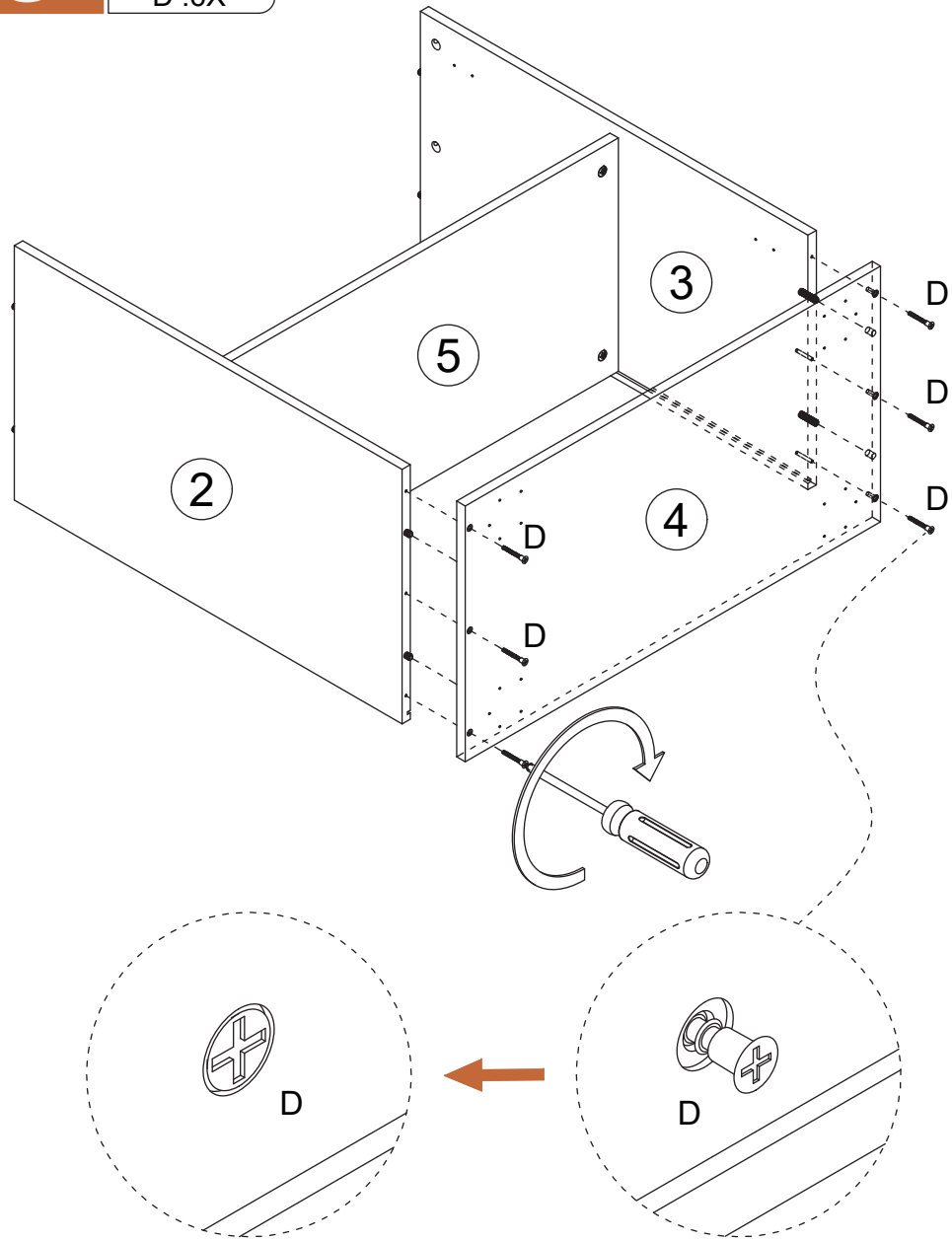

4

E :20X

F :4X

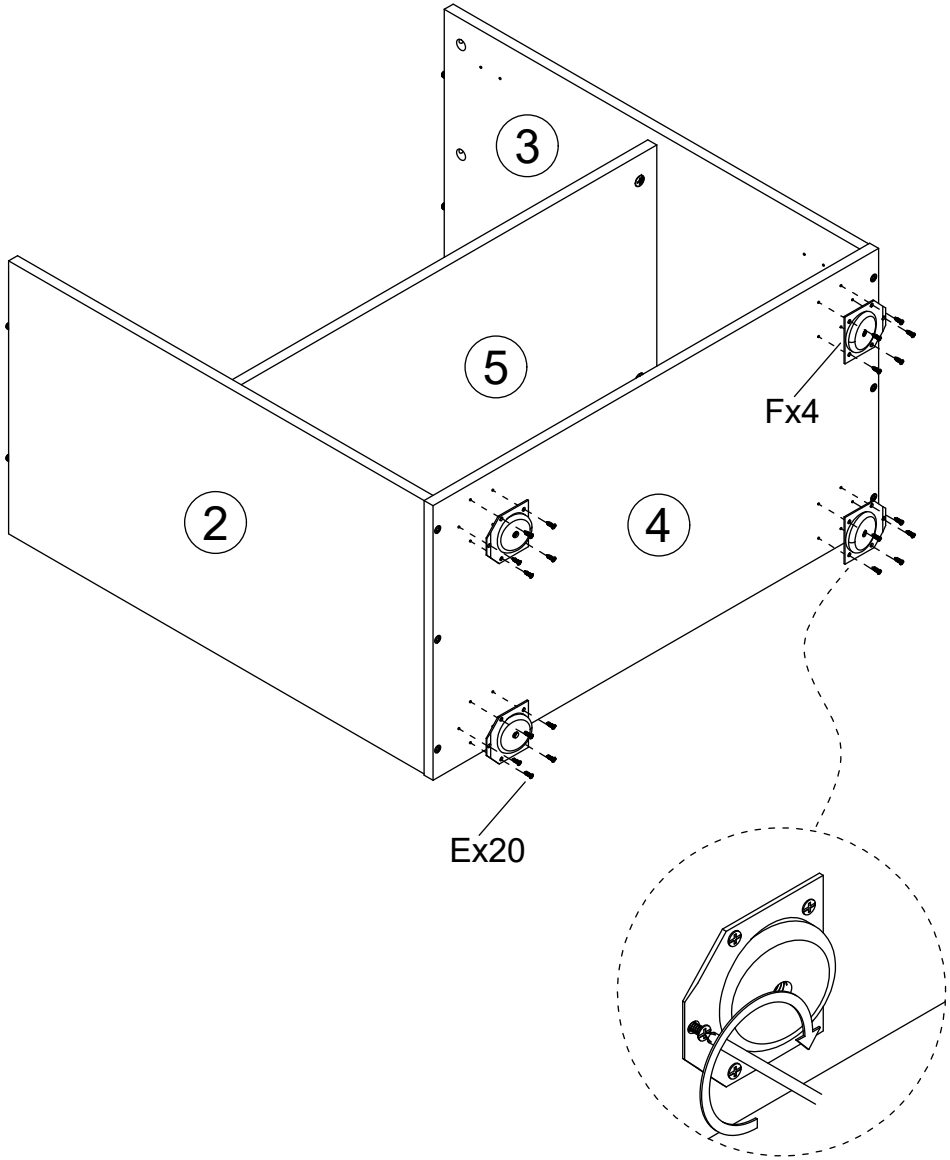

5

G :4X

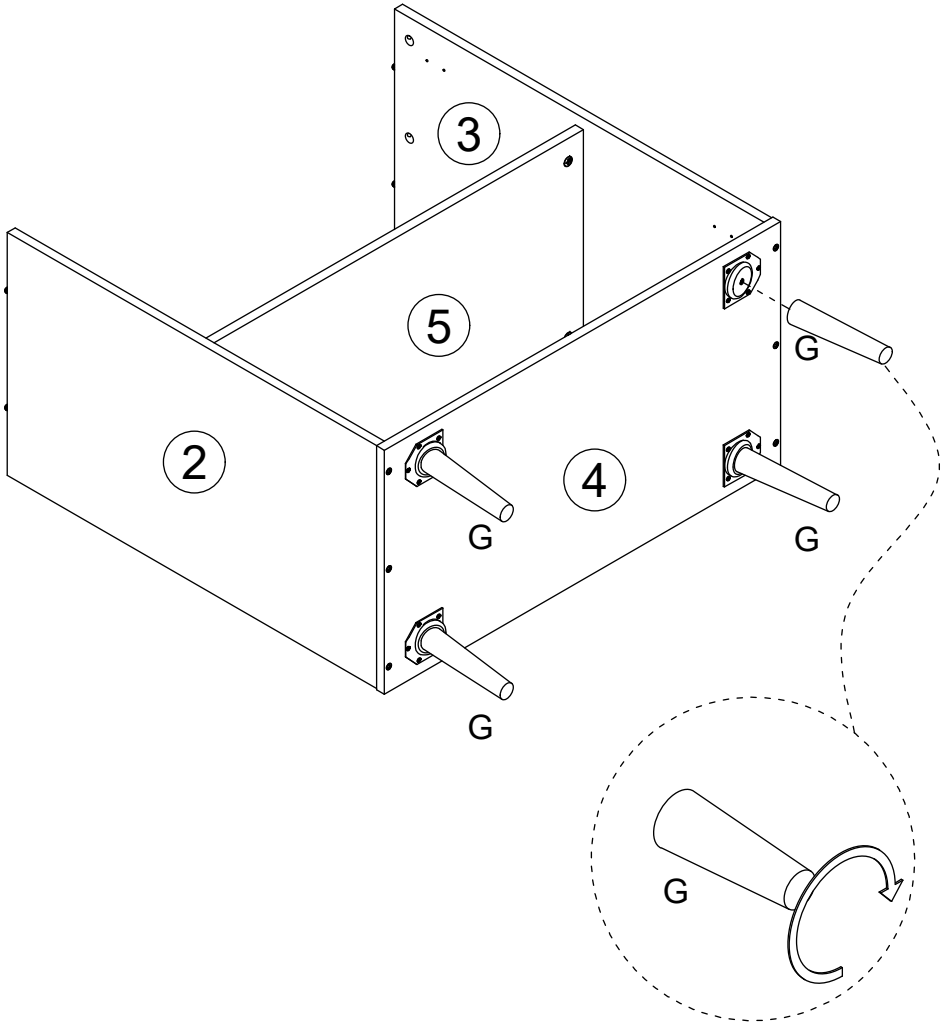

6

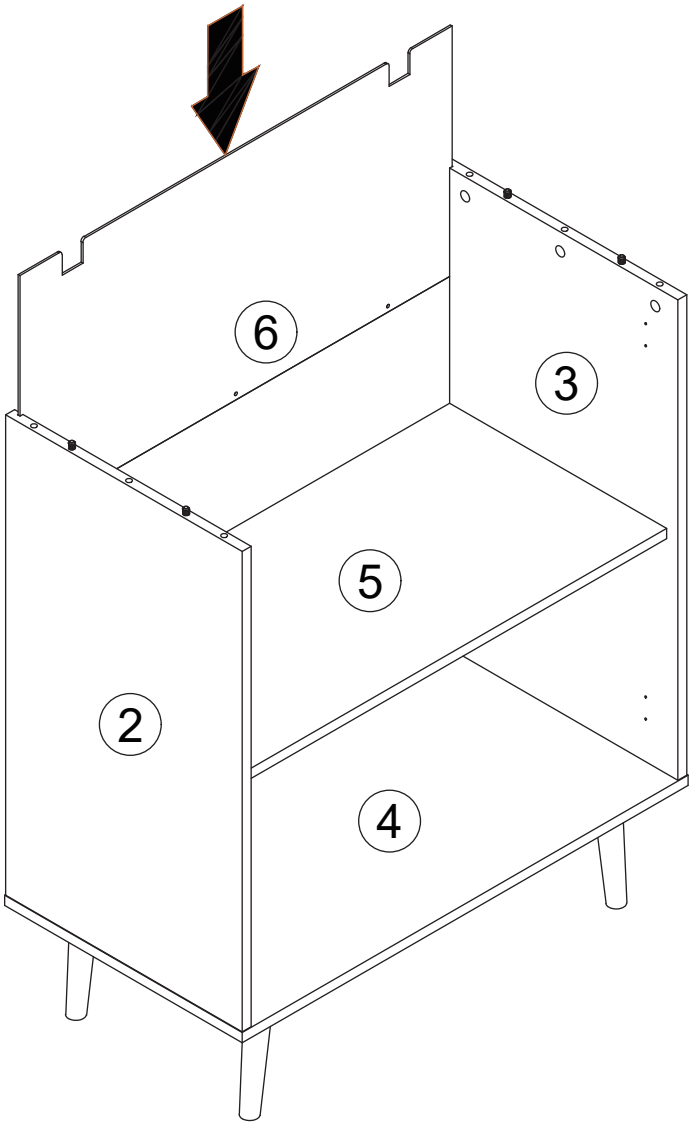

7

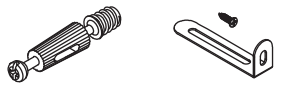

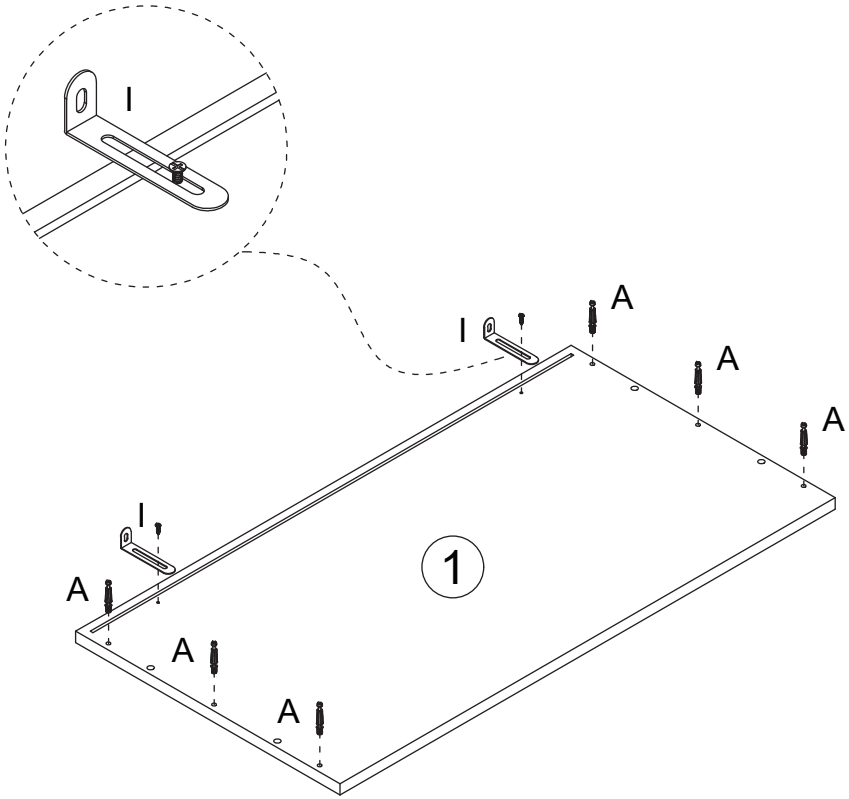

8

B :6X

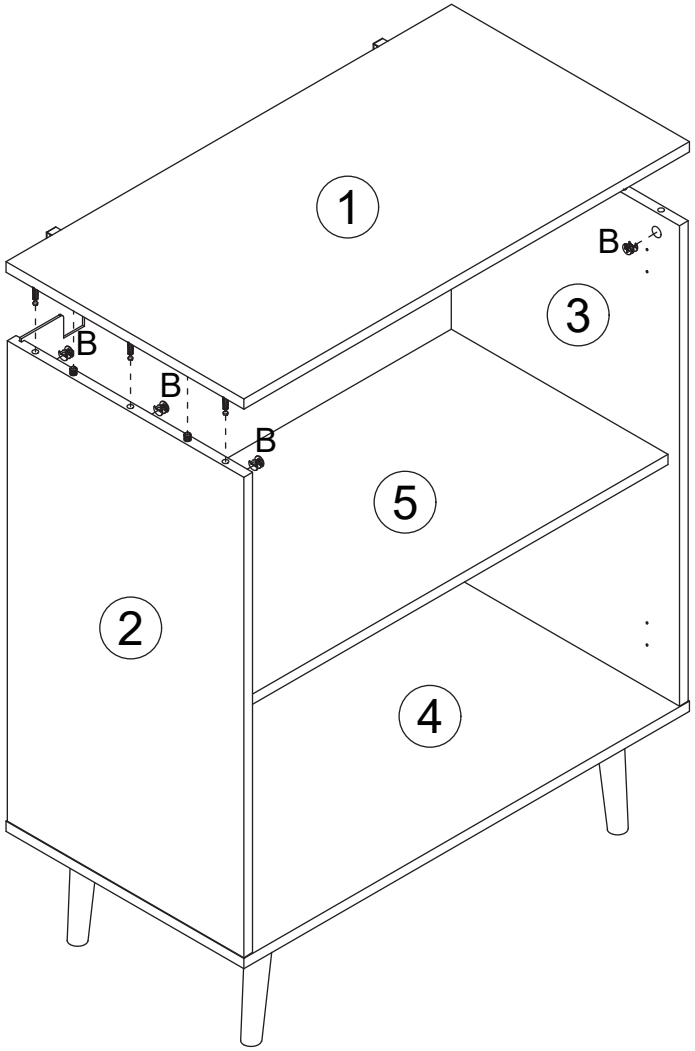

9

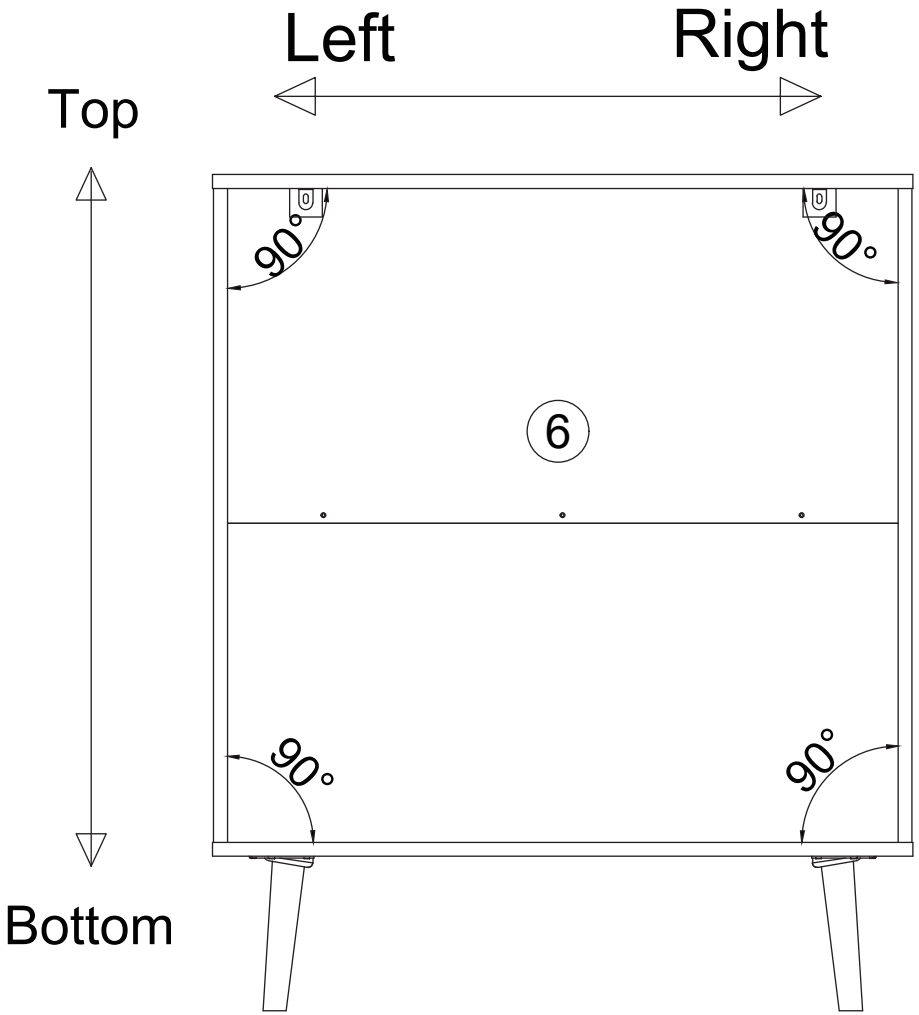

10

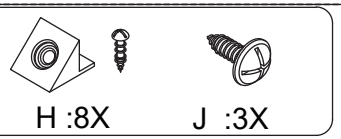

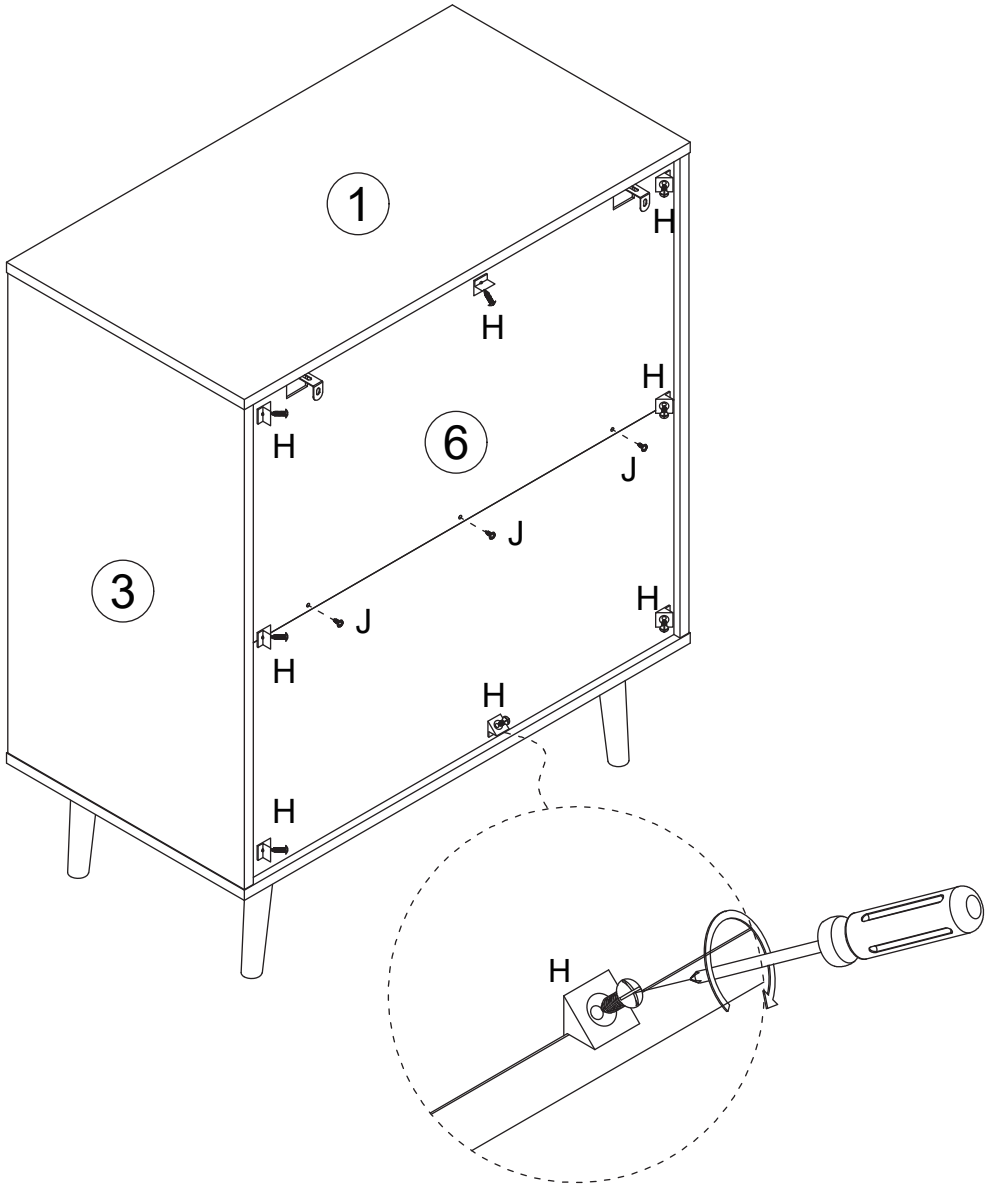

11

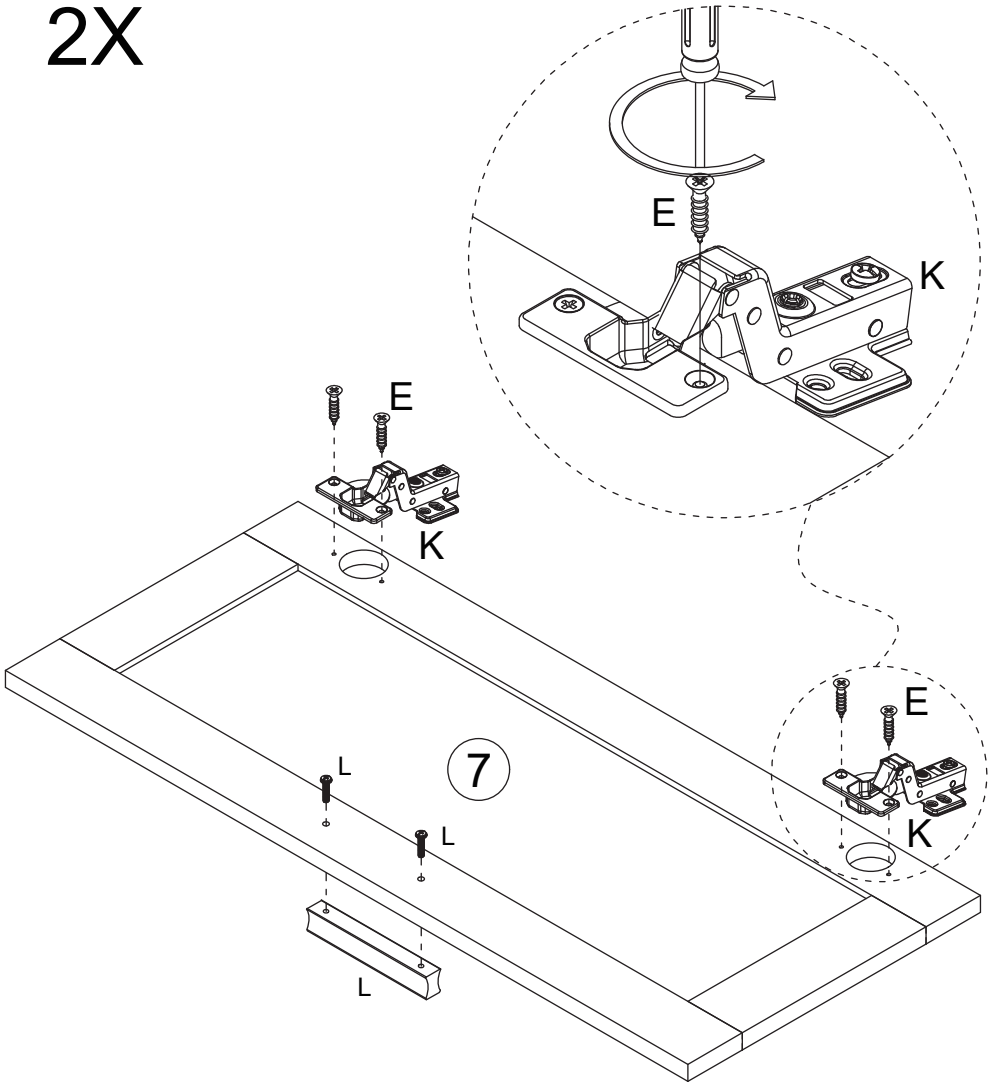

12

E :8X

M :2X

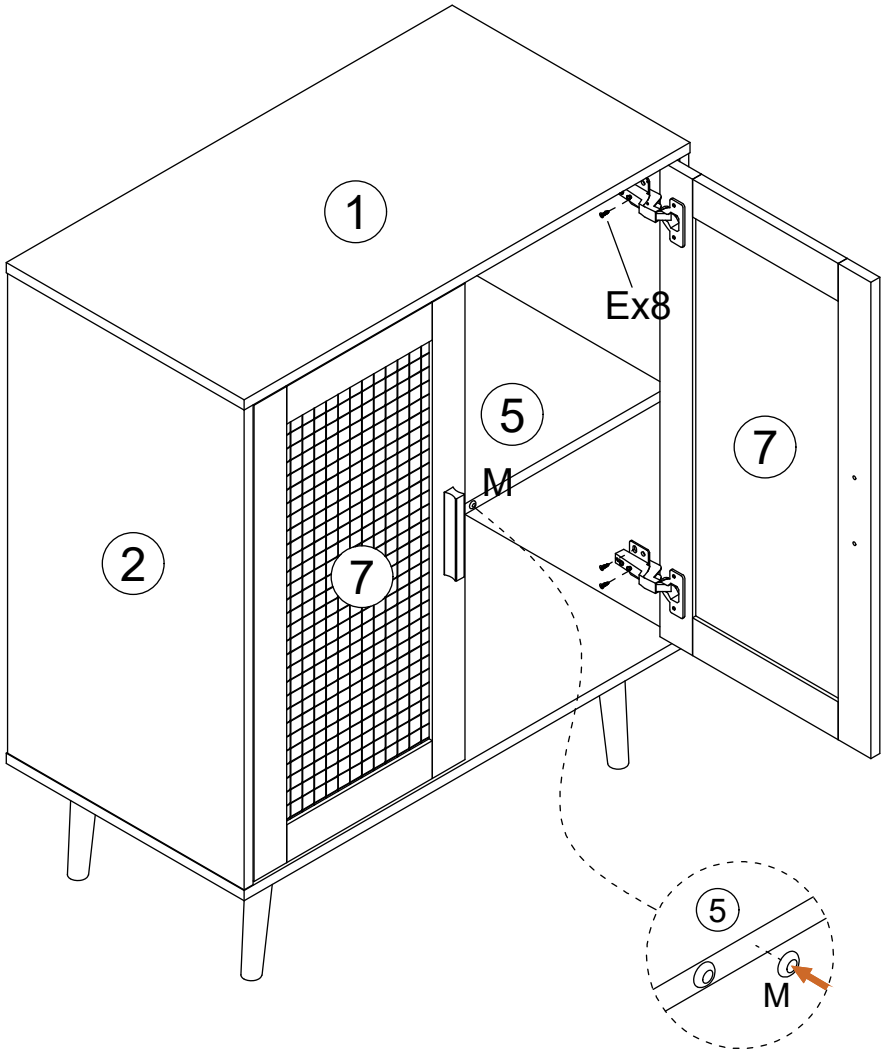

13

E :8X

IMPORTANT PRECAUTIONS

Use Accessory "K"

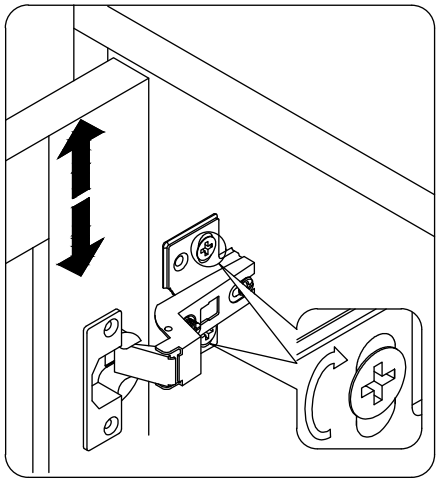

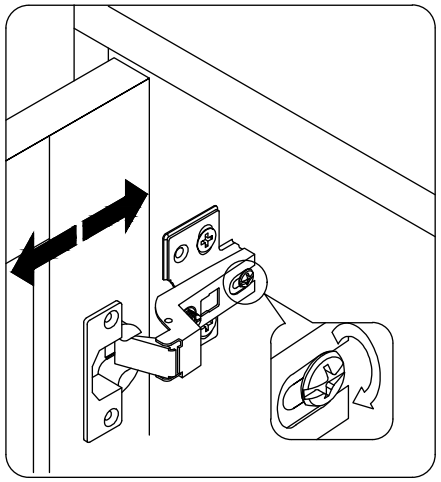

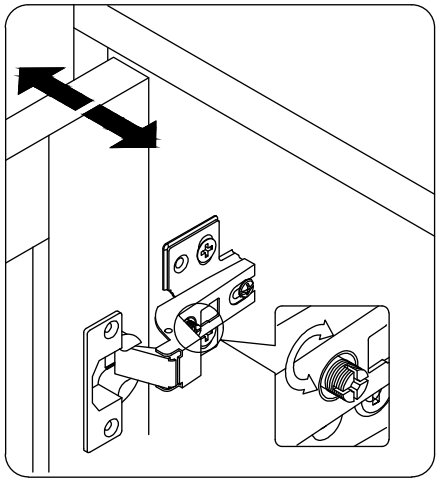

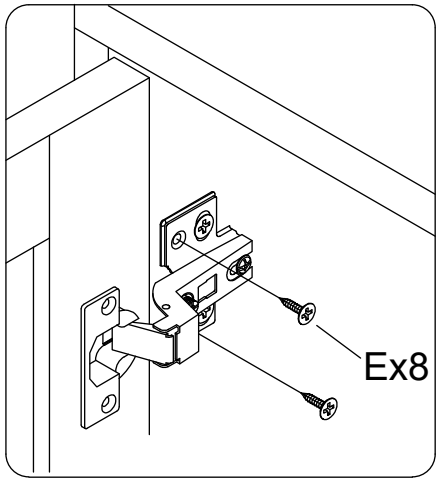

14

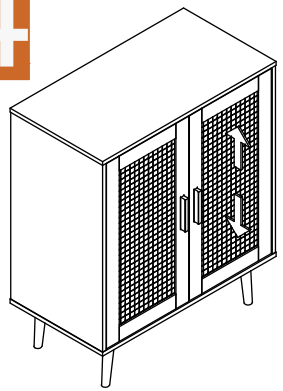

Adjust this screw to fine-tune the upper and lower positions of the door.

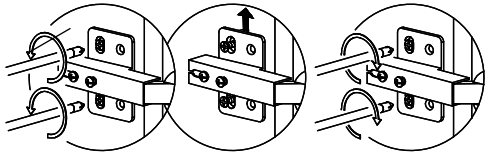

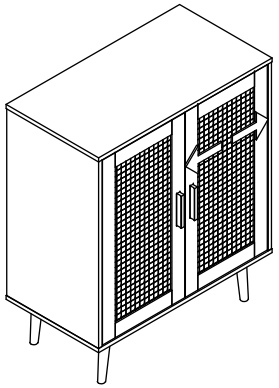

Adjust this screw to fine-tune the left and right position of the door panel.

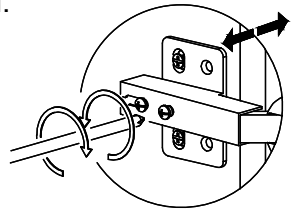

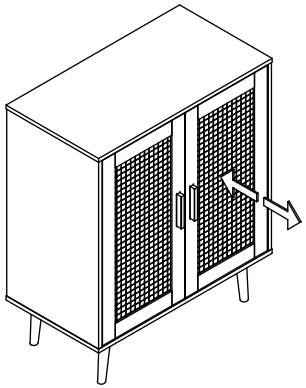

Adjust this screw to fine-tune the position under the door.

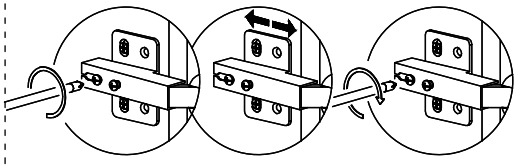

15

I :2X

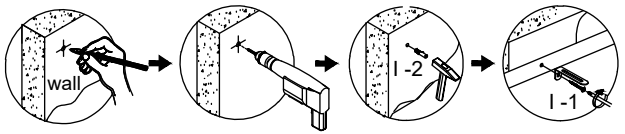

A solid wall	B cavity wall	C solid wood
Ø 8mm (5/16°)	Ø 8mm (5/16°)	Ø 3mm (Ø 1/8°)

⚠ Warning: If you overturn the furniture, it may cause serious or fatal crushing injuries. We have a wall connection device attached, please use it to hold the furniture following these instructions.
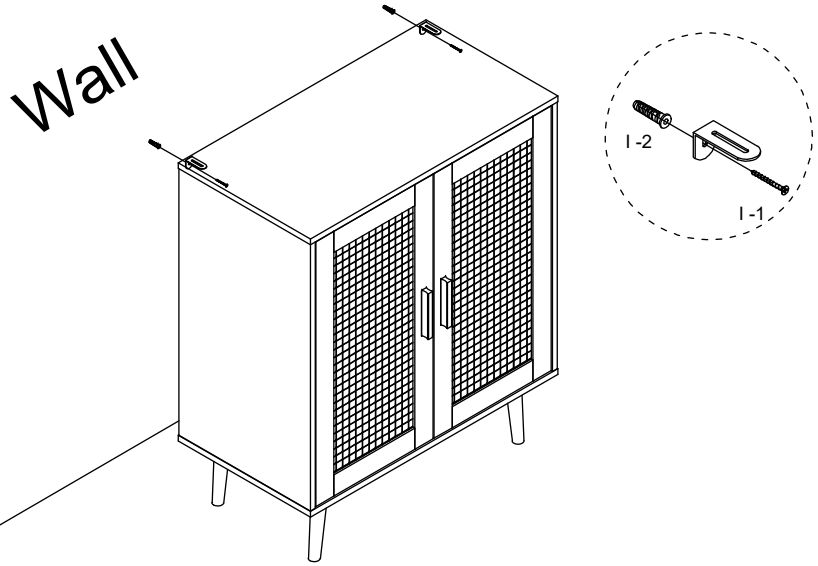
1. Mark the corresponding hole positions where you want to place the furniture;
2. Use a impact drill to drill holes and pay attention to avoid wires and water pipes;
3. Knock the expansion pipes into the wall holes;
4. Place the furniture in the corresponding position and tighten the wall connection device with screws.