# US-253053LM
# Lift Chair Instruction Manual



Thank you for choosing our product, your satisfaction is our top priority.

**Need assembly help or product support with this chair?**
Contact Us via platform, send us your message and we'll reply promptly!

**You can also contact us in the following ways, our customer service team is ready to assist you.**
Phone: 909-295-2028
Email: support@BrageLiving.com

## Important assembling suggestions

1 ) Before starting, please read our assembling instructions carefully and make yourself familiar with them.
2 ) Follow our assembling instructions carefully.
3 ) Compare the listed parts and fitting list to the contents of the cardboard.
4 ) To make sure that the furniture will not be damaged or grated during assembling, prepare an adequate area andcover the floor with the cardboards or another soft pad (i.e. cloth or carpet).
5 ) Wipe regularly with clean water and a damp, clean, soft white cloth.
6 ) Do not overwind screws. Check the screws from time to time and if necessary retight them.
7 ) Keep the instruction and service sheets. Perhaps you will need them later on.

## Parts list

A 1 X Back



B 1 X Seat



C 1 X MassageManualControlBoard



D 1 X Maualcontrolpanel



E 1 X PoowerCord



## Hardware List

F 1 X Seatpad

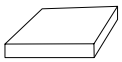

G 2 X Armpad



H 2 X Plastic cup hoder



Remove the protective dust film from the Velcro on the armrests and other areas before use.

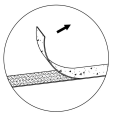

## Assembling

Step 1

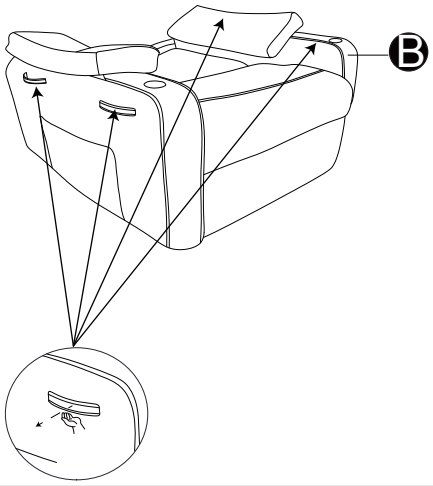


Step 2

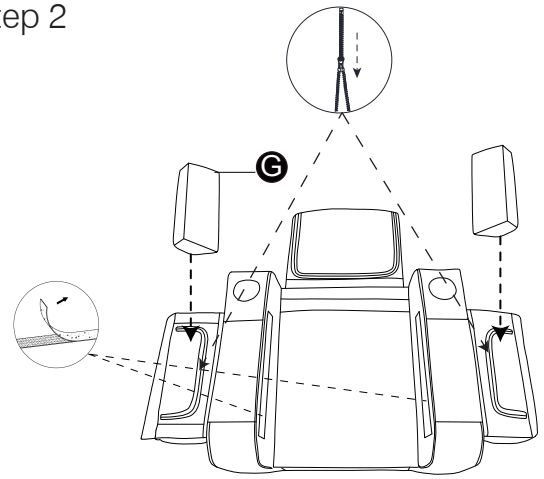


Step 3

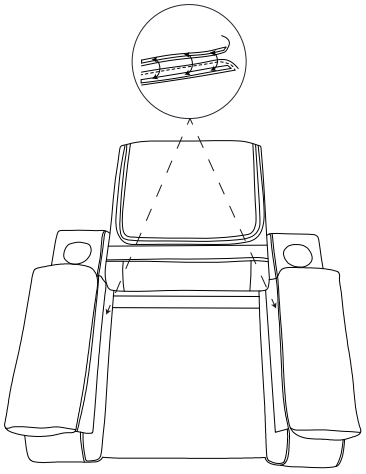

Step 4

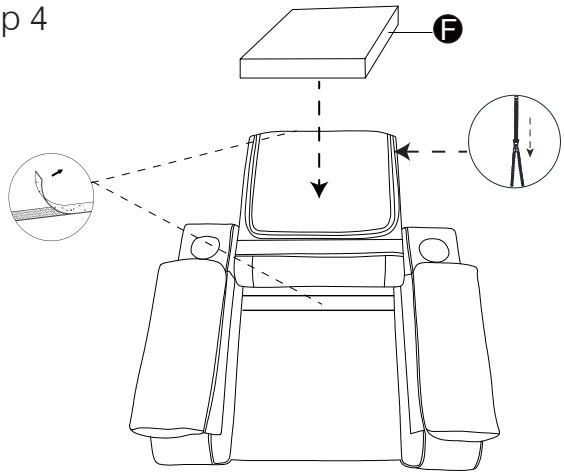

# Assembling

Step 5

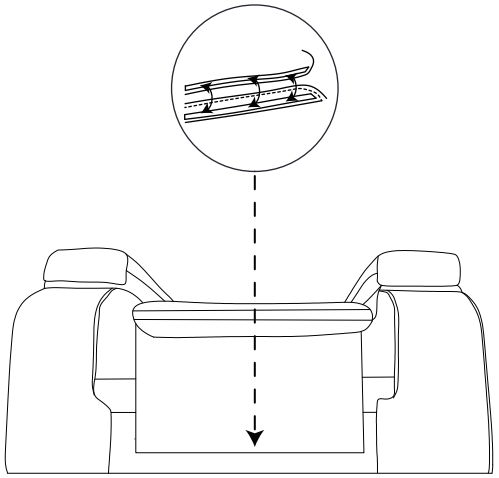

Step 6

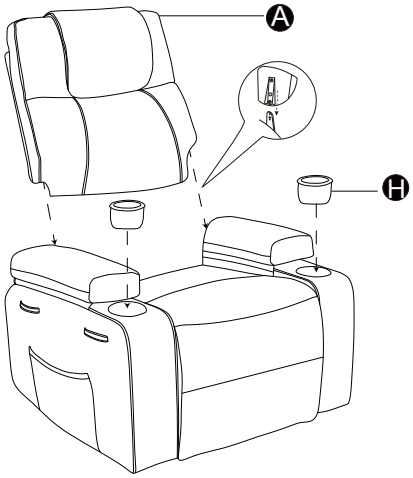


Step 7

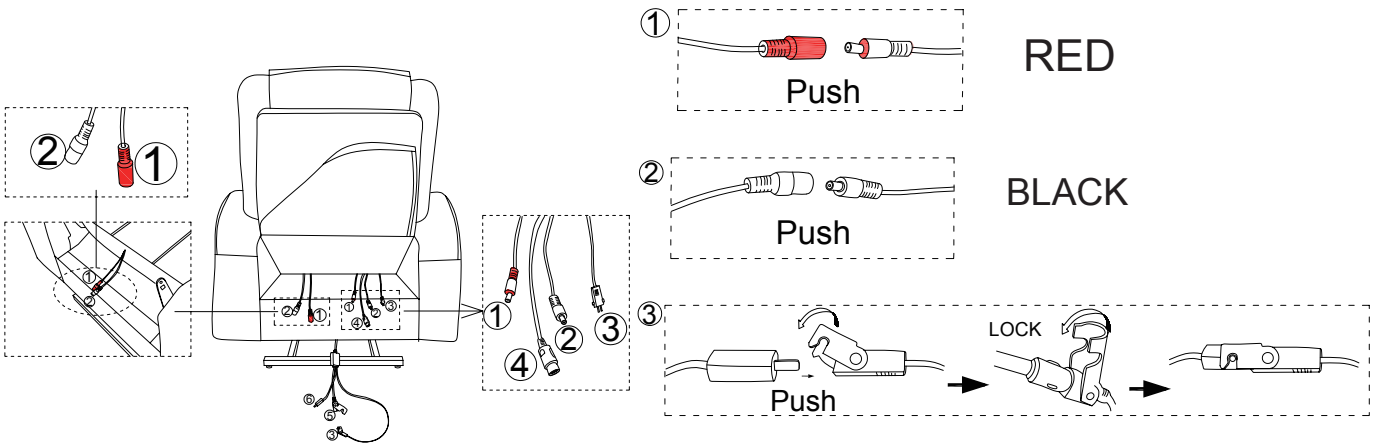


Step 8

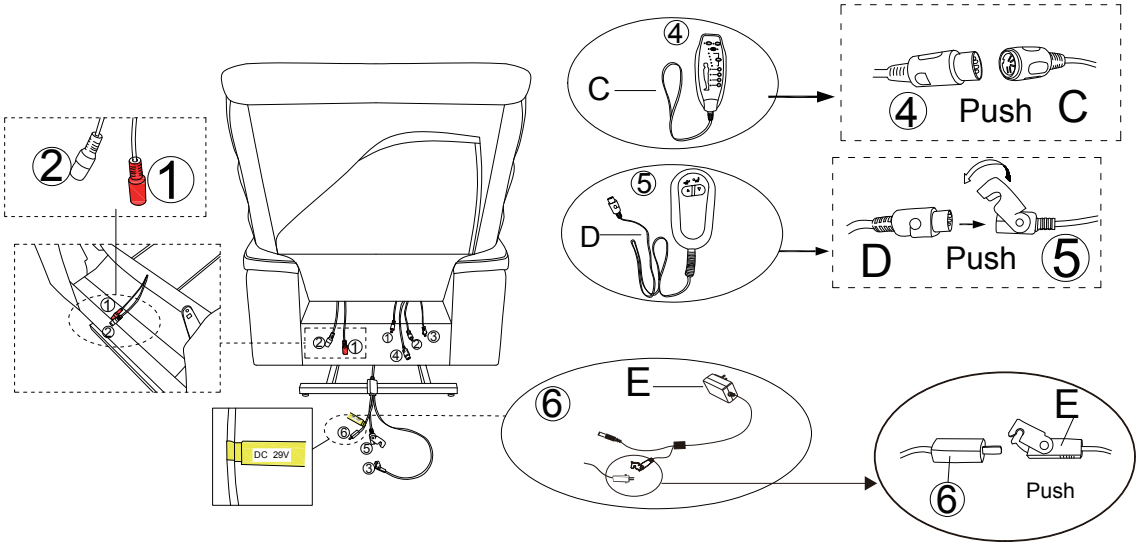

# Assembling

Step 9



Step 10



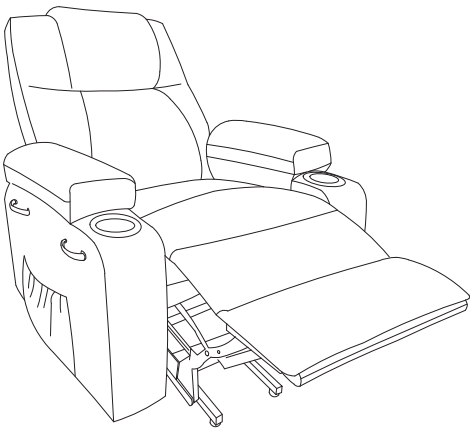

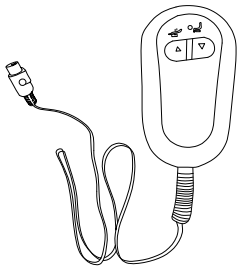

Step 11

