safety glazing
certification council

Administrative Office, AMS, Inc.
205 West Main Street, PO Box 730
Sackets Harbor, NY 13685
Phone: (315) 646-2234
E-mail: SGCC@amscert.com

ANAB
ANSI National Accreditation Board
ACCREDITED
ISO/IEC 17065
PRODUCT CERTIFICATION BODY
#0961

ACKNOWLEDGEMENT OF CERTIFICATION

THIS IS TO ACKNOWLEDGE THAT AS OF THIS DATE

Zhongshan Walle Glass Product Co., Ltd
Zhongshan, Guangdong Province

IS A CURRENT LICENSEE AND HAS MET ALL GUIDELINES AND REQUIREMENTS FOR THE SGCC® CERTIFICATION PROGRAM AND AS SUCH IS ELIGIBLE TO LABEL THE BELOW INDICATED PRODUCT(S) AS SGCC® CERTIFIED. REPRESENTATIVE SAMPLES OF THE BELOW PRODUCTS HAVE BEEN FOUND TO BE IN COMPLIANCE WITH ANSI Z97.1-2015 AS INDICATED AND CPSC 16 CFR 1201 STANDARDS, KNOWN AS COMPOSITE CERTIFICATION (COMP), OR BOTH STANDARDS WITH CAN/CGSB 12.1-2022 KNOWN AS COMP+CAN.

Tempered Transparent Glass

SGCC#	IN	MM	Attributes	Type Code	Max Size	ANSI Class	Test Std
8142	1/4	6		TTG	U	A	COMP+CAN
8143	5/16	8		TTG	U	A	COMP+CAN
8144	3/8	10		TTG	U	A	COMP+CAN

THIS SGCC® PROGRAM CERTIFICATION IS CURRENT AND IN FULL EFFECT AS OF THIS ISSUE DATE. CERTIFICATION IN THE SGCC® PROGRAM IS SUBJECT TO SEMI-ANNUAL RENEWAL. PLEASE CHECK THE SGCC WEBSITE AT WWW.SGCC.ORG OR THIS OFFICE FOR MOST CURRENT INFORMATION.

Wednesday, July 29, 2026	L26	
DATE OF ISSUE	CERTIFICATION PERIOD	ADMINISTRATIVE MANAGER

SHENZHEN CAILAONIAO SANITARY WARE AND HARDWARE CO., LTD.
T01, ROOM 1403, WEST BUILDING, TIANAN INNOVATION TECHNOLOGY PLAZA (PHASE II), NO. 2 TAIRAN 10TH ROAD, TIANAN COMMUNITY, SHATOU SUB-DISTRICT, FUTIAN DISTRICT, SHENZHEN CITY

Sample Description	:	Shower Door
Model No.	:	S9811-S0102
Country of Origin	:	CHINA
Country of Destination	:	UNITED STATES
Manufacturer	:	SHENZHEN CAILAONIAO SANITARY WARE AND HARDWARE CO.,LTD.

As above test item and its relevant information regarding to the submission are provided and confirmed by the applicant. SGS is not liable to either the test item or its relevant information, in terms of the accuracy, suitability, reliability or/and integrity accordingly.

****

Sample Receiving Date	:	Apr 29, 2025
Test Performing Date	:	May 07, 2025 to May 19, 2025
Test Performed	:	Selected test(s) as requested by applicant
Test Result(s)	:	For further details, please refer to the following page(s)

Test Requested	Rating
IAPMO IGC 154-2019	Pass

Signed for and on behalf of
SGS-CSTC Standards Technical Services Co., Ltd. Guangzhou Branch

Bink Xu

Bink Xu
Authorized Signatory

Scan to see the report
GZHL250501711101PL
Verification:
check.sgsonline.com.cn

Unless otherwise agreed in writing, this document is issued by the Company subject to its General Conditions of Service printed overleaf, available on request or accessible at https://www.sgs.com/en/Terms-and-Conditions. Attention is drawn to the limitation of liability, indemnification and jurisdiction issues defined therein. Any holder of this document is advised that information contained hereon reflects the Company's findings at the time of its intervention only and within the limits of Client's instructions, if any. The Company's sole responsibility is to its Client and this document does not exonerate parties to a transaction from exercising all their rights and obligations under the transaction documents. This document cannot be reproduced except in full, without prior written approval of the Company. Any unauthorized alteration, forgery or falsification of the content or appearance of this document is unlawful and offenders may be prosecuted to the fullest extent of the law. Unless otherwise stated the results shown in this test report refer only to the sample(s) tested and such sample(s) are retained for 30 days only.
Attention: To check the authenticity of testing /inspection report & certificate, please contact us at telephone: (86-755) 8307 1443, or email: CN.Doccheck@sgs.com

No.198, Kezhu Road, Science City, Economic & Technological Development Area, Guangzhou, Guangdong, China 510663 t (86-20) 82155555 www.sgsgroup.com.cn
中国·广东·广州高新技术产业开发区科学城科珠路198号 邮编: 510663 t (86-20) 82155555 sgs.china@sgs.com

Test Conducted: Based on IAPMO IGC 154-2019 Shower and Tub/Shower Enclosures, Bathtubs with Glass Pressure-Sealed Doors, and Shower/Steam Panels

Test Results: Details shown as following table

IAPMO IGC 154			
Clause	**Test Item**	**Result**	**Rating**
4	General Requirement		
4.1	Enclosures and Shower/Steam Panels		
4.1.1	General Shower/Steam panels, enclosures, and factory‐supplied components (e.g., plumbing supply fittings, plumbing waste fittings, connectors, piping, bathtubs, and shower pans) shall comply with the applicable requirements of this Standard.	Complied	Pass
4.1.2	Plastic Enclosures and Plastic Shower Panels Plastic enclosures and plastic shower panels shall comply with the applicable requirements of CSA B45.5/IAPMO Z124, except that portable shower panels shall not need to comply with the ignitability and cigarette tests specified in Clauses 5.13 and 5.14 of CSA B45.5/IAPMO Z124.		N/A
4.1.3	Stainless Steel Shower/Steam Panels Stainless steel shower/steam panels shall a) comply with the applicable requirements of ASME A112.19.3/CSA B45.4; and b) have a minimum wall thickness of 1.17mm (0.046in).		N/A
4.1.4	Aluminum Shower/Steam Panels Aluminum shower/steam panels shall (a) have a minimum wall thickness of 2.16 mm (0.085 in); and (b) be anodized; and (c) not show any signs of corrosion, blistering, or discoloration when tested in accordance with Annex A1 of ASTM G85 for 24 h.		N/A
4.1.5	Wood Shower Panels Wood shower panels shall comply with the following tests specified in CSA B45.5/IAPMO Z124: (a) Clause 5.10, colourfastness test; (b) Clause 5.11, stain resistance test; (c) Clause 5.12, cleanability and wear test; (d) Clause 5.15, chemical resistance test; and (e) Clause 5.25.4, water absorption test.		N/A

Unless otherwise agreed in writing, this document is issued by the Company subject to its General Conditions of Service printed overleaf, available on request or accessible at https://www.sgs.com/en/Terms-and-Conditions. Attention is drawn to the limitation of liability, indemnification and jurisdiction issues defined therein. Any holder of this document is advised that information contained hereon reflects the Company's findings at the time of its intervention only and within the limits of Client's instructions, if any. The Company's sole responsibility is to its Client and this document does not exonerate parties to a transaction from exercising all their rights and obligations under the transaction documents. This document cannot be reproduced except in full, without prior written approval of the Company. Any unauthorized alteration, forgery or falsification of the content or appearance of this document is unlawful and offenders may be prosecuted to the fullest extent of the law. Unless otherwise stated the results shown in this test report refer only to the sample(s) tested and such sample(s) are retained for 30 days only.
Attention: To check the authenticity of testing /inspection report & certificate, please contact us at telephone: (86-755) 8307 1443, or email: CN.Doccheck@sgs.com
No.198, Kezhu Road, Science City, Economic & Technological Development Area, Guangzhou, Guangdong, China 510663 t (86-20) 82155555 www.sgsgroup.com.cn
中国·广东·广州高新技术产业开发区科学城科珠路198号 邮编: 510663 t (86-20) 82155555 sgs.china@sgs.com
Member of the SGS Group (SGS SA)

IAPMO IGC 154			
Clause	**Test Item**	**Result**	**Rating**
4.1.6	Coatings Coatings, other than porcelain-enameled steel or cast iron, shall comply with the coating requirements specified in Clause 5.2 of ASME A112.18.1/CSA B125.1.	Refer to the test result of clause 5.2 of ASME A112.18.1/CSA B125.1	Pass
4.1.7	Portable Shower/Steam Panels Portable shower/steam panels shall be designed to connect to the water supply without additional structural support.		N/A
4.1.8	Shower/Steam Panel Backsplash Enclosure Galvanized sheet metal backsplash panel support enclosures shall comply with ASTM A653.		N/A
4.1.9	Steam Components (a) Steam nozzles shall be made of stainless steel material compliant to ASTM A276. (b) Steam diversion plates shall be made of stainless steel material compliant to ASTM A240. (c) Generated steam temperature shall not exceed 58 ± 2 ºC (137 ± 3ºF) at the discharge interface of the panel.		N/A
4.2	Plumbing Components		
4.2.1.1	Supply Fittings Control valves, diverter valves, shower heads, body sprays, and hand - held showers shall comply with the applicable requirements of ASME A112.18.1/CSA B125.1.		N/A
4.2.1.2	Automatic compensating valves shall comply with ASME A112.18.1/CSA B125.1 or ASSE 1016/ASME A112.1016/CSA B125.16.		N/A
4.2.1.3	Ball valves shall comply with IAPMO/ANSI Z1157.		N/A
4.2.2	Connections Connections shall comply with Clause 4.4 or 4.5 of ASME A112.18.1/CSA B125.1.		N/A
4.2.3	Flexible Connectors Flexible connectors shall comply with ASME A112.18.6/CSA B125.6.		N/A
4.2.4	Plastic Piping Systems (a) PEX piping systems shall comply with ASTM F877. (b) ABS DWV pipe and fittings shall comply with ASTM D2661. (c) CPVC pipe shall comply with ASTM D2846 or CSA B137.6.		N/A
4.2.5	Copper Tubes Copper water tubes shall comply with ASTM B88.		N/A

Unless otherwise agreed in writing, this document is issued by the Company subject to its General Conditions of Service printed overleaf, available on request or accessible at https://www.sgs.com/en/Terms-and-Conditions. Attention is drawn to the limitation of liability, indemnification and jurisdiction issues defined therein. Any holder of this document is advised that information contained hereon reflects the Company's findings at the time of its intervention only and within the limits of Client's instructions, if any. The Company's sole responsibility is to its Client and this document does not exonerate parties to a transaction from exercising all their rights and obligations under the transaction documents. This document cannot be reproduced except in full, without prior written approval of the Company. Any unauthorized alteration, forgery or falsification of the content or appearance of this document is unlawful and offenders may be prosecuted to the fullest extent of the law. Unless otherwise stated the results shown in this test report refer only to the sample(s) tested and such sample(s) are retained for 30 days only.
Attention: To check the authenticity of testing /inspection report & certificate, please contact us at telephone: (86-755) 8307 1443, or email: CN.Doccheck@sgs.com
No.198, Kezhu Road, Science City, Economic & Technological Development Area, Guangzhou, Guangdong, China 510663 t (86-20) 82155555 www.sgsgroup.com.cn
中国·广东·广州高新技术产业开发区科学城科珠路198号 邮编: 510663 t (86-20) 82155555 sgs.china@sgs.com
Member of the SGS Group (SGS SA)

IAPMO IGC 154			
Clause	**Test Item**	**Result**	**Rating**
4.2.6	Copper Fittings Copper fittings shall comply with ASME B16.22.		N/A
4.2.7	Flexible Thermoplastic Polyurethane (TPU) Spiral Tubing		
4.2.7.1	Flexible TPU spiral tubing shall (a) be made of materials complying with classification 0253 as specified in ASTM D5476; and (b) comply with Section 5.4 of this Standard.		N/A
4.2.7.2	When using TPU spiral tubing with push‐fit fittings, an internal support shall be inserted into the end of the tubing prior to it being assembled.		N/A
4.2.8	Push‐Fit Fittings Push‐fit fittings shall comply with ASSE 1061.		N/A
4.2.9	Waste Fittings and Trench Drains		
4.2.9.1	Except when proprietary (i.e., non‐standard) waste fittings are provided by the manufacturer, the dimensions of waste outlets shall comply with CSA B45.5/IAPMO Z124.		N/A
4.2.9.2	Factory‐supplied waste fittings shall comply with ASME A112.18.2/CSA B125.2.		N/A
4.2.9.3	Trench drains shall comply with ASME A112.6.3.		N/A
4.3	Electrical Requirements Shower/steam panels and enclosures incorporating electrical components or features shall comply with the applicable CSA or UL standards (e.g., CSA C22.2 No. 14, CSA C22.2 No. 68, CSA C22.2 No. 60335-1, UL 508, UL 1951, or UL60335-1) except when powered by a: (a) direct plug-in Class 2 transformer that complies with the applicable CSA or UL standards (e.g., CSA C22.2 No. 223 or UL 1310); (b) low‐voltage circuit (i.e., a circuit involving a peak open‐circuit potential of not more than 42.2 V supplied by a battery or by a Class 2 power supply); or (c) battery		N/A
4.4	Glass Components		
4.4.1	Glass inserts, glass doors, glass side or return panels, and other glass components shall comply with the requirements for Category II applications specified in (a) CFR Title 16, Chapter II, Part 1201, for products intended for the United States; and (b) CAN/CGSB‐12.1, for products intended for Canada.	The certification issued by SGCC was provided. Transparent flat glass Thickness: 8mm SGCC# 9697	Pass

Unless otherwise agreed in writing, this document is issued by the Company subject to its General Conditions of Service printed overleaf, available on request or accessible at https://www.sgs.com/en/Terms-and-Conditions. Attention is drawn to the limitation of liability, indemnification and jurisdiction issues defined therein. Any holder of this document is advised that information contained hereon reflects the Company's findings at the time of its intervention only and within the limits of Client's instructions, if any. The Company's sole responsibility is to its Client and this document does not exonerate parties to a transaction from exercising all their rights and obligations under the transaction documents. This document cannot be reproduced except in full, without prior written approval of the Company. Any unauthorized alteration, forgery or falsification of the content or appearance of this document is unlawful and offenders may be prosecuted to the fullest extent of the law. Unless otherwise stated the results shown in this test report refer only to the sample(s) tested and such sample(s) are retained for 30 days only.
Attention: To check the authenticity of testing /inspection report & certificate, please contact us at telephone: (86-755) 8307 1443, or email: CN.Doccheck@sgs.com
No.198, Kezhu Road, Science City, Economic & Technological Development Area, Guangzhou, Guangdong, China 510663 t (86-20) 82155555 www.sgsgroup.com.cn
中国·广东·广州高新技术产业开发区科学城科珠路198号 邮编: 510663 t (86-20) 82155555 sgs.china@sgs.com
Member of the SGS Group (SGS SA)

IAPMO IGC 154			
Clause	**Test Item**	**Result**	**Rating**
4.4.2	The joints between glass inserts and enclosures or shower/steam panels shall be watertight.		N/A
4.5	Bathtubs and Shower Receptors		
4.5.1	Hydromassage Bathtubs When supplied as part of an enclosure or shower panel, hydromassage bathtubs shall comply with ASME A112.19.7/CSA B45.10.		N/A
4.5.2	Shower Receptors When supplied as part of an enclosure or shower panel, shower receptors shall comply with CSA B45.5/IAPMO Z124 or IAPMO PS 106, as applicable.		N/A
4.5.3	Bathtubs and Tub/Shower Combinations with Glass Pressure - Sealed Doors Bathtubs and tub/shower combinations with glass pressure - sealed doors shall comply with the (a) requirements for glass components of this Standard; and (b) applicable requirements of ASME A112.19.15.		N/A
4.6	Thresholds Thresholds shall comply with the applicable requirements of Sections 5.7 and 5.8. In addition, aluminum thresholds shall (a) be made of anodized aluminum; and (b) have a minimum wall thickness of 2.54 mm (0.100 in).		N/A
4.7	Doors		
4.7.1	Metallic profiles of shower doors with factory - installed plumbing components shall (a) be protected with a non - corrosive coating; and (b) shall comply with clause 5.2.2 of ASME A112.18.1/CSA B125.1.		N/A
4.7.2	Door hinges shall be made of brass, aluminum, or zinc die castings, stainless steel, or steel coated with decorative organic coatings complying with clause 5.2.4 of ASME A112.18.1/CSA B125.1.		N/A
4.8	Tie Bars Tie bars shall be made of brass or aluminum having a minimum wall thickness of 1.22 mm (0.048 in).		N/A
4.9	Accessible Enclosures Enclosures designed to be accessible shall comply with the applicable requirements of ICC/ANSI A117.1.		N/A
5	Testing Requirements		

SGS-CSTC Standards Technical Services Co., Ltd. Guangzhou Branch
检验检测专用章 Inspection & Testing Services

Unless otherwise agreed in writing, this document is issued by the Company subject to its General Conditions of Service printed overleaf, available on request or accessible at https://www.sgs.com/en/Terms-and-Conditions. Attention is drawn to the limitation of liability, indemnification and jurisdiction issues defined therein. Any holder of this document is advised that information contained hereon reflects the Company's findings at the time of its intervention only and within the limits of Client's instructions, if any. The Company's sole responsibility is to its Client and this document does not exonerate parties to a transaction from exercising all their rights and obligations under the transaction documents. This document cannot be reproduced except in full, without prior written approval of the Company. Any unauthorized alteration, forgery or falsification of the content or appearance of this document is unlawful and offenders may be prosecuted to the fullest extent of the law. Unless otherwise stated the results shown in this test report refer only to the sample(s) tested and such sample(s) are retained for 30 days only.
Attention: To check the authenticity of testing /inspection report & certificate, please contact us at telephone: (86-755) 8307 1443, or email: CN.Doccheck@sgs.com
No.198, Kezhu Road, Science City, Economic & Technological Development Area, Guangzhou, Guangdong, China 510663 t (86-20) 82155555 www.sgsgroup.com.cn
中国·广东·广州高新技术产业开发区科学城科珠路198号 邮编: 510663 t (86-20) 82155555 sgs.china@sgs.com
Member of the SGS Group (SGS SA)

IAPMO IGC 154			
Clause	**Test Item**	**Result**	**Rating**
5.1	Test Specimens Tests for enclosures and shower/steam panels shall be conducted on complete shower/steam panel or enclosure assemblies, unless otherwise specified in the test procedure.	Complied	Pass
5.2	Load Tests for Enclosures		
5.2.1	Load Test for Complete Enclosures The load test for complete enclosures shall be conducted as follows: (a) Install the test specimen in accordance with the manufacturer's installation instruction. (b) Apply a horizontal force of 667 ± 22 N (150 ± 5 lbf) to each area where a fitting could be gripped. Note: When the test specimen does not have factory-supplied fitting, use supply fitting that comply with ASME A112.18.1/CSA B125.1 for conducting the test. (c) Hold the load for 1 min. The test specimen shall not pull away from the wall (or from the enclosure, when the test specimen is a shower/steam panel). In addition, fittings shall not pull away from the enclosure or shower/steam panel.		N/A
5.2.2	Load Test for Metal Panels of Enclosures Metal panels of enclosures shall be tested in accordance with the load test for bathtub and shower wall surrounds specified in Clause 5.8.4 of CSA B45.5/IAPMO Z124.		N/A
5.3	Load Test for Shower/Steam Panels The load test for shower/steam panels shall be conducted as follows: (a) Install the test specimen in accordance with the manufacturer's installation instructions. (b) Apply a downward force of 667 ± 22 N (150 ± 5 lbf) to one of the fittings that could be gripped. (c) Hold the downward force for 1 min. (d) Apply a horizontal force of 667 ± 22 N (150 ± 5 lbf) to one of the fittings that could be gripped. The shower/steam panel shall not move downward or pull away from the wall or from the enclosure. In addition, fittings shall not pull away from the shower/steam panel.		N/A
5.4	Tests for Flexible TPU Tubing		

Unless otherwise agreed in writing, this document is issued by the Company subject to its General Conditions of Service printed overleaf, available on request or accessible at https://www.sgs.com/en/Terms-and-Conditions. Attention is drawn to the limitation of liability, indemnification and jurisdiction issues defined therein. Any holder of this document is advised that information contained hereon reflects the Company's findings at the time of its intervention only and within the limits of Client's instructions, if any. The Company's sole responsibility is to its Client and this document does not exonerate parties to a transaction from exercising all their rights and obligations under the transaction documents. This document cannot be reproduced except in full, without prior written approval of the Company. Any unauthorized alteration, forgery or falsification of the content or appearance of this document is unlawful and offenders may be prosecuted to the fullest extent of the law. Unless otherwise stated the results shown in this test report refer only to the sample(s) tested and such sample(s) are retained for 30 days only.
Attention: To check the authenticity of testing /inspection report & certificate, please contact us at telephone: (86-755) 8307 1443, or email: CN.Doccheck@sgs.com
No.198, Kezhu Road, Science City, Economic & Technological Development Area, Guangzhou, Guangdong, China 510663 t (86–20) 82155555 www.sgsgroup.com.cn
中国・广东・广州高新技术产业开发区科学城科珠路198号 邮编: 510663 t (86–20) 82155555 sgs.china@sgs.com
Member of the SGS Group (SGS SA)

IAPMO IGC 154			
Clause	**Test Item**	**Result**	**Rating**
5.4.1	Thermal Cycling Test for Flexible TPU Tubing The thermal cycling test for flexible TPU spiral tubing used with push - fit fittings in non-continuous pressure applications shall be conducted as follows: (a) Connect the flexible TPU spiral tubing to the push - fit fitting and the body spray or shower nozzle in accordance with the manufacturer's installation instructions. (b) Open the body spray or shower nozzle to the maximum flow. (c) Pressurize the test assembly to 483 ± 17 kPa (70 ± 2.5 psi) with water at 60 ± 2 ºC (140 ± 3ºF). (d) Hold the pressure for 20 s. (e) Shut off the water and allow the test assembly to depressurize for 10 s. (f) Pressurize the test assembly to 483 ± 17 kPa (70 ± 2.5 psi) with water at 10 ± 2 ºC (50 ± 3ºF) (g) Hold the pressure for 20 s. (h) Shut off the water and allow the test assembly to depressurize for 10 s. (i) Steps (c) to (h) constitute one cycle. Cycle the test assembly at a rate of 1 cycle per minute for a total of 10,000 cycles. There shall be no water leakage, separation between the tubing and the push - fit fitting, or any sign of tubing rupture.		N/A

Unless otherwise agreed in writing, this document is issued by the Company subject to its General Conditions of Service printed overleaf, available on request or accessible at https://www.sgs.com/en/Terms-and-Conditions. Attention is drawn to the limitation of liability, indemnification and jurisdiction issues defined therein. Any holder of this document is advised that information contained hereon reflects the Company's findings at the time of its intervention only and within the limits of Client's instructions, if any. The Company's sole responsibility is to its Client and this document does not exonerate parties to a transaction from exercising all their rights and obligations under the transaction documents. This document cannot be reproduced except in full, without prior written approval of the Company. Any unauthorized alteration, forgery or falsification of the content or appearance of this document is unlawful and offenders may be prosecuted to the fullest extent of the law. Unless otherwise stated the results shown in this test report refer only to the sample(s) tested and such sample(s) are retained for 30 days only.
Attention: To check the authenticity of testing /inspection report & certificate, please contact us at telephone: (86-755) 8307 1443, or email: CN.Doccheck@sgs.com
No.198, Kezhu Road, Science City, Economic & Technological Development Area, Guangzhou, Guangdong, China 510663 t (86-20) 82155555 www.sgsgroup.com.cn
中国·广东·广州高新技术产业开发区科学城科珠路198号 邮编: 510663 t (86-20) 82155555 sgs.china@sgs.com
Member of the SGS Group (SGS SA)

IAPMO IGC 154			
Clause	**Test Item**	**Result**	**Rating**
5.4.2	Pull - Out Test for Flexible TPU Tubing The pull - out test for flexible TPU spiral tubing used with push - fit fittings in non-continuous pressure applications shall be conducted as follows: (a) Connect the flexible TPU tubing to the push - fit fitting in accordance with the manufacturer's installation instructions. (b) Condition the test assembly to a temperature of 10 ± 2 ºC (50 ± 3ºF) for 1 h. (c) Grip the push - fit fitting and gradually, over a period of 10 s, pull with a force of 156 N (35 lbf) parallel to the axis of the tubing. (d) Hold the load for 10 min. (e) Examine the test assembly for any signs of separation. (f) Pressurize the test assembly with air to 483 ± 17 kPa (70 ± 2.5 psi) and immerse in water at temperature of 10 ± 2 ºC (50 ± 3ºF). (g) Examine for any signs of leakage. There shall be no visible signs of separation or leakage.		N/A
5.5	Pressure Test for Flexible Tubing The pressure test for flexible tubing and hoses in non - continuous pressure applications shall be conducted as follows: (a) Pressurize the test specimen to 862± 7 kPa with water at 66 ± 2 ºC (150ºF± 3ºF). (b) Hold the test pressure for 5 min. The test specimen shall not leak or otherwise fail.		N/A
5.6	Tests for Glass Inserts		
5.6.1	Watertightness Test for Glass Inserts The watertightness test for joints between glass inserts and enclosures or shower panels shall be conducted as follows: (a) Place a shower head capable of flowing 9.5 L/min (2.5 gpm) of water at 550 kPa (80 psi) 600 mm (2 ft) above and 600 mm (2 ft) in front of the uppermost joint. (b) Ensure that the water is at room temperature. (c) Direct the center of the spray at the uppermost joint. (d) Spray for at least 30 min. There shall be no leakage through the joint.		N/A

Unless otherwise agreed in writing, this document is issued by the Company subject to its General Conditions of Service printed overleaf, available on request or accessible at https://www.sgs.com/en/Terms-and-Conditions. Attention is drawn to the limitation of liability, indemnification and jurisdiction issues defined therein. Any holder of this document is advised that information contained hereon reflects the Company's findings at the time of its intervention only and within the limits of Client's instructions, if any. The Company's sole responsibility is to its Client and this document does not exonerate parties to a transaction from exercising all their rights and obligations under the transaction documents. This document cannot be reproduced except in full, without prior written approval of the Company. Any unauthorized alteration, forgery or falsification of the content or appearance of this document is unlawful and offenders may be prosecuted to the fullest extent of the law. Unless otherwise stated the results shown in this test report refer only to the sample(s) tested and such sample(s) are retained for 30 days only.
Attention: To check the authenticity of testing /inspection report & certificate, please contact us at telephone: (86-755) 8307 1443, or email: CN.Doccheck@sgs.com
No.198, Kezhu Road, Science City, Economic & Technological Development Area, Guangzhou, Guangdong, China 510663 t (86-20) 82155555 www.sgsgroup.com.cn
中国·广东·广州高新技术产业开发区科学城科珠路198号 邮编: 510663 t (86-20) 82155555 sgs.china@sgs.com
Member of the SGS Group (SGS SA)

IAPMO IGC 154			
Clause	**Test Item**	**Result**	**Rating**
5.6.2	Thermal Shock Test for Glass Inserts Glass inserts shall be tested in accordance with the thermal shock resistance test specified in Section 5.16 of CSA B45.5/IAPMO Z124, except that the water temperatures shall be 10 ± 2 ºC (50 ± 3ºF) and 49 ± 2 ºC (120 ± 3ºF). The glass inserts shall not break.		N/A
5.7	Tests for Thresholds		
5.7.1	General Tests for thresholds shall be conducted on the largest size thresholds. For testing purposes, prior to the application of waterproofing membranes, mortar, and ceramic tiles, thresholds shall be installed in accordance with the manufacturer's installation instructions simulating field conditions of permanent fastening.		N/A
5.7.2	Vertical Load Test The load test for thresholds shall be conducted as follows: (a) Apply a 1,334 ± 22 N (300 ± 5 lbf) force to the center of the horizontal threshold surface using a 75 mm (3 in) disc (see Figure 1). (b) Hold the load for 1 min. (c) Measure the deflection with the load in place. (d) Remove the load. (e) Measure the deflection 10 min after removal of the load. (f) Apply the force at two other locations on the horizontal surface, 150 mm (6 in) from each end. (g) Examine the test specimen in accordance with Items (b) to (d) of Clause 5.4.1 of CSA B45.5/IAPMO Z124. There shall be no deformation or visible cracks on the surface of the test specimen. The deflection of the top surface, measured while the load is in place, shall not exceed 3.8 mm (0.15 in).The residual deflection, after removal of the load, shall not exceed 1.5 mm (0.06 in).		N/A

Unless otherwise agreed in writing, this document is issued by the Company subject to its General Conditions of Service printed overleaf, available on request or accessible at https://www.sgs.com/en/Terms-and-Conditions. Attention is drawn to the limitation of liability, indemnification and jurisdiction issues defined therein. Any holder of this document is advised that information contained hereon reflects the Company's findings at the time of its intervention only and within the limits of Client's instructions, if any. The Company's sole responsibility is to its Client and this document does not exonerate parties to a transaction from exercising all their rights and obligations under the transaction documents. This document cannot be reproduced except in full, without prior written approval of the Company. Any unauthorized alteration, forgery or falsification of the content or appearance of this document is unlawful and offenders may be prosecuted to the fullest extent of the law. Unless otherwise stated the results shown in this test report refer only to the sample(s) tested and such sample(s) are retained for 30 days only.
Attention: To check the authenticity of testing /inspection report & certificate, please contact us at telephone: (86-755) 8307 1443, or email: CN.Doccheck@sgs.com
No.198, Kezhu Road, Science City, Economic & Technological Development Area, Guangzhou, Guangdong, China 510663 t (86-20) 82155555 www.sgsgroup.com.cn
中国·广东·广州高新技术产业开发区科学城科珠路198号 邮编: 510663 t (86-20) 82155555 sgs.china@sgs.com
Member of the SGS Group (SGS SA)

IAPMO IGC 154			
Clause	**Test Item**	**Result**	**Rating**
5.7.3	Side Load Test The side load test for thresholds shall be conducted as follows: (a) Apply a 222 ± 4 N (50 ± 1 lbf) force to the center of a vertical threshold surface using a 75 mm (3 in) disc. (b) Hold the load for 1 min. (c) Examine the test thresholds in accordance with Items (b) to (d) of Clause 5.4.1 of CSA B45.5/IAPMO Z124. There shall be no visible cracks or deformation on the threshold.		N/A
5.7.4	Thermal Distortion Test for Thresholds The thermal distortion test for thresholds shall be conducted as follows: (a) Locate and mark a 250 × 100 mm (10 × 4 in) test area on the horizontal plane of the threshold that provides a largest possible contact surface. (b) Heat a 250 × 100 x 1.6 mm (10 × 4 × 0.0625 in) aluminum sheet for 15 min in an oven at 232 ± 6 ºC (450 ± 10ºF). (c) Remove the aluminum sheet from the oven and place it on the test area for 10 min. (d) Remove the aluminum sheet and allow the test area to cool for 4 h in ambient laboratory conditions. (e) Examine the test specimen. There shall be no cracking, blistering, delaminating, or visible distortion.		N/A
5.8	Corrosion Test for Metallic Parts Aluminum thresholds, panel backsplash enclosures, metallic profiles of shower doors, hinges, tie bars, and other metallic components shall be tested in accordance with Clause 5.2.2 of ASME A112.18.1/CSA B125.1.	Test method: ASTM B117 Test duration: 24h No visual surface defect.	Pass

Unless otherwise agreed in writing, this document is issued by the Company subject to its General Conditions of Service printed overleaf, available on request or accessible at https://www.sgs.com/en/Terms-and-Conditions. Attention is drawn to the limitation of liability, indemnification and jurisdiction issues defined therein. Any holder of this document is advised that information contained hereon reflects the Company's findings at the time of its intervention only and within the limits of Client's instructions, if any. The Company's sole responsibility is to its Client and this document does not exonerate parties to a transaction from exercising all their rights and obligations under the transaction documents. This document cannot be reproduced except in full, without prior written approval of the Company. Any unauthorized alteration, forgery or falsification of the content or appearance of this document is unlawful and offenders may be prosecuted to the fullest extent of the law. Unless otherwise stated the results shown in this test report refer only to the sample(s) tested and such sample(s) are retained for 30 days only.
Attention: To check the authenticity of testing /inspection report & certificate, please contact us at telephone: (86-755) 8307 1443, or email: CN.Doccheck@sgs.com
No.198, Kezhu Road, Science City, Economic & Technological Development Area, Guangzhou, Guangdong, China 510663 t (86-20) 82155555 www.sgsgroup.com.cn
中国·广东·广州高新技术产业开发区科学城科珠路198号 邮编: 510663 t (86-20) 82155555 sgs.china@sgs.com
Member of the SGS Group (SGS SA)

IAPMO IGC 154			
Clause	**Test Item**	**Result**	**Rating**
5.9	Load Test for Doors The load test for doors shall be conducted as follows: (a) Install the shower door installed in accordance with the manufacturer's installation instructions. (b) Close the shower door. (c) Apply a downward force of 667 ± 22 N (150 ± 5 lbf) to one of the door handles. (d) Hold the load for 1 min. The handle shall not move downward and the hinges shall show no signs of fracture or distortion under the applied load.	The handle did not move downward and had no fracture or distortion under the applied load.	Pass
5.10	Load Test for Floor - Mounted Showers The load test for floor - mounted showers shall be conducted as follows: (a) Install the test specimen in accordance with the manufacturer's installation instructions. (b) Apply a 667 ± 22 N (150 ± 5 lbf) horizontal force at a point (i) 1,500 mm (5 ft) above the floor and (ii) on the center of the width of the test specimen. (c) Hold the load for 1 min. (d) Measure the angle of tilt. (e) Remove the load and wait for 1 min. (f) Measure the angle of tilt again, after removal of the load. (g) Repeat steps (b) to (e) applying the force at (i) a point on the test specimen perpendicular, in the horizontal plane, to the original point of application; and ; and (ii) two additional separate locations at the same height on the test specimen. (h) Record a total of eight measurements. The test specimen shall not tilt more than 5º from its original vertical position.		N/A

Unless otherwise agreed in writing, this document is issued by the Company subject to its General Conditions of Service printed overleaf, available on request or accessible at https://www.sgs.com/en/Terms-and-Conditions. Attention is drawn to the limitation of liability, indemnification and jurisdiction issues defined therein. Any holder of this document is advised that information contained hereon reflects the Company's findings at the time of its intervention only and within the limits of Client's instructions, if any. The Company's sole responsibility is to its Client and this document does not exonerate parties to a transaction from exercising all their rights and obligations under the transaction documents. This document cannot be reproduced except in full, without prior written approval of the Company. Any unauthorized alteration, forgery or falsification of the content or appearance of this document is unlawful and offenders may be prosecuted to the fullest extent of the law. Unless otherwise stated the results shown in this test report refer only to the sample(s) tested and such sample(s) are retained for 30 days only.
Attention: To check the authenticity of testing /inspection report & certificate, please contact us at telephone: (86-755) 8307 1443, or email: CN.Doccheck@sgs.com
No.198, Kezhu Road, Science City, Economic & Technological Development Area, Guangzhou, Guangdong, China 510663 t (86-20) 82155555 www.sgsgroup.com.cn
中国·广东·广州高新技术产业开发区科学城科珠路198号 邮编: 510663 t (86-20) 82155555 sgs.china@sgs.com
Member of the SGS Group (SGS SA)

IAPMO IGC 154			
Clause	**Test Item**	**Result**	**Rating**
5.11	Temperature Discharge Test from Steam Panel The temperature discharge test at the steam panel discharge interface shall be conducted as follows: (a) Install steam panel in accordance to manufacturer's installation instructions, (b) Enclose steam panel discharge outlet into a 0.03 m^3 (1 ft^3) Styrofoam box (constructed of panels a minimum 12.7 mm (1/2 in) thick), with a thermocouple inside. (c) Set hot water inlet temperature at 60 ± 2 ºC (140 ± 3ºF), at a flow rate up to 9.5 Lpm (2.5 gpm) and flowing pressure of 551 ± 7 kPa (80 ± 1 psi), (d) Begin hot water flow into steam panel, upon reaching stabilized steady - state - steady - flow conditions, record temperature at steam panel discharge interface inside the box every 10.0 min over a 30.0 min time period. Record highest temperature measured. (e) Continue to run the hot water flow for 24 hours. The highest temperatures measured shall not exceed 58 ± 2 ºC (137 ± 3ºF) at the discharge interface of the panel, and shall show no signs of leaking cracking or deterioration of materials.		N/A
6	Markings and Accompanying Literature		
6.1	General		
6.1.1	Enclosures and shower/steam panels complying with this Standard shall be marked with the manufacturer's name or trademark or, in the case of private labelling, the name of the customer for whom the enclosure or shower panel was manufactured.	Complied	Pass
6.1.2	Markings on enclosures and shower/steam panels shall be permanent, legible, and visible after installation.	Complied	Pass
6.2	Third - Party Manufacturers and Replacement Parts		
6.2.1	Enclosure and shower/steam panel components manufactured by third parties shall bear a mark identifying the third - party manufacturer.		N/A
6.2.2	Alternatively, enclosures and shower/steam panels may indicate, on a permanently affixed label, the web address or telephone number of a service department from which end - users can obtain replacement parts.		N/A

Unless otherwise agreed in writing, this document is issued by the Company subject to its General Conditions of Service printed overleaf, available on request or accessible at https://www.sgs.com/en/Terms-and-Conditions. Attention is drawn to the limitation of liability, indemnification and jurisdiction issues defined therein. Any holder of this document is advised that information contained hereon reflects the Company's findings at the time of its intervention only and within the limits of Client's instructions, if any. The Company's sole responsibility is to its Client and this document does not exonerate parties to a transaction from exercising all their rights and obligations under the transaction documents. This document cannot be reproduced except in full, without prior written approval of the Company. Any unauthorized alteration, forgery or falsification of the content or appearance of this document is unlawful and offenders may be prosecuted to the fullest extent of the law. Unless otherwise stated the results shown in this test report refer only to the sample(s) tested and such sample(s) are retained for 30 days only.
Attention: To check the authenticity of testing /inspection report & certificate, please contact us at telephone: (86-755) 8307 1443, or email: CN.Doccheck@sgs.com
No.198, Kezhu Road, Science City, Economic & Technological Development Area, Guangzhou, Guangdong, China 510663 t (86-20) 82155555 www.sgsgroup.com.cn
中国·广东·广州高新技术产业开发区科学城科珠路198号 邮编: 510663 t (86-20) 82155555 sgs.china@sgs.com
Member of the SGS Group (SGS SA)

IAPMO IGC 154			
Clause	**Test Item**	**Result**	**Rating**
6.3	Temperature identification Temperature identification markings shall be in accordance with Clause 6.2 of ASME A112.18.1/CSA B125.1.		N/A
6.4	Instructions		
6.4.1	Each enclosure and shower/steam panel shall be accompanied by a set of detailed instructions for their installation, adjustment, and care and maintenance.	Complied	Pass
6.4.2	Installation instructions shall specify: (a) Use and installation of certified retrofit components not included with product. (b) Limit to the steam panel hot water inlet temperature to be not greater than 60 ± 2 ºC (140 ±3ºF), and specify installing a certified ASSE 1070 temperature limiting device on water inlet line, if necessary.		N/A
6.5	Packaging Markings on packaging shall be in accordance with Clause 6.3 of ASME A112.18.1/CSA B125.1.	Complied	Pass

Unless otherwise agreed in writing, this document is issued by the Company subject to its General Conditions of Service printed overleaf, available on request or accessible at https://www.sgs.com/en/Terms-and-Conditions. Attention is drawn to the limitation of liability, indemnification and jurisdiction issues defined therein. Any holder of this document is advised that information contained hereon reflects the Company's findings at the time of its intervention only and within the limits of Client's instructions, if any. The Company's sole responsibility is to its Client and this document does not exonerate parties to a transaction from exercising all their rights and obligations under the transaction documents. This document cannot be reproduced except in full, without prior written approval of the Company. Any unauthorized alteration, forgery or falsification of the content or appearance of this document is unlawful and offenders may be prosecuted to the fullest extent of the law. Unless otherwise stated the results shown in this test report refer only to the sample(s) tested and such sample(s) are retained for 30 days only.
Attention: To check the authenticity of testing /inspection report & certificate, please contact us at telephone: (86-755) 8307 1443, or email: CN.Doccheck@sgs.com
No.198, Kezhu Road, Science City, Economic & Technological Development Area, Guangzhou, Guangdong, China 510663 t (86–20) 82155555 www.sgsgroup.com.cn
中国・广东・广州高新技术产业开发区科学城科珠路198号 邮编: 510663 t (86–20) 82155555 sgs.china@sgs.com
Member of the SGS Group (SGS SA)

Test Conducted: Based on clause 5.2 of ASME A112.18.1-2024/CSA B125.1: 24 Plumbing supply fittings

Test Results: Details shown as following table

ASME A112.18.1/CSA B125.1			
Clauses	**Test Item**	**Result**	**Rating**
5.2	Coatings		
5.2.1	General The fittings selected for testing shall be as received from the manufacturer and shall not have been subjected to any other test. The significant surfaces of the coated components shall be free of surface defects and uncoated areas and shall not be stained.	Complied	Pass
5.2.2	Corrosion (all substrates and coatings) After undergoing the applicable test specified in Clause 5.2.2.2.1, coatings shall not show more than one surface defect in any 650 mm^2 (1.0 in^2) area of the significant surface or up to three surface defects on a 25 mm (1.0 in) length of parting line. The surface defects shall be not larger than 0.8 mm (0.03 in) in any dimension. If widely scattered surface defects are observed after testing (as occasionally occurs), such defects shall not significantly deface or adversely affect the function of the coated part.	No defects after 24h neutral salt test.	Pass
5.2.3	Adhesion		
5.2.3.1	Performance requirements The coating and the separate layers of multi-layer coatings shall be sufficiently adherent to each other and to the base material to comply with one of the adhesion tests specified in Clause 5.2.3.2, 5.2.3.3, or 5.2.3.4, as applicable.	Refer to the test result of clause 5.2.3.3.	Pass
5.2.3.2	Electrodeposited and PVD coatings on metals Specimens shall be tested in accordance and comply with one of the following adhesion tests specified in ASTM B571: a) Paragraph 4: burnish test; b) Paragraph 7: file test; c) Paragraph 8: grind-saw test; or d) Paragraph 9: heat-quench test.		N/A

Unless otherwise agreed in writing, this document is issued by the Company subject to its General Conditions of Service printed overleaf, available on request or accessible at https://www.sgs.com/en/Terms-and-Conditions. Attention is drawn to the limitation of liability, indemnification and jurisdiction issues defined therein. Any holder of this document is advised that information contained hereon reflects the Company's findings at the time of its intervention only and within the limits of Client's instructions, if any. The Company's sole responsibility is to its Client and this document does not exonerate parties to a transaction from exercising all their rights and obligations under the transaction documents. This document cannot be reproduced except in full, without prior written approval of the Company. Any unauthorized alteration, forgery or falsification of the content or appearance of this document is unlawful and offenders may be prosecuted to the fullest extent of the law. Unless otherwise stated the results shown in this test report refer only to the sample(s) tested and such sample(s) are retained for 30 days only.
Attention: To check the authenticity of testing /inspection report & certificate, please contact us at telephone: (86-755) 8307 1443, or email: CN.Doccheck@sgs.com
No.198, Kezhu Road, Science City, Economic & Technological Development Area, Guangzhou, Guangdong, China 510663 t (86-20) 82155555 www.sgsgroup.com.cn
中国·广东·广州高新技术产业开发区科学城科珠路198号 邮编: 510663 t (86-20) 82155555 sgs.china@sgs.com
Member of the SGS Group (SGS SA)

ASME A112.18.1/CSA B125.1			
Clauses	**Test Item**	**Result**	**Rating**
5.2.3.3	Electrodeposited and PVD coatings on plastics Fittings or component parts of fittings that have electrodeposited coatings on plastic bases, including those with additional organic coatings, shall comply with the following requirements when tested in accordance with Clause 5.2.3.3.2: a) No surface defects shall be present on significant surfaces. b) Non-significant surfaces, gates, and parting lines may have minor cracks not longer than 6 mm (0.25 in), provided that there is no loss of adhesion between the base material and the coating. c) Blisters not exceeding 6 mm^2 (0.01 in^2) in area shall be acceptable within 6 mm (0.25 in) of an injection point. If an injection point is within 6 mm (0.25 in) of a significant surface, Item a) shall apply. d) Warpage shall be considered acceptable only where it does not affect the performance of the fitting or component. The adhesion of organic coatings shall be evaluated following the procedure specified in Clause 5.2.3.4 and shall not be evaluated during the test specified in Clause 5.2.3.3.2.	No defect after test	Pass
5.2.3.4	Organic coatings The adhesion of organic coatings shall be tested in accordance with Method A of ASTM D3359. The organic coating shall have an adhesion rating of 3A or better.		N/A
5.2.4	Decorative organic coatings In addition to complying with the adhesion testing specified in Clause 5.2.3.4, decorative organic coatings shall show no surface defects when they are tested in accordance with Clauses 5.2.4.2 and 5.2.4.3, and their finish shall not erode in such a way that the surface directly beneath the organic coating is exposed when they are tested in accordance with Clause 5.2.4.4.		N/A
5.2.4.2	Water degradation Specimens shall be immersed in distilled water maintained at 38 ± 1 °C (100 ± 2 °F) for 24 ± 0.5 h in a corrosion-proof container and then removed and examined.		N/A

SGS-CSTC Standards Technical Services Co., Ltd. Guangzhou Branch

Unless otherwise agreed in writing, this document is issued by the Company subject to its General Conditions of Service printed overleaf, available on request or accessible at https://www.sgs.com/en/Terms-and-Conditions. Attention is drawn to the limitation of liability, indemnification and jurisdiction issues defined therein. Any holder of this document is advised that information contained hereon reflects the Company's findings at the time of its intervention only and within the limits of Client's instructions, if any. The Company's sole responsibility is to its Client and this document does not exonerate parties to a transaction from exercising all their rights and obligations under the transaction documents. This document cannot be reproduced except in full, without prior written approval of the Company. Any unauthorized alteration, forgery or falsification of the content or appearance of this document is unlawful and offenders may be prosecuted to the fullest extent of the law. Unless otherwise stated the results shown in this test report refer only to the sample(s) tested and such sample(s) are retained for 30 days only.
Attention: To check the authenticity of testing /inspection report & certificate, please contact us at telephone: (86-755) 8307 1443, or email: CN.Doccheck@sgs.com
No.198, Kezhu Road, Science City, Economic & Technological Development Area, Guangzhou, Guangdong, China 510663 t (86–20) 82155555 www.sgsgroup.com.cn
中国·广东·广州高新技术产业开发区科学城科珠路198号 邮编: 510663 t (86–20) 82155555 sgs.china@sgs.com
Member of the SGS Group (SGS SA)

ASME A112.18.1/CSA B125.1			
Clauses	**Test Item**	**Result**	**Rating**
5.2.4.3	Soap and cleaner effects Two drops (0.10 mL total) of each of the following solutions shall be applied to the organic coating (preferably on a flat surface) and allowed to remain there for 16 h: a) ammonium hydroxide (6N); b) sodium hydroxide (6N); c) methanol (100%); and d) surfactant (100% polyethylene oxyethanol). At the end of the 16 h period, the excess liquid shall be removed by rinsing with water, and the coating shall be dried and examined. Note: Non-ionic surfactants complying with Item d) include GAF Igepal CO, GAF Igepal CA, and Shell Triton X-100.		N/A
5.2.4.4	Abrasion resistance Specimens shall be tested in accordance with Method A of ASTM D968 using 12 L (3.2 gal) of silica sand on a relatively flat surface of the specimen.		N/A

Remark:
1. N/A = Not applicable.
2. NT = Not tested as per client's request.
3. This test was conducted at Room 101, Building 3, No.1501, Kaichuang Avenue, Huangpu District, Guangzhou, Guangdong, China.
4. Unless otherwise stated, the decision rule for conformity reporting is based on Binary Statement for Simple Acceptance Rule (w=0) stated in ILAC-G8:09/2019.

SGS-CSTC Standards Technical Services Co., Ltd. Guangzhou Branch
检验检测专用章 Inspection & Testing Services

Unless otherwise agreed in writing, this document is issued by the Company subject to its General Conditions of Service printed overleaf, available on request or accessible at https://www.sgs.com/en/Terms-and-Conditions. Attention is drawn to the limitation of liability, indemnification and jurisdiction issues defined therein. Any holder of this document is advised that information contained hereon reflects the Company's findings at the time of its intervention only and within the limits of Client's instructions, if any. The Company's sole responsibility is to its Client and this document does not exonerate parties to a transaction from exercising all their rights and obligations under the transaction documents. This document cannot be reproduced except in full, without prior written approval of the Company. Any unauthorized alteration, forgery or falsification of the content or appearance of this document is unlawful and offenders may be prosecuted to the fullest extent of the law. Unless otherwise stated the results shown in this test report refer only to the sample(s) tested and such sample(s) are retained for 30 days only.
Attention: To check the authenticity of testing /inspection report & certificate, please contact us at telephone: (86-755) 8307 1443, or email: CN.Doccheck@sgs.com
No.198, Kezhu Road, Science City, Economic & Technological Development Area, Guangzhou, Guangdong, China 510663 t (86–20) 82155555 www.sgsgroup.com.cn
中国·广东·广州高新技术产业开发区科学城科珠路198号 邮编: 510663 t (86–20) 82155555 sgs.china@sgs.com
Member of the SGS Group (SGS SA)

Sample Photo(s):





End of Report

Unless otherwise agreed in writing, this document is issued by the Company subject to its General Conditions of Service printed overleaf, available on request or accessible at https://www.sgs.com/en/Terms-and-Conditions. Attention is drawn to the limitation of liability, indemnification and jurisdiction issues defined therein. Any holder of this document is advised that information contained hereon reflects the Company's findings at the time of its intervention only and within the limits of Client's instructions, if any. The Company's sole responsibility is to its Client and this document does not exonerate parties to a transaction from exercising all their rights and obligations under the transaction documents. This document cannot be reproduced except in full, without prior written approval of the Company. Any unauthorized alteration, forgery or falsification of the content or appearance of this document is unlawful and offenders may be prosecuted to the fullest extent of the law. Unless otherwise stated the results shown in this test report refer only to the sample(s) tested and such sample(s) are retained for 30 days only.
Attention: To check the authenticity of testing /inspection report & certificate, please contact us at telephone: (86-755) 8307 1443, or email: CN.Doccheck@sgs.com

No.198, Kezhu Road, Science City, Economic & Technological Development Area, Guangzhou, Guangdong, China 510663 t (86-20) 82155555 www.sgsgroup.com.cn
中国·广东·广州高新技术产业开发区科学城科珠路198号 邮编: 510663 t (86-20) 82155555 sgs.china@sgs.com

Member of the SGS Group (SGS SA)

Y-serise
Installation Instruction

Installation Dimensions:

55" - 60" W x 63" H
55" - 60" W x 76" H
49" - 54" W x 76" H
43" - 48" W x 76" H

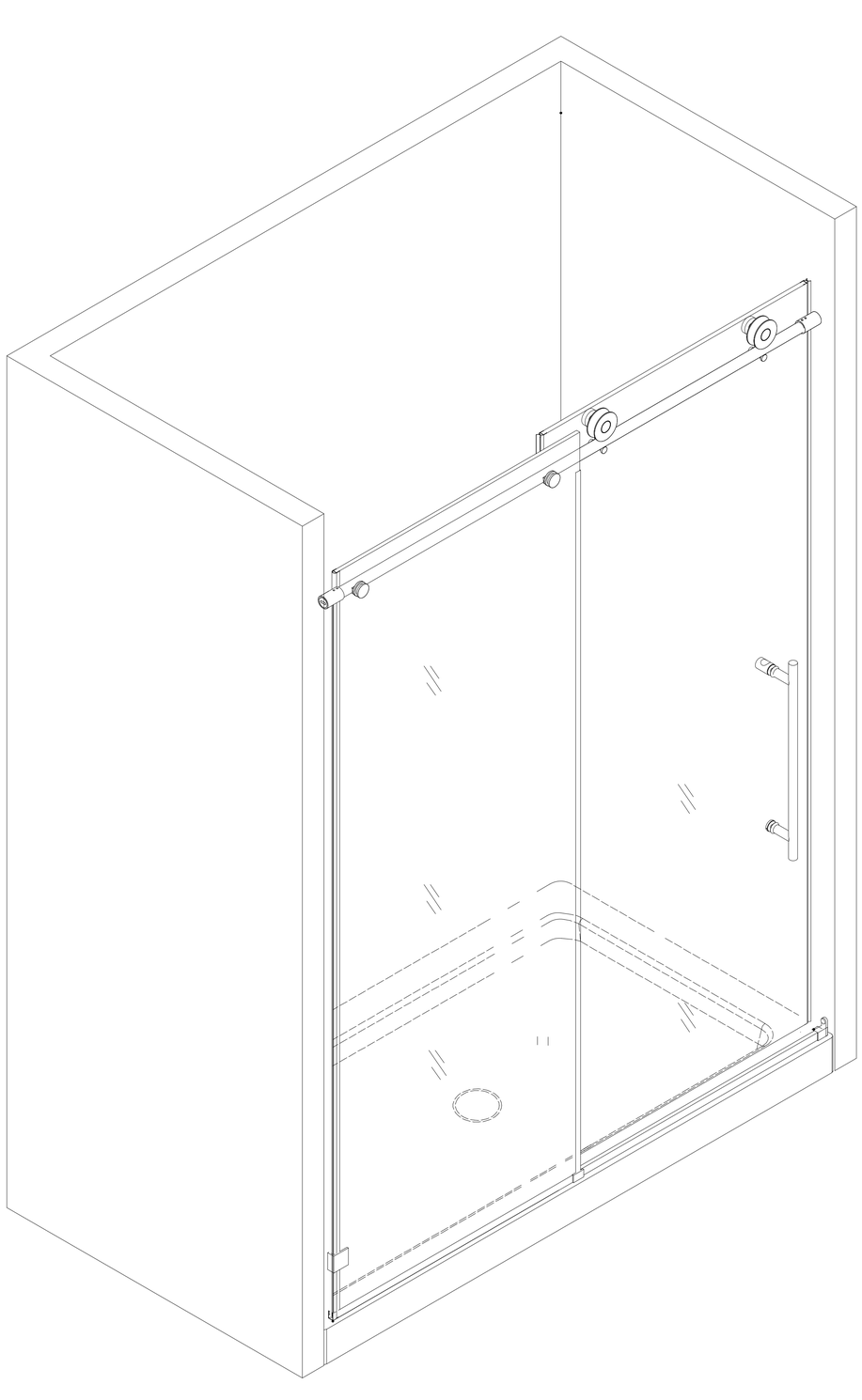

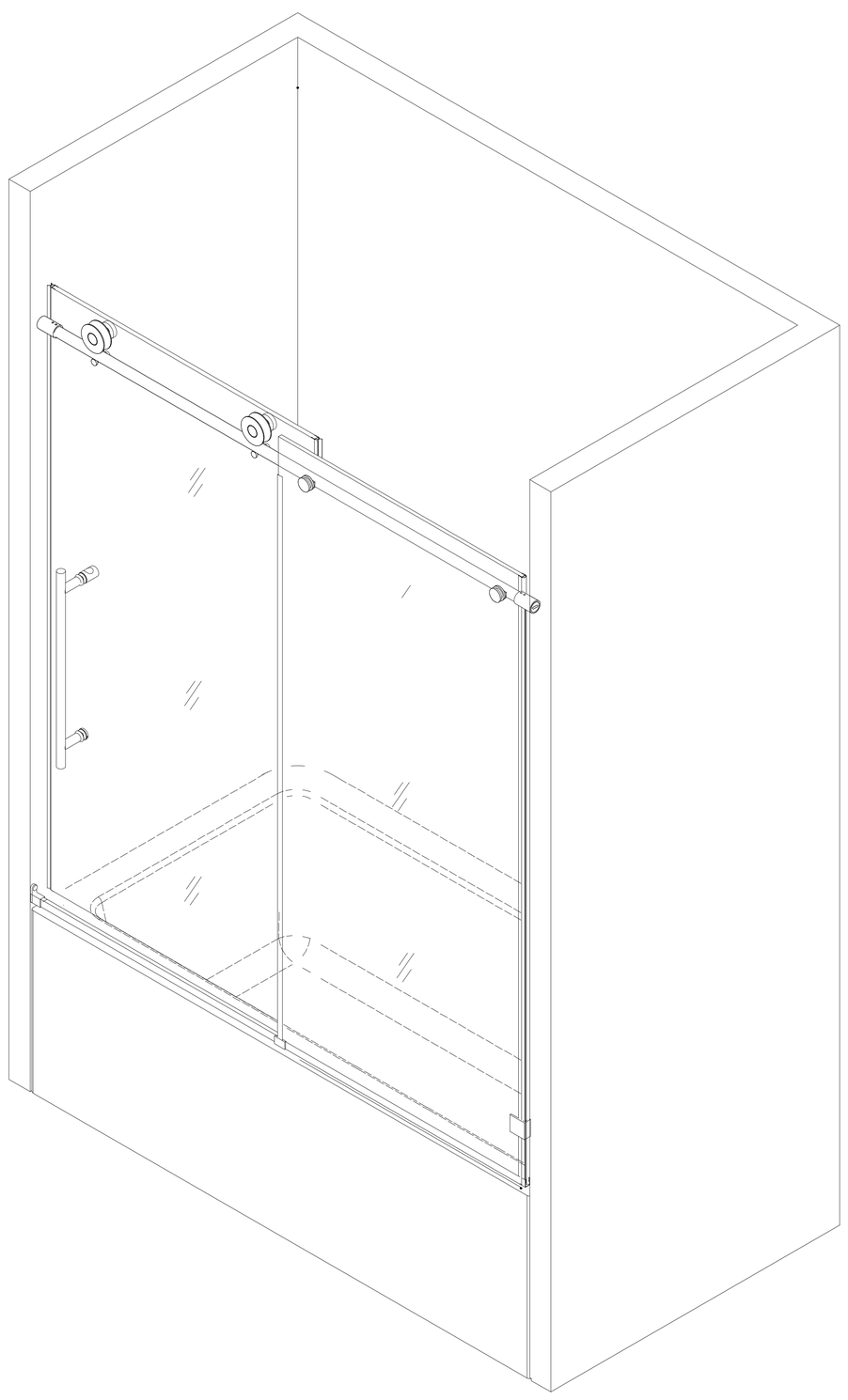

Please spend two minutes watching the installation video to save half an hour of installation time

installation video

Scan the QR code

Table of Contents

Section Title	Page #
Model Specific Preparation	1
Tools	2
Detailed Diagram of Shower Door Components	3
Parts List	4
Measure the finished opening width	5
Adjust the Soft Closing Mechanism	6
Cut The Upper Top Rail	7
Positioning wall hole	8
Install rail wall connector (3-A)	9
Left Hand Assembly Installation Steps	10-23
Right Hand Assembly Installation Steps	24-37
Replacing the buffer clamp step	38
Sealing	39

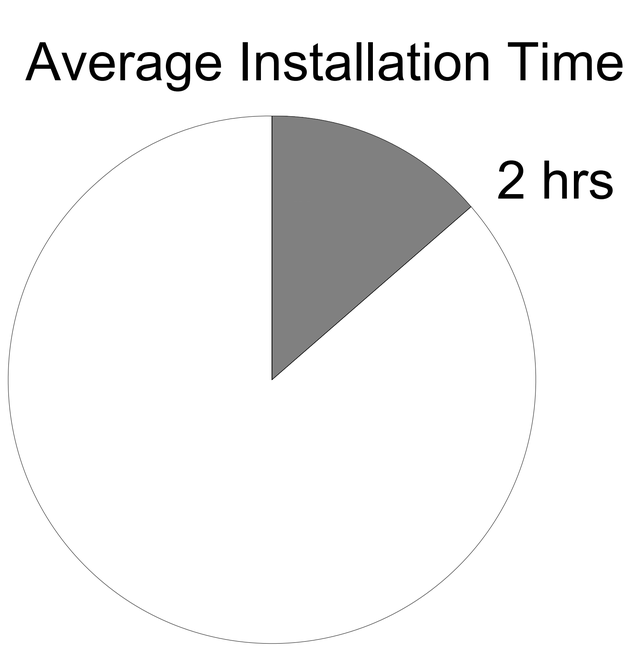

Model Specific Preparation

REQUIRED:

Verify threshold and walls with a level

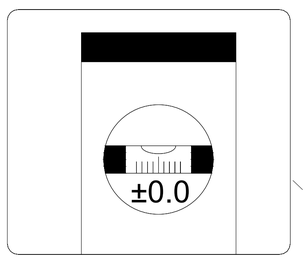

Threshold must be level

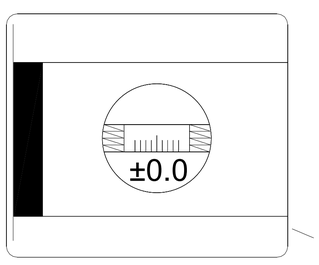

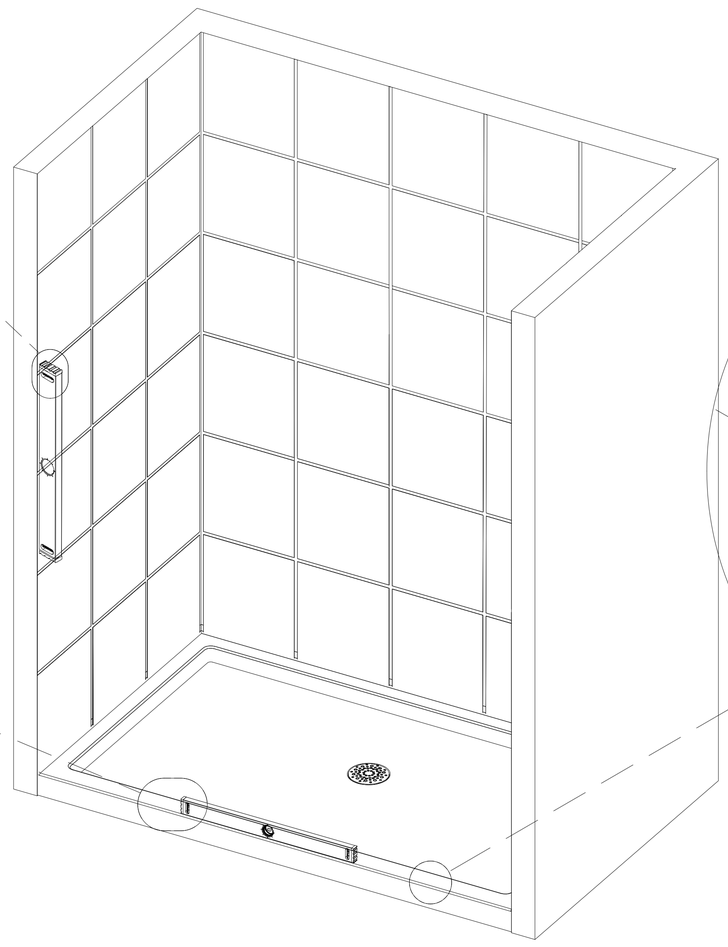

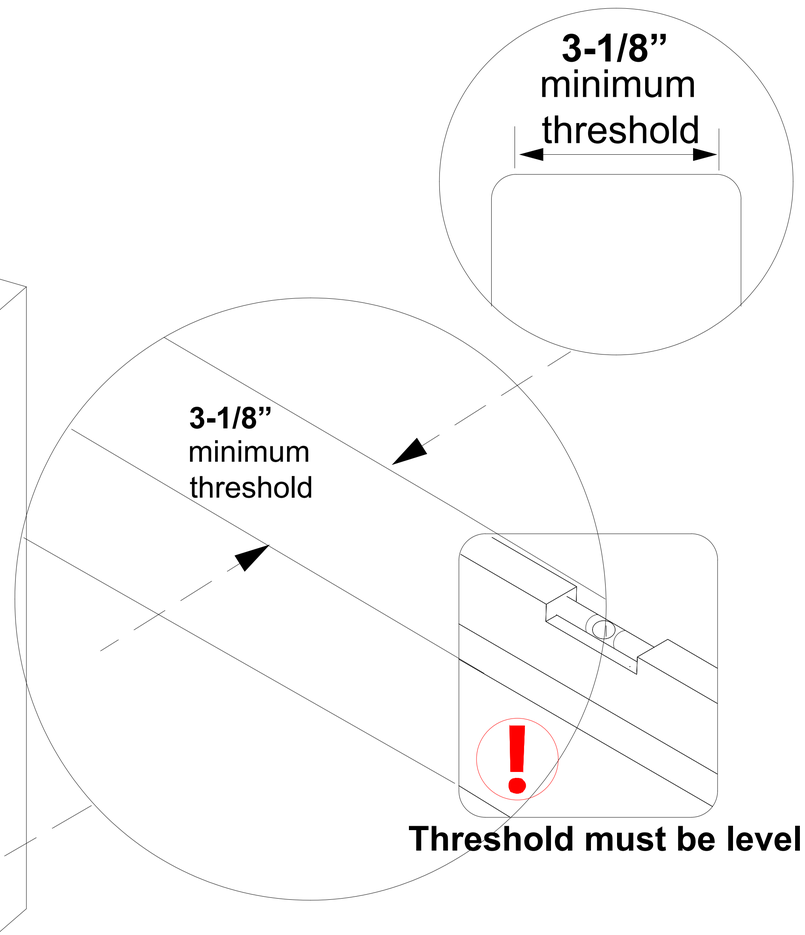

Threshold must be level

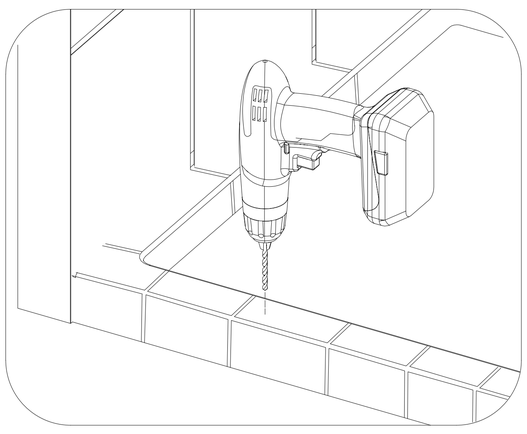

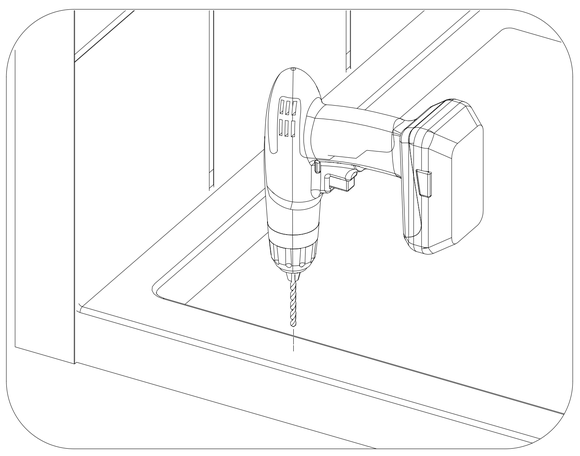

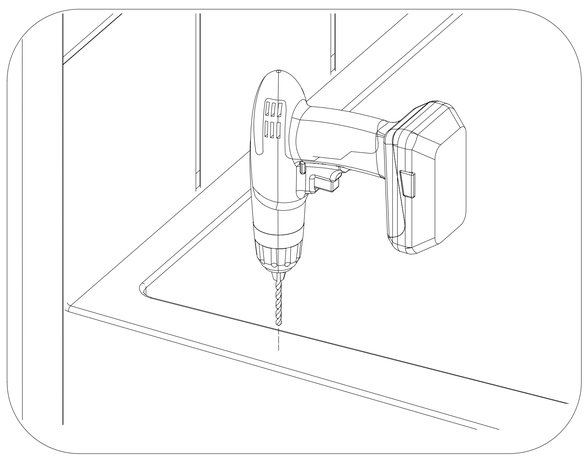

Thank you for purchasing this product. It can be installed by applying silicone sealant or drilling! Please check if the base or threshold can be drilled before installation!

Contact the manufacturer of the base, threshold material with any questions regarding the drilling of holes into their product.

Before installation, please check if there is enough space on the edge of the threshold to install the product. The minimum threshold requirement is 3-1/8” inch!

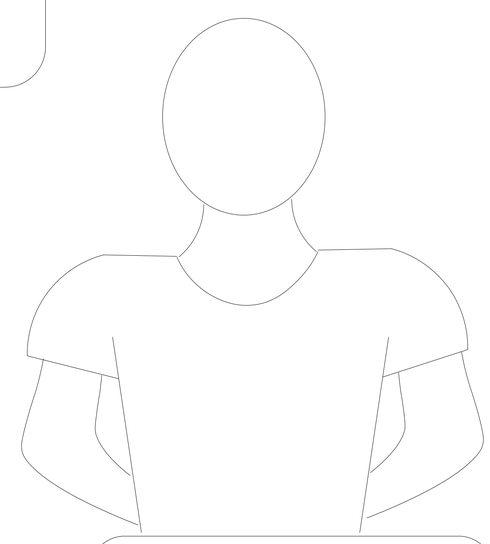

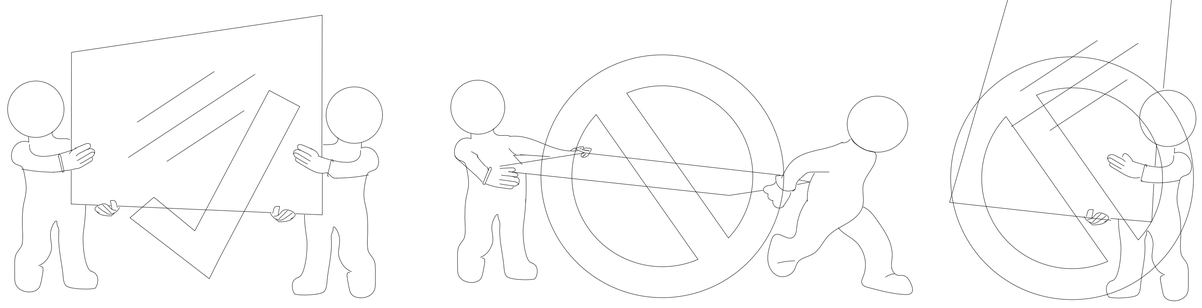

This door recommended professional installation. Two installers required.

Professional Installation recommended.

Tools

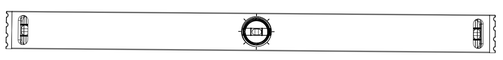

Level

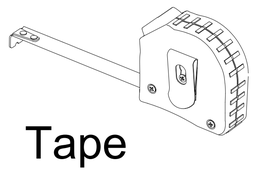

Tape Measure

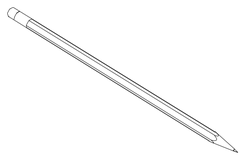

Pencil

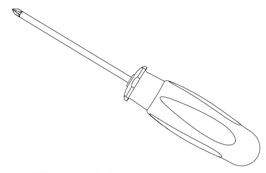

Phillips Screwdriver

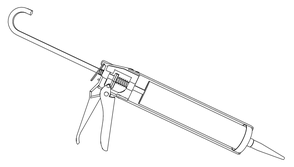

Silicone

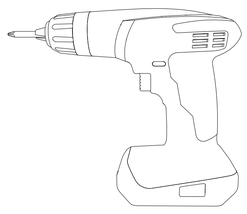

Power Drill

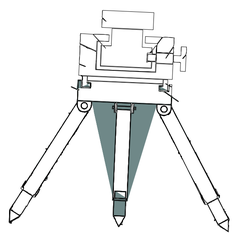

level gauge

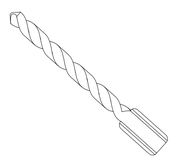

Drill Bit Ø1/4" (6mm)

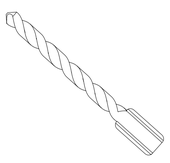

Drill Bit Ø5/16" (8mm)

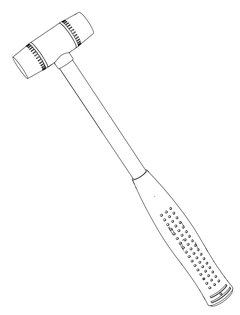

Soft Head Hammer

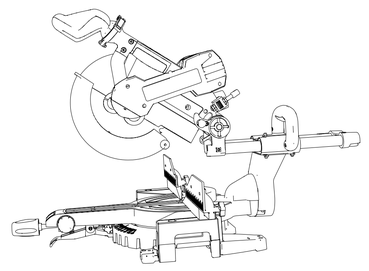

Mitre Saw

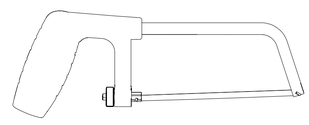

Hacksaw

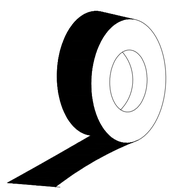

Painter’s Tape

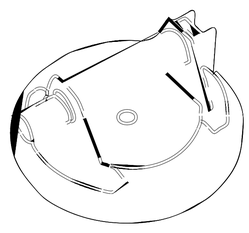

Professional-grade Glass suction cup

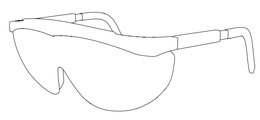

Safety Glasses



Work Gloves



Measure the finished opening before proceeding with the installation to be sure that the correct model size has been ordered.

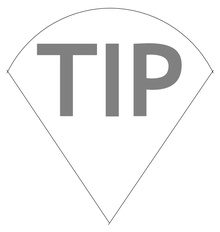

Prior to installation, cover the shower drain with tape to prevent losing screws or small parts.

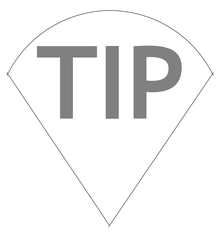

To prevent stripping the screw heads, set screw gun clutch to a low setting when installing screws and bolts.



Unpack your unit carefully and inspect it. Lay it out and identify all parts using the **Detailed Diagram** on **page 4** and parts list in this manual as a reference. Before discarding the carton, check for small hardware bags that may have fallen to the bottom of the box. If any parts are damaged or missing, please contact us for replacement, The shipping boxes may contain extra parts not used in your model configuration.



Retain these installation instructions for future reference.

Detailed Diagram

Spare parts

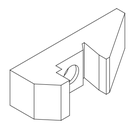

28

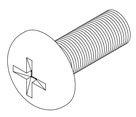

29

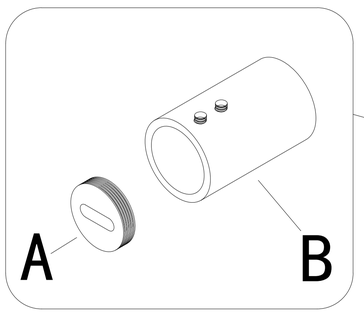

1
2
3
4
5
6
7
8
9
10
11
12
13
27
14
15
16
21
17
18
23
30
24
25
26
19
20
22

PART LIST

Check all parts according to the list before assembly

1 	2 	3 	4 	5 
Ø8 Wall Anchor (2pcs)	**ST5X40 Screw (2pcs)**	**Rail Wall Connector (2pcs)**	**Top Rail (1pc)**	**Soft Closing Mechanism (2pcs)**
6 	7 	8 	9 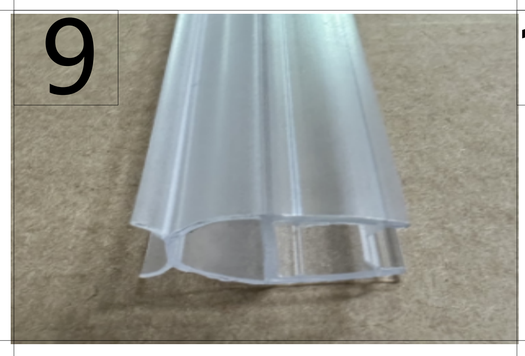	10
Roller Assembly (2pcs)	**Flip-Flop (2pcs)**	**Anti-Jumper (2pcs)**	**Bumper Strip (2pcs)**	**Sliding Panel (1pc)**
11 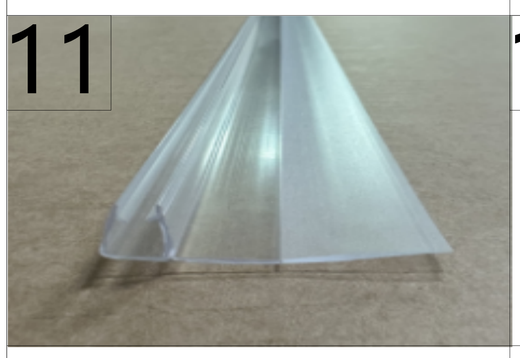	12 	13 	14 	15 
F-form waterproof strip (1pc)	**Handle (1pc)**	**Decoration Cover of Bottom Wall Connecting Part (1pc)**	**Bottom Rail Wall Connecting Part(1 pc)**	**Base Bar (1pc)**
16 	17 	18	19 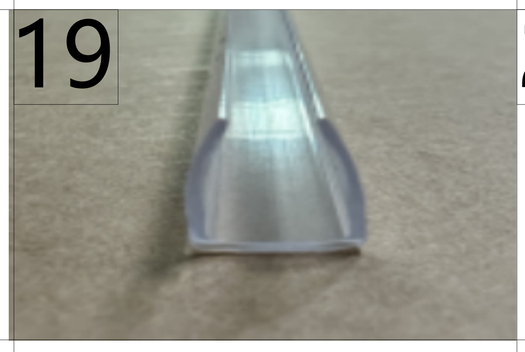	20 
Sliding Block (1pc)	**Pull Rod Fixing Part (2pcs)**	**Fixed Panel (1pc)**	**U-form waterproof strip (1pc)**	**Allen key (5pcs)**
21 	22 	23 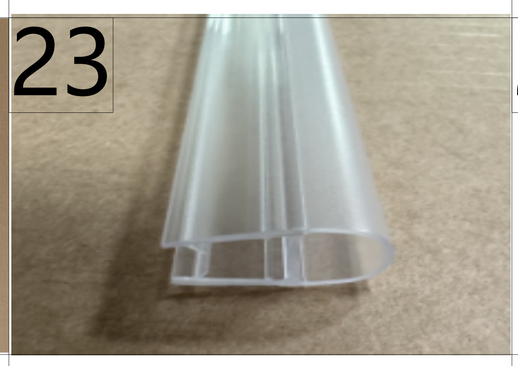	24 	25 
ST4X35 Screw (1pc)	**Template (1pc)**	**Waterproof strip (1pc)**	**Wall connecting clip (1pc)**	**ST4X40 Screw (1pc)**
26 	27 	28 	29 	30 
Ø6 Wall Anchor(4pcs)	**ST4X35 Screw (1pc)**	**buffer clamp (2pcs)**	**M3X7 Screws (2pcs)**	**24 Hole Plugs (1pc)**

* Utilize Safety Glasses and Safety Gloves when constructing this shower door
* We recommend that 2 people work together to complete this installation

STEP 1

Measure the finished opening width.

NOTE

IMPORTANT: Incorrect measurement may prevent proper door closure. Double-check measurement.

Before beginning installation, verify the door assembly will fit within the horizontal opening of the shower enclosure.

Measure distance “W1” of upper shower enclosure opening and distance “W2” of lower shower enclosure opening.

Both measurements should be within the dimensions listed above for required opening widths.

W1 = Upper Enclosure Width
W2 = Lower Enclosure Width

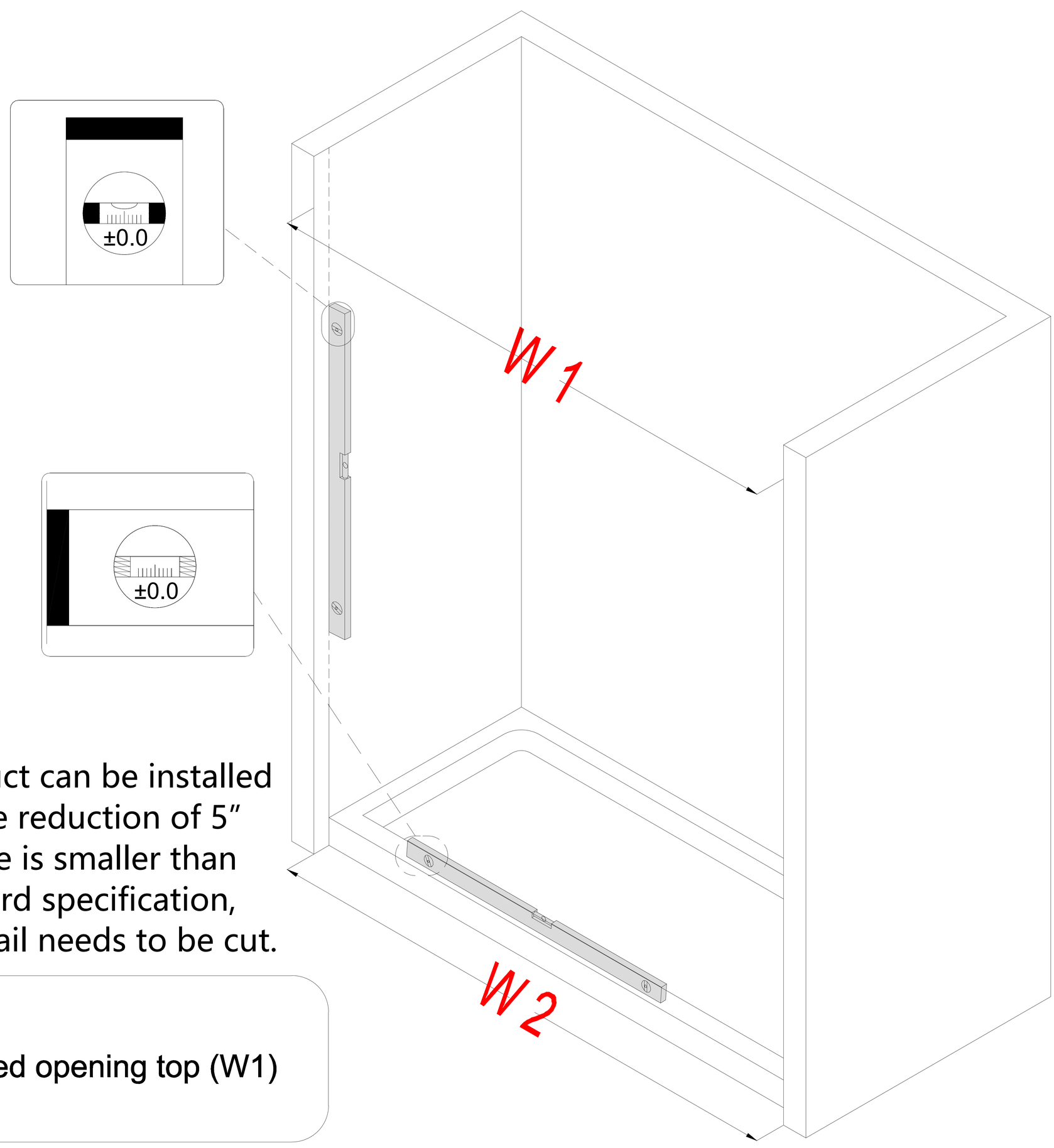

This product can be installed with a size reduction of 5”
If "W1" size is smaller than the standard specification, The Top Rail needs to be cut.

_____ Finished opening top (W1)

STEP 2

Adjust the Soft Closing Mechanism 5

The soft closing mechanism 5 is already installed into the top rail 4 .After determining the actual required installation width on page 5, the soft closing mechanism 5 also needs to be adjusted in position to facilitate subsequent installation!

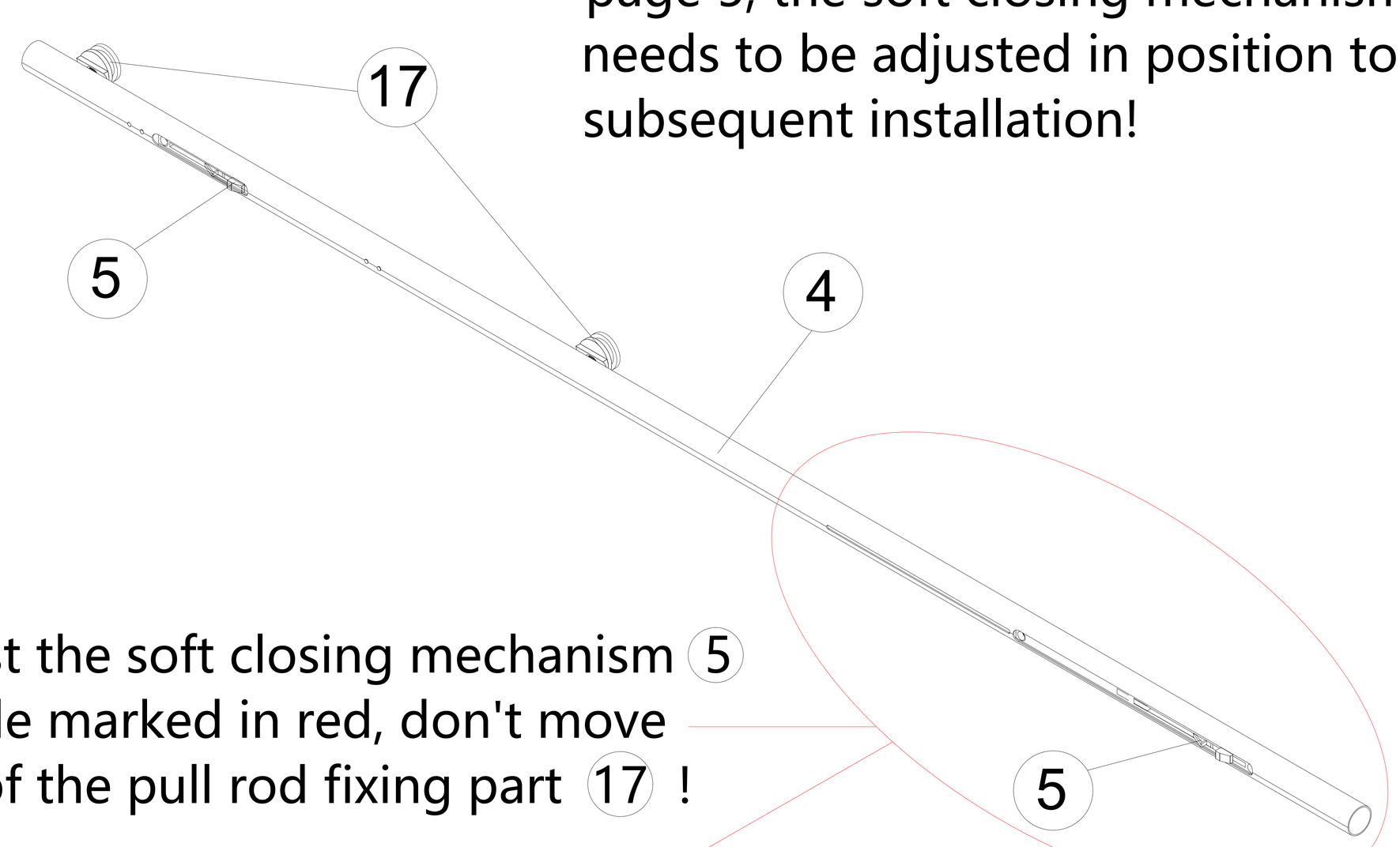

Just adjust the soft closing mechanism 5 on the side marked in red, don't move the side of the pull rod fixing part 17 !

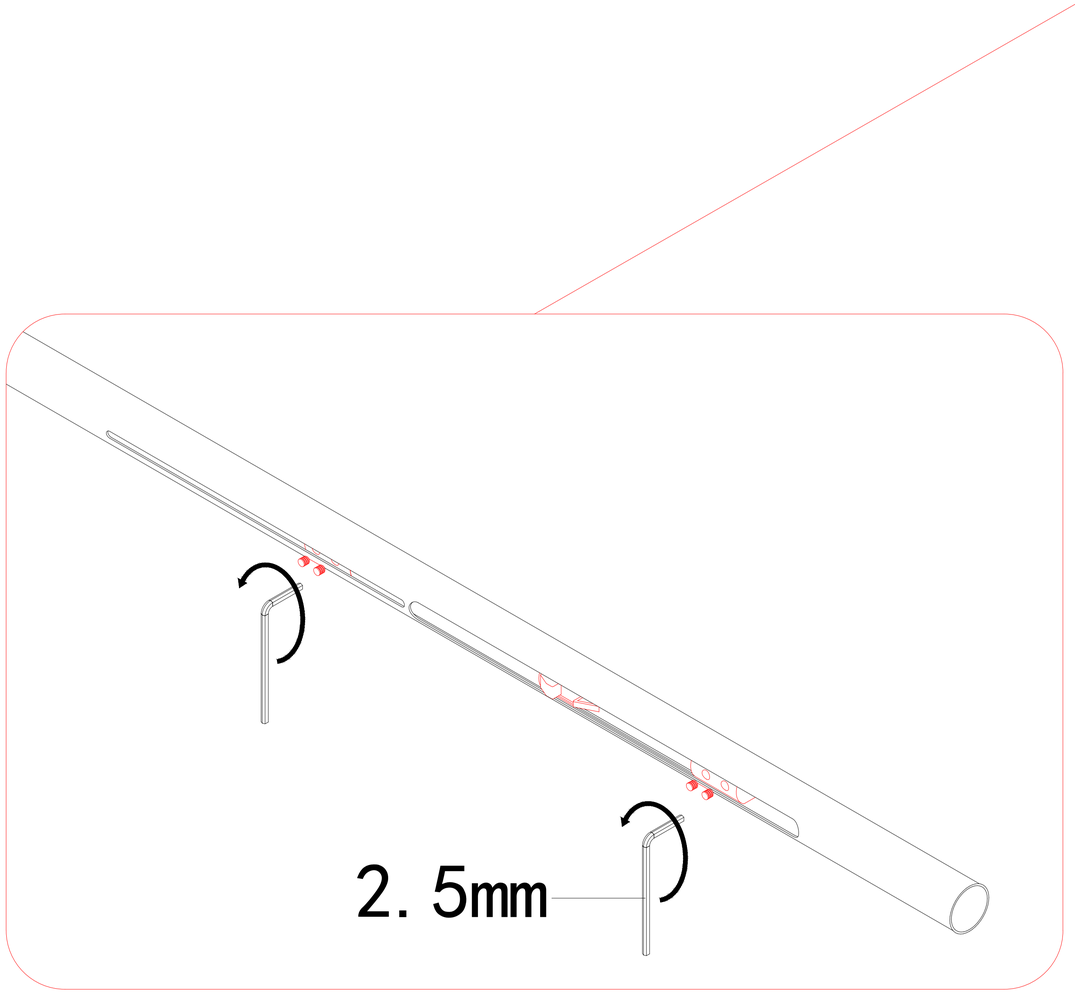

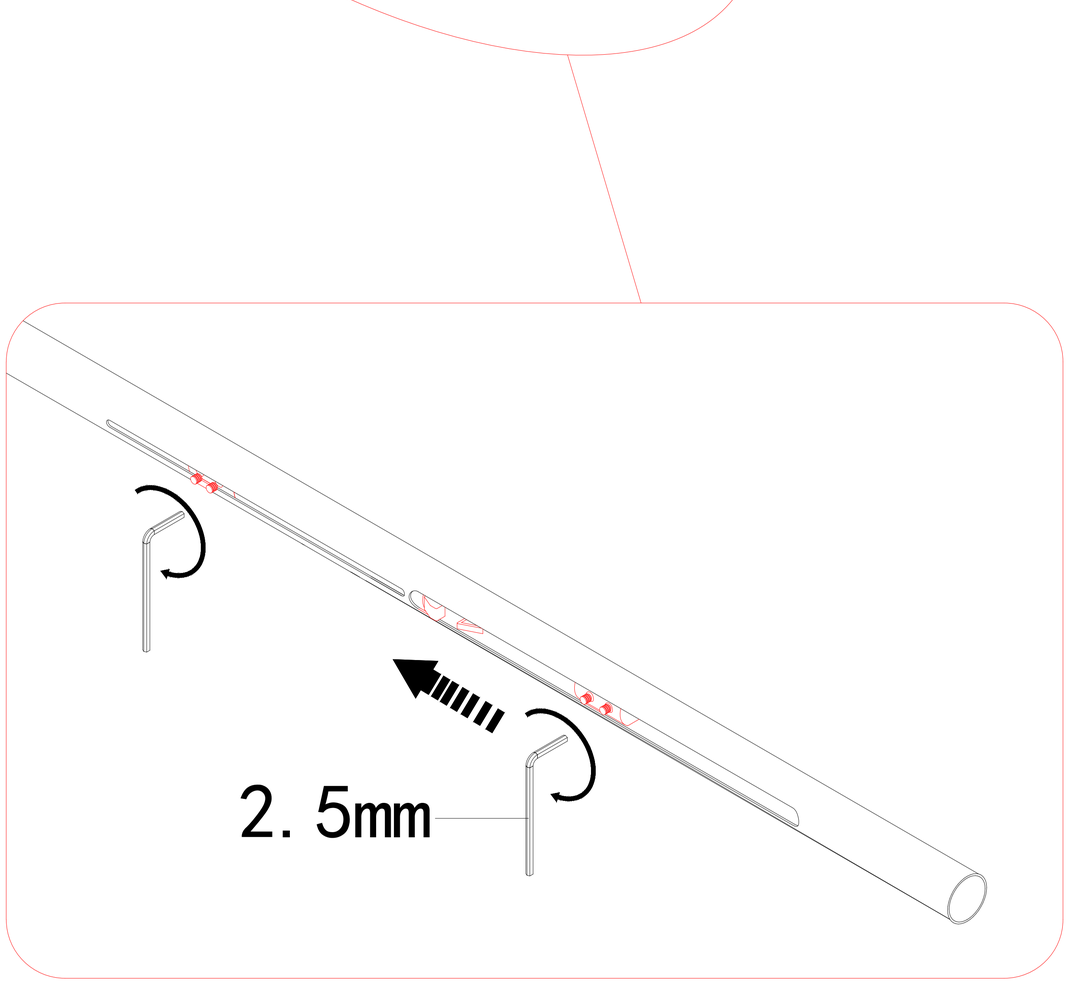

1. Use allen key to to loosen the screws soft closing mechanism 5

2. For example, If you want to shorten the top rail 4 by 1 inch, the soft closing mechanism 5 needs to be moved inward by 1 inch according to the diagram, and then the fixing screws need to be tightened

STEP 3

Cut The Upper Top Rail 4

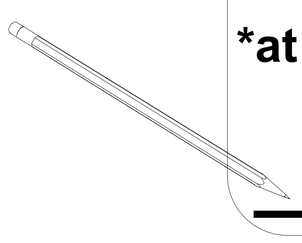

W1
***at model height**

”

(-) 1” =

(L)
***finished cut length**

”

Cut The Upper Top Rail 4 To: “**(L)**”

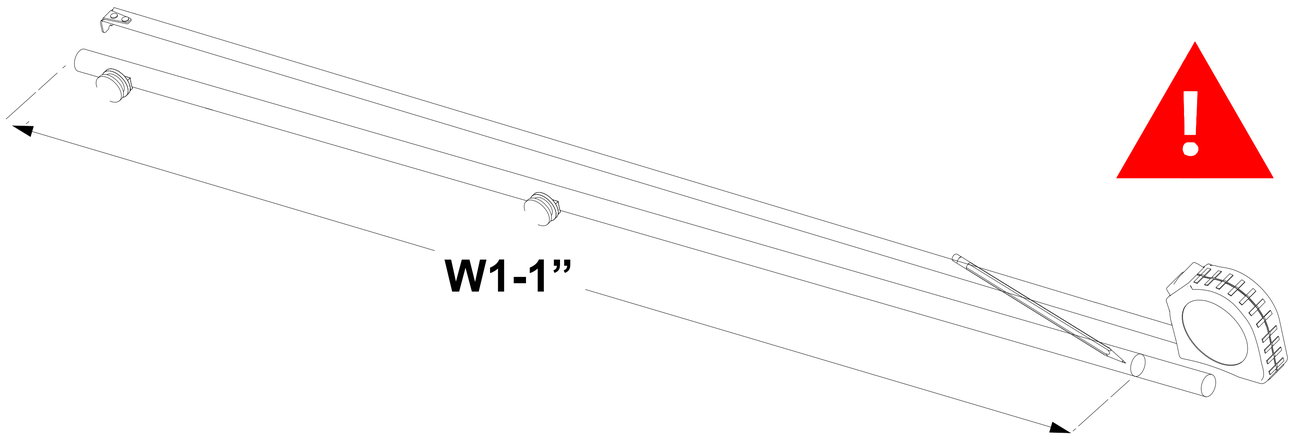

If W1 is smaller than the product specification, the Top Rail 4 needs to be cut to the appropriatesize,
Up to 5 inch can be cut，It cannot be cut from the side of the pull rod fixing part 17

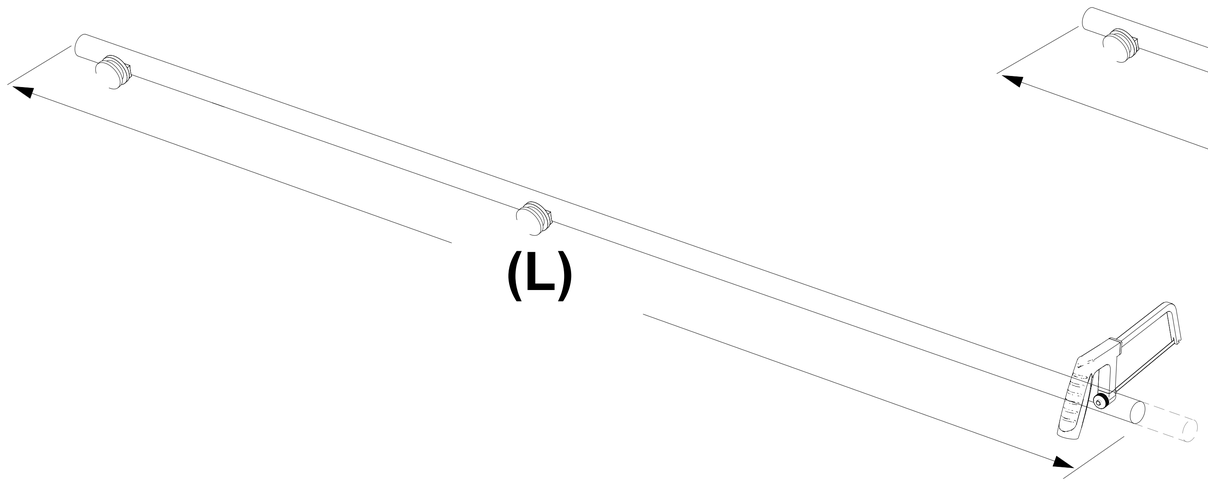

OR

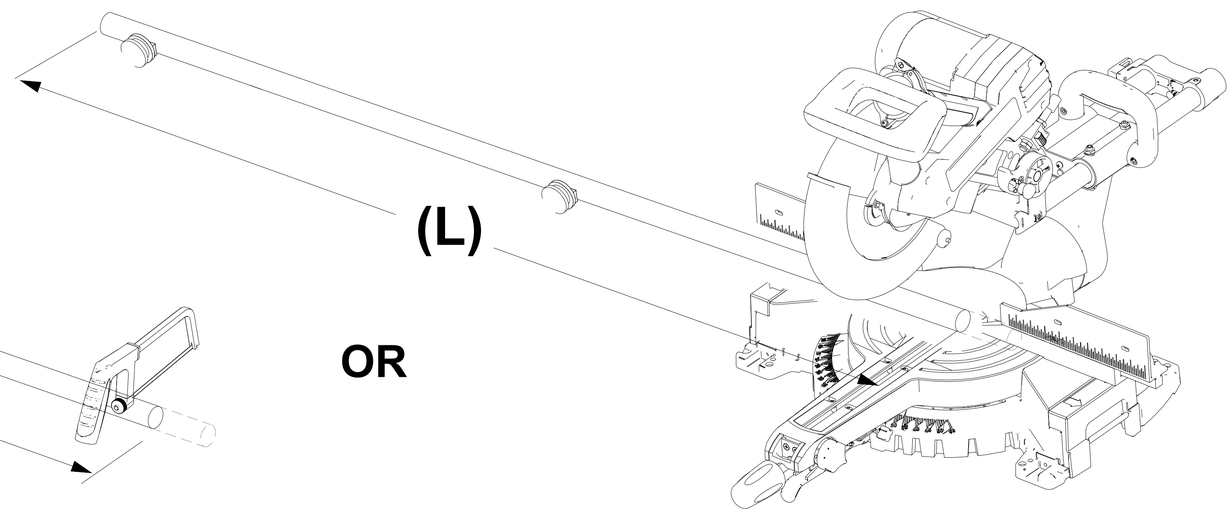

TIP

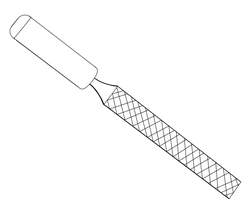

Use a metal file to deburr the cut end

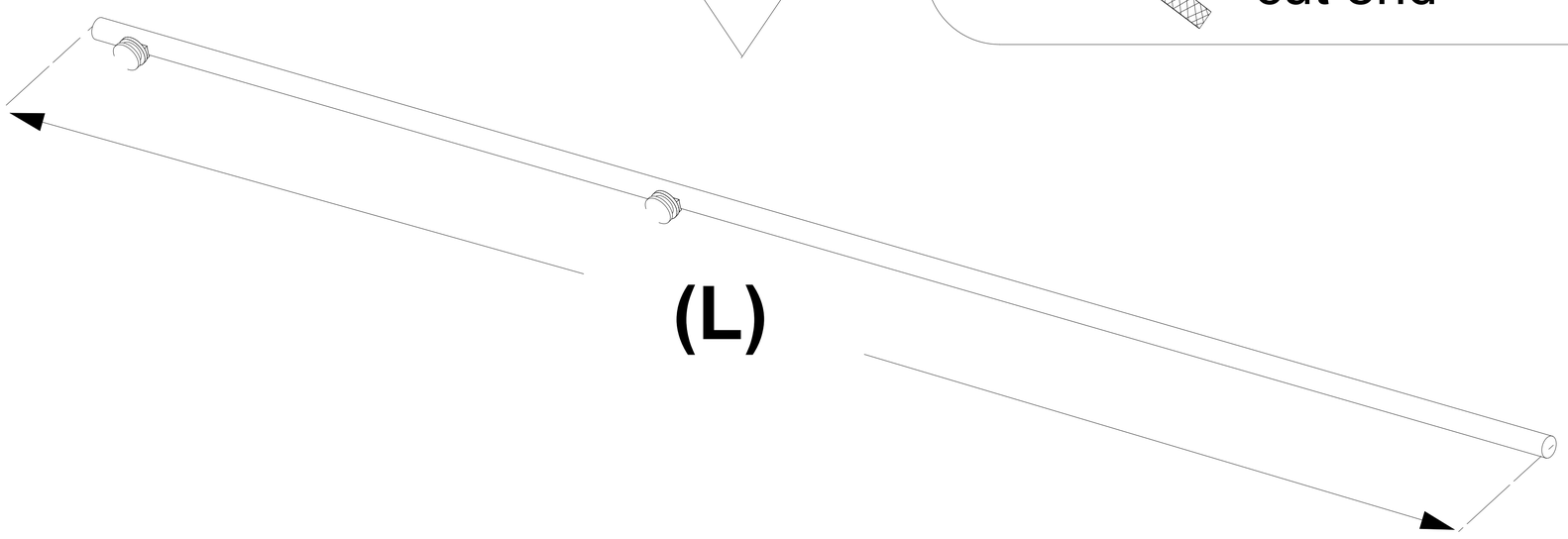

NOTE

The **Top Rail** 4 it **cannot be** cut from the side of the **pull rod fixing part** 17

STEP 4

Locate the installation position of the rail wall connector 3

Pay attention to the orientation of the template

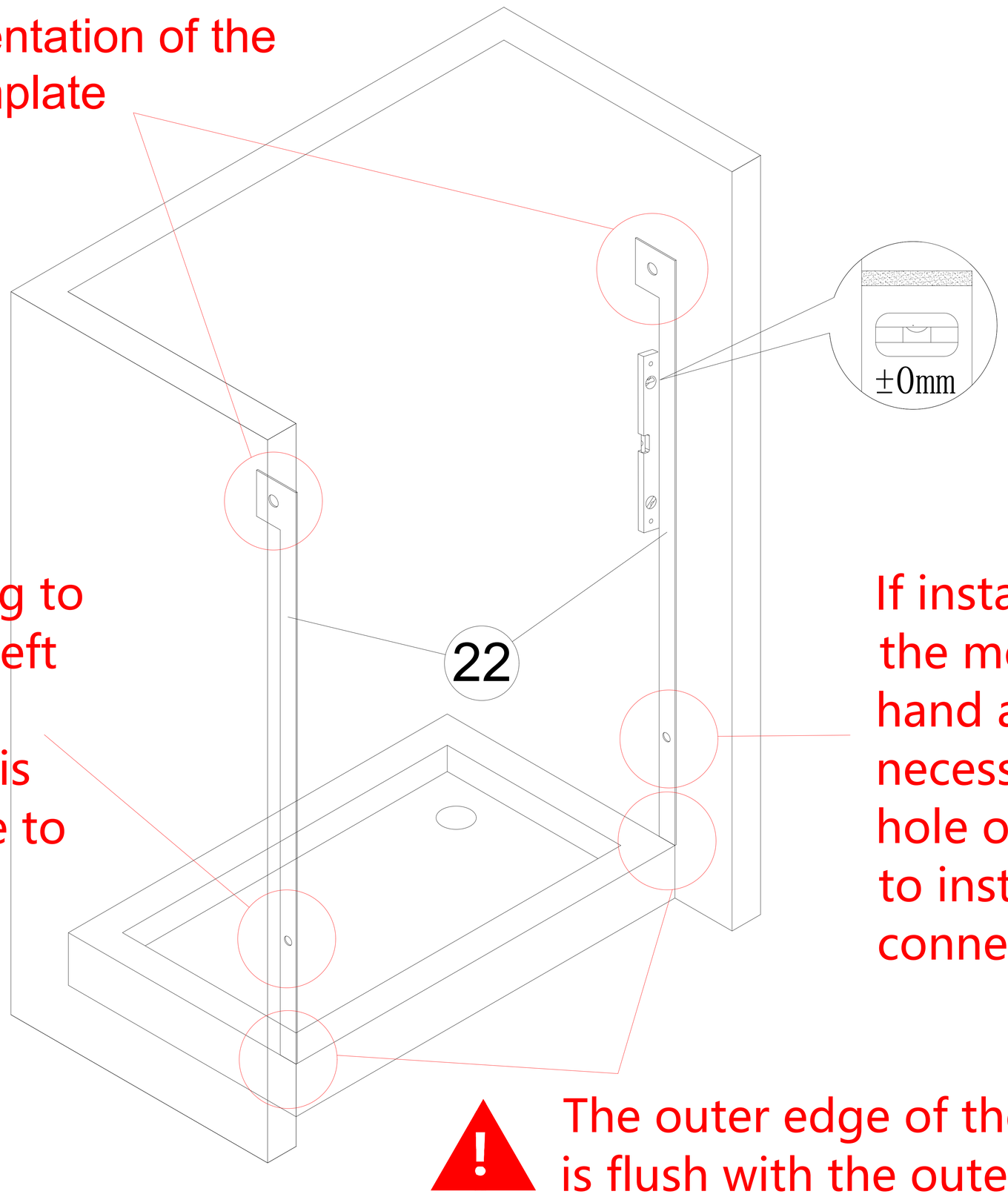

If installed according to the method of the left hand assembly, it is necessary to drill this hole on the left side to install the Wall connecting clip 24

If installed according to the method of the right hand assembly, it is necessary to drill this hole on the right side to install the Wall connecting clip 24

The outer edge of the Template is flush with the outer edge of the stone foundation



1.Lean the template on the wall.



2.Make sure to level the template.

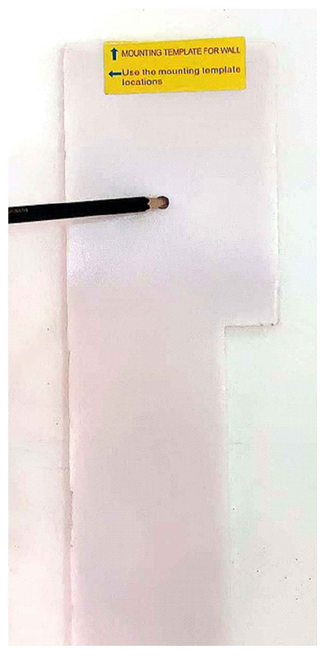

3.Use pencil to mark the hole



4.Drill a hole at the mark location.

STEP 5

Install rail wall connector (3-A)

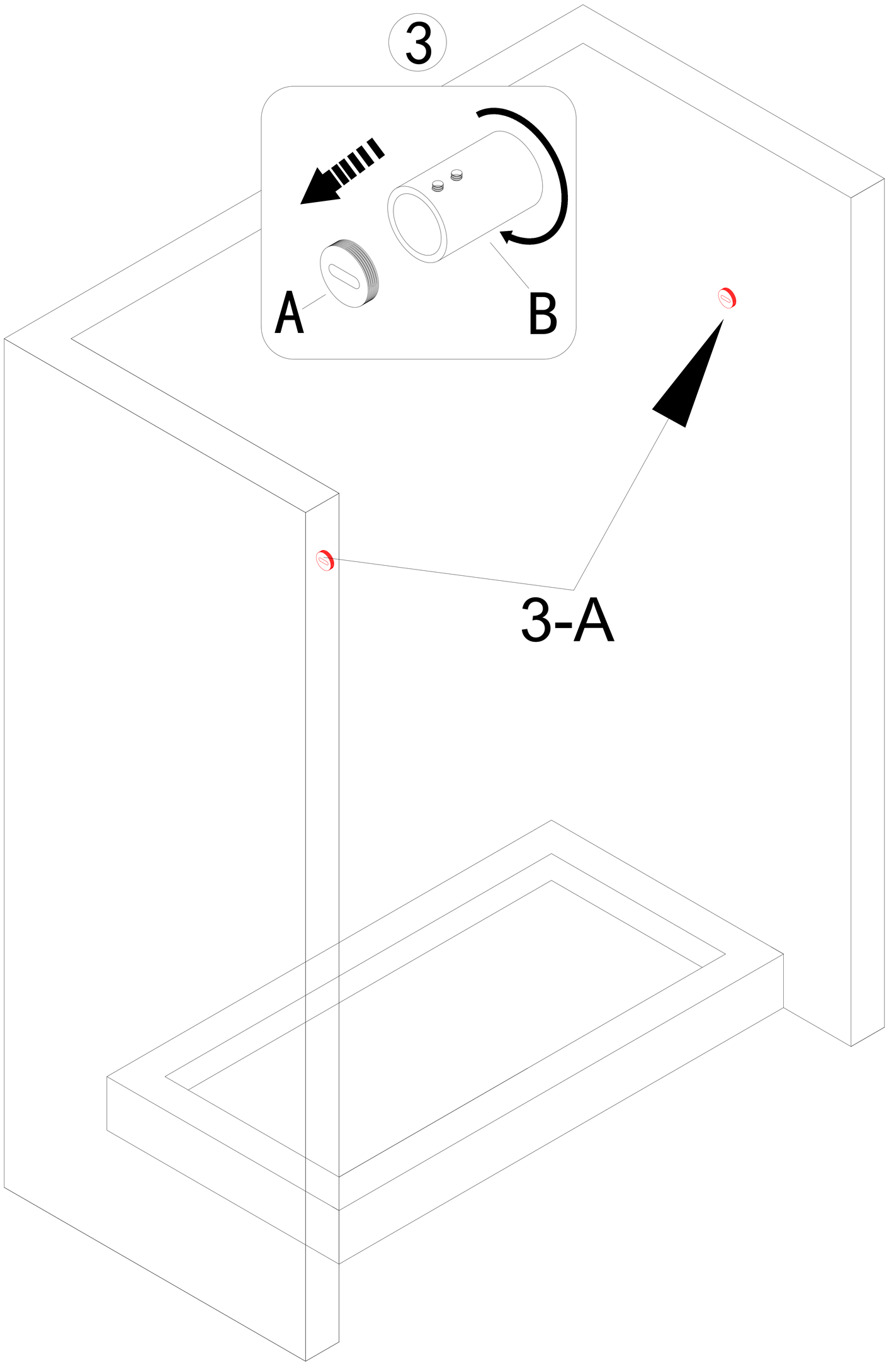

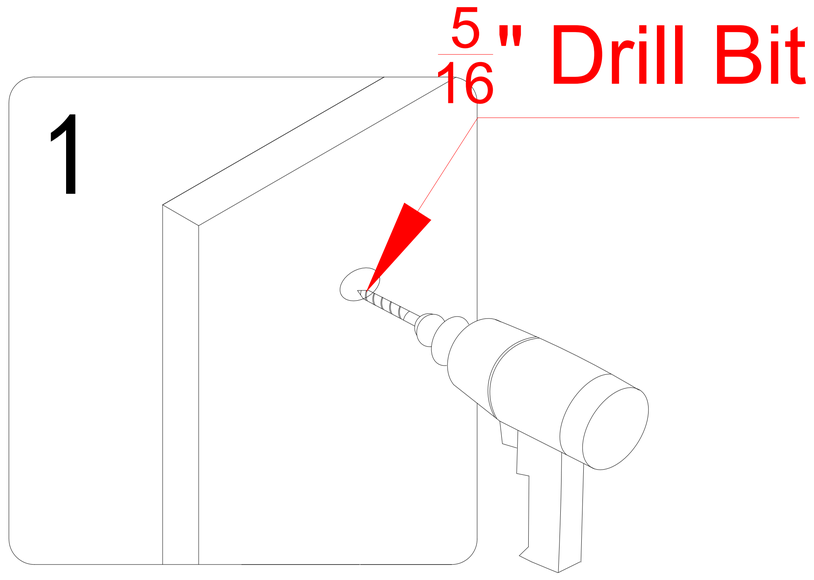

1. Drill a hole on the wall.

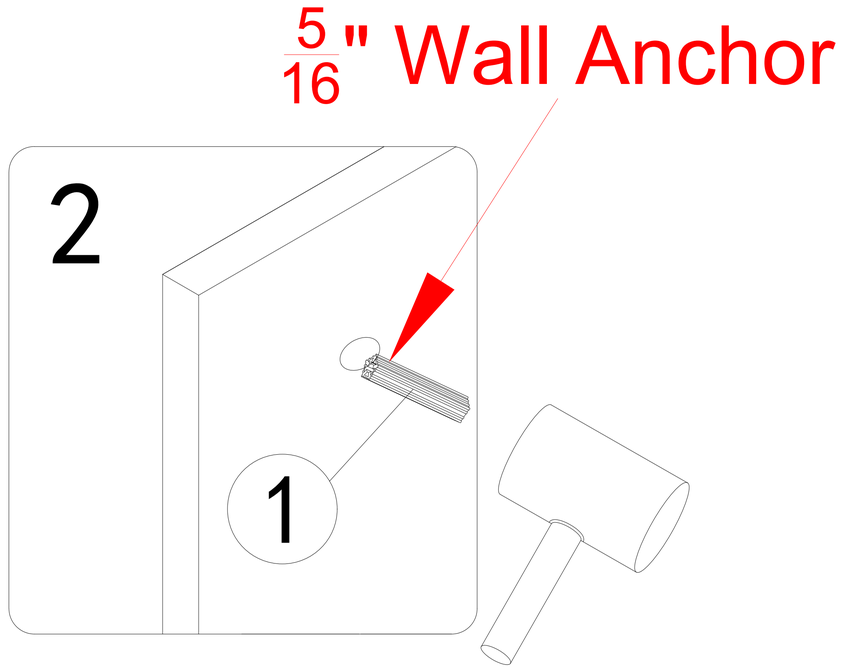

2. Hammer the Ø8 Wall Anchor (1) into the hole.

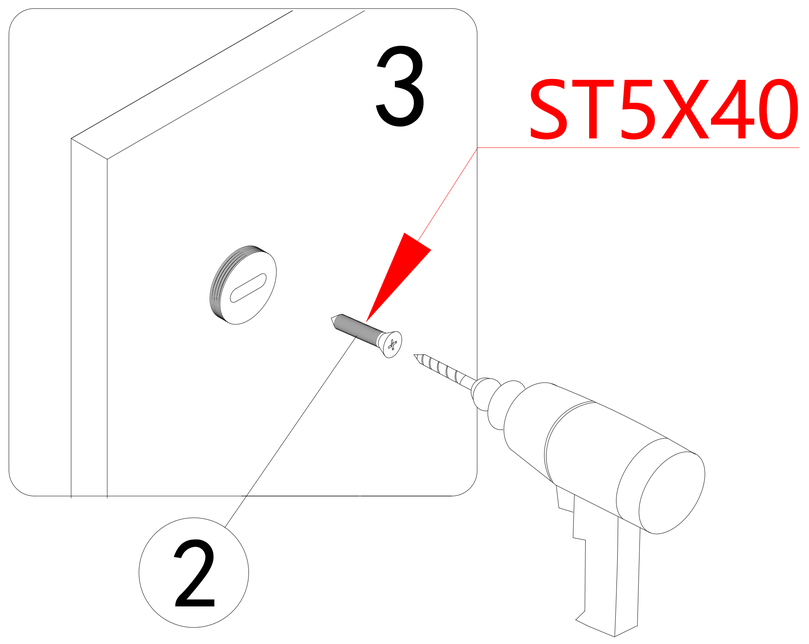

3. Secure Wall Connector (3-A) onto the wall.

STEP 6-1

(Left Hand Assembly)

Preparation work before installing the Fixed Panel 18

1. Use the Allen key to loosen the outer shell and remove it.

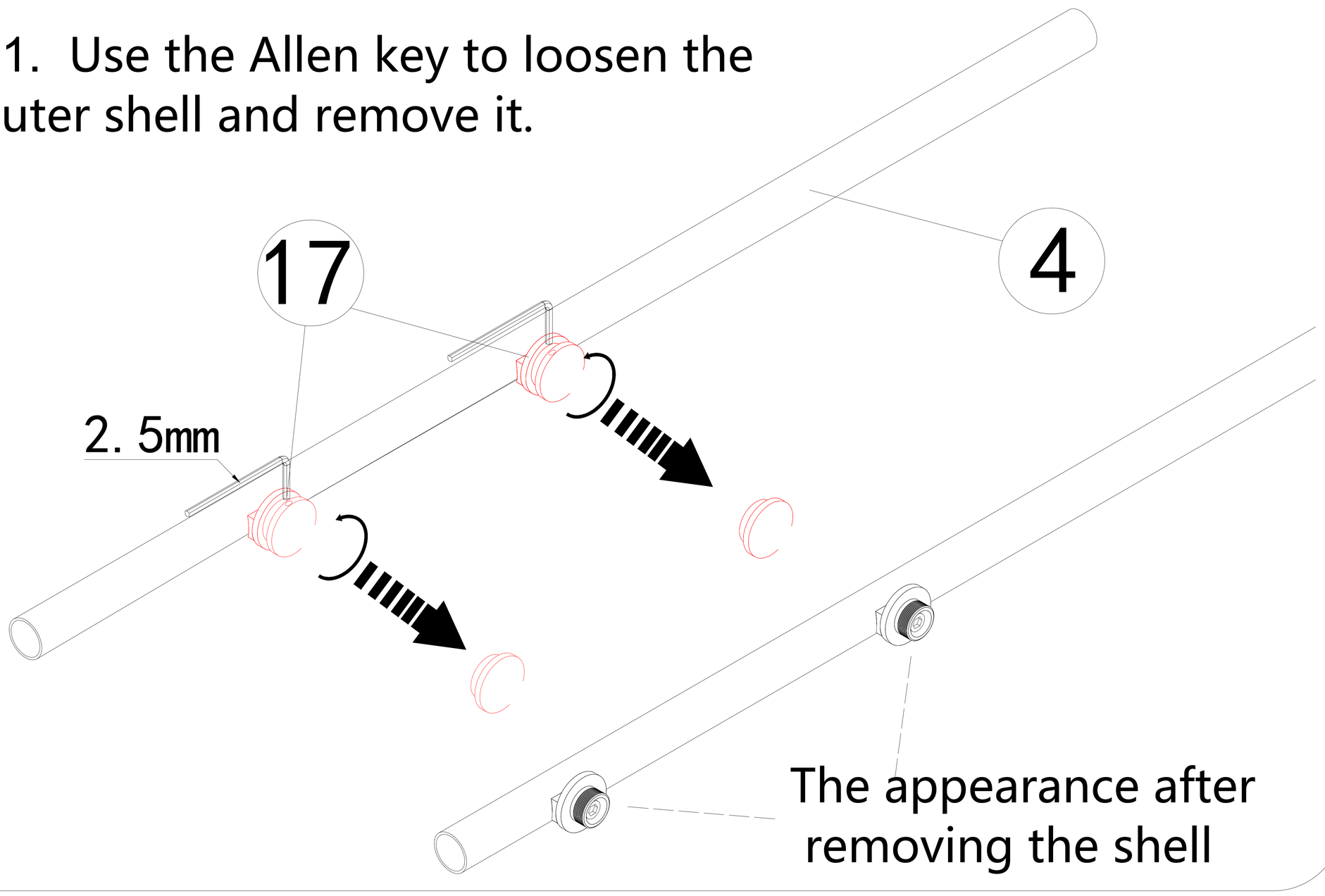

STEP 6-2

(Left Hand Assembly)

Preparation work before installing the Top Rail 4

1. Insert the Rail Wall Connector (3-B) into the two sides of pull rod.
2. Utilize the 2.5mm Allen key to tighten the screw inside.

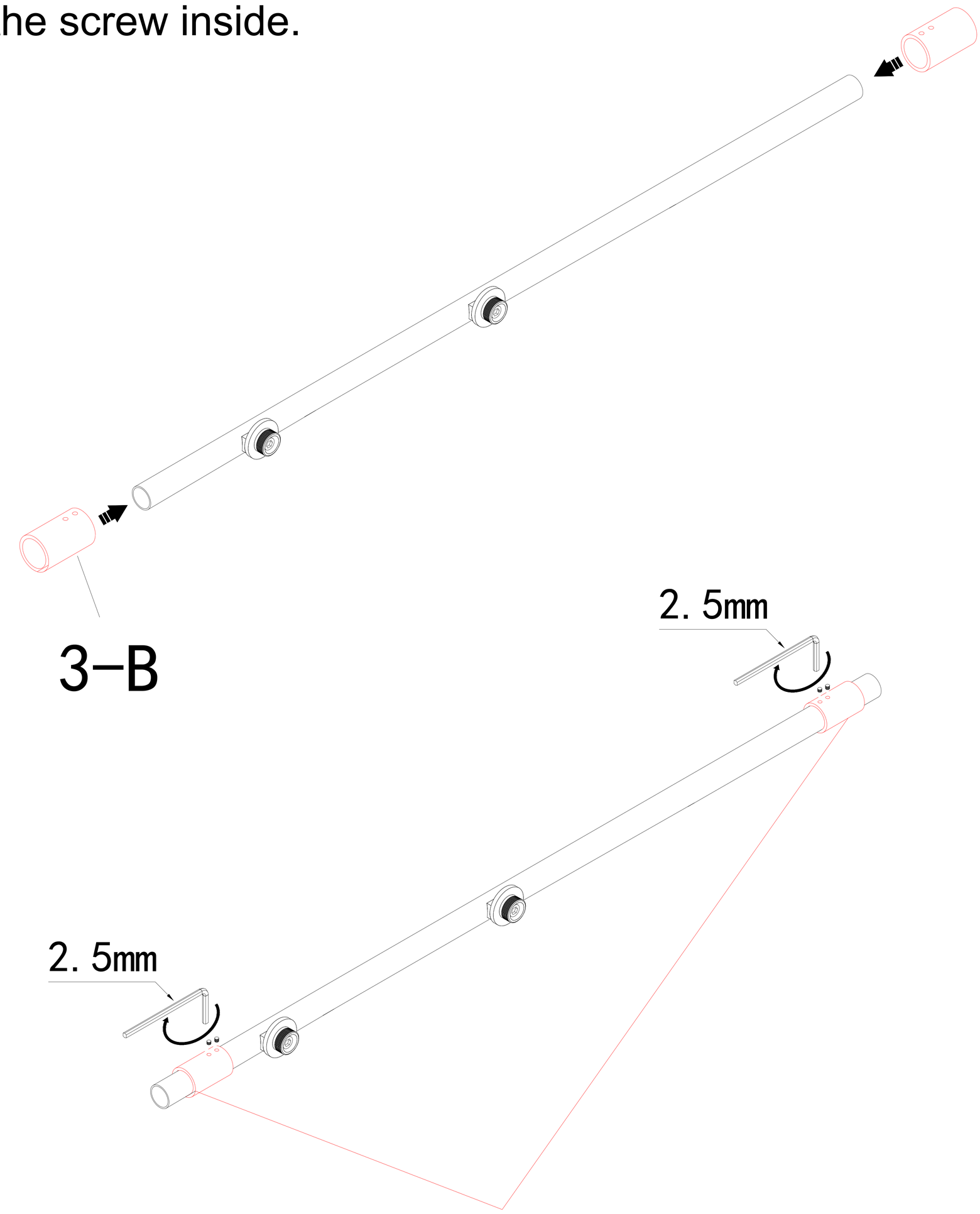

(Don't tighten it too tightly, as long as the part can't move)

STEP 6-3

(Left Hand Assembly)

Install the roller assembly 6 on the sliding panel 10

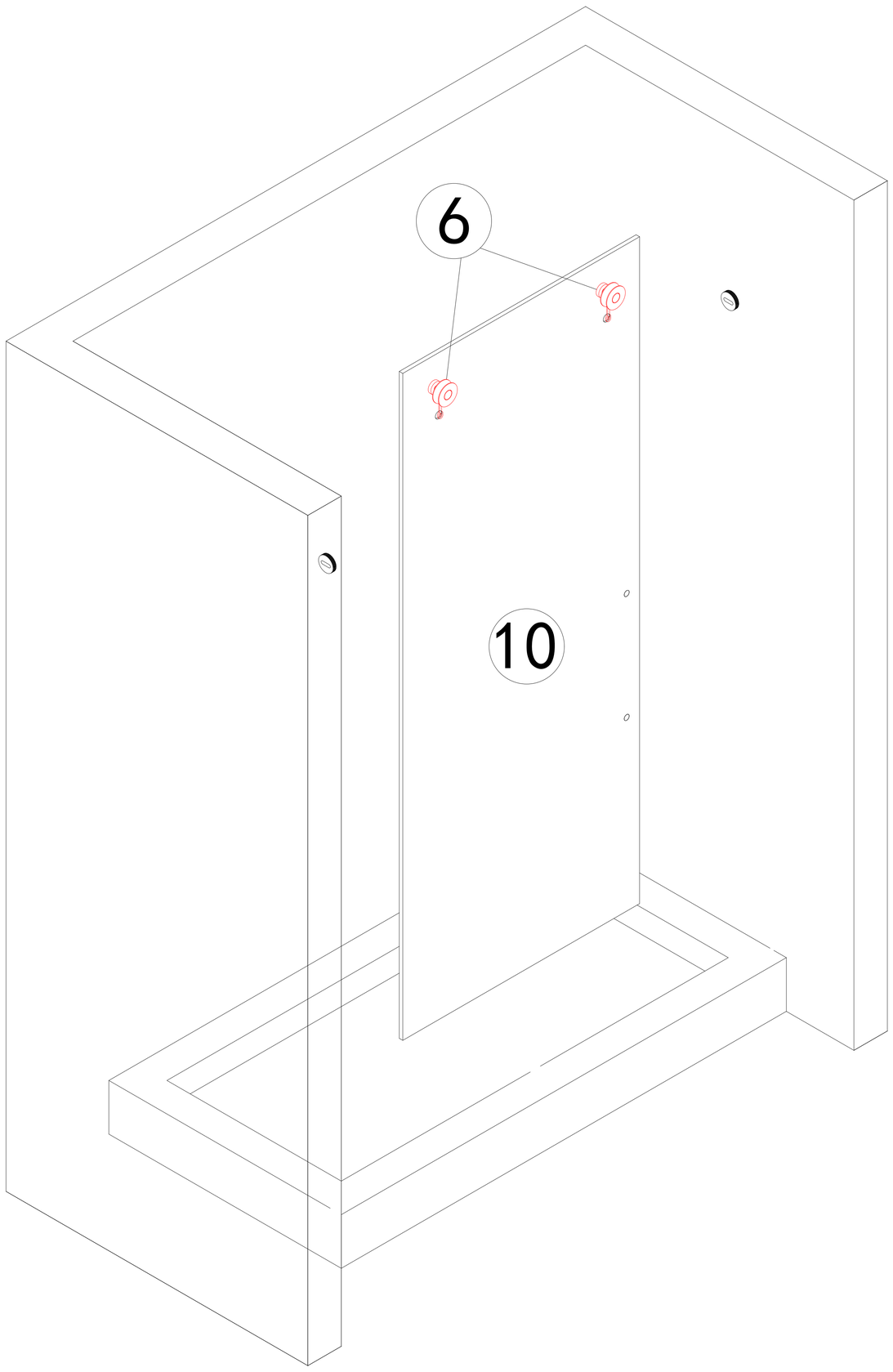

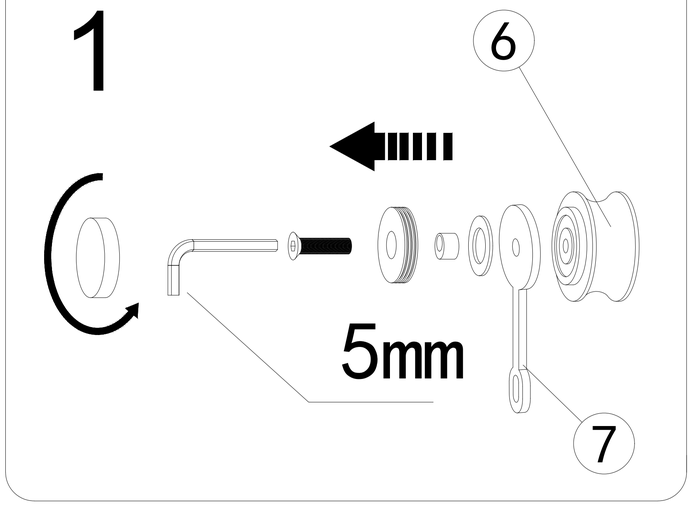

1. Disassemble the roller assembly 6 as shown, unscrew the cover and loosen the big bolt.

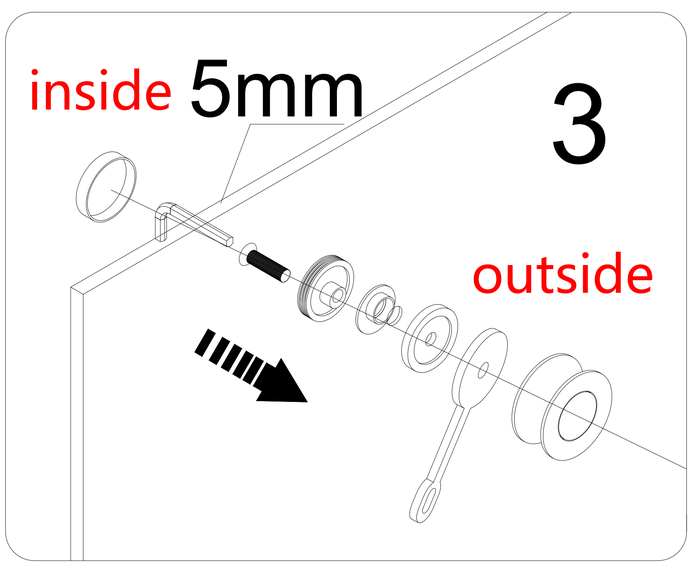

2. Reassemble the two roller assembly 6 onto the sliding panel 10 as shown in the picture. When finished, move the sliding panel 10 to the shower area.

Move the active panel to the shower area.
Lay the glass on a soft padded surface!



Note:The active glass is double-sided nano , can be freely installed.

STEP 6-4

(Left Hand Assembly)

Install the top rail ④ on the rail wall connector ③

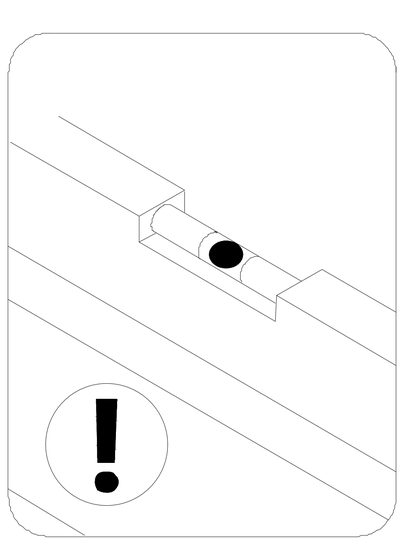

Threshold must be level

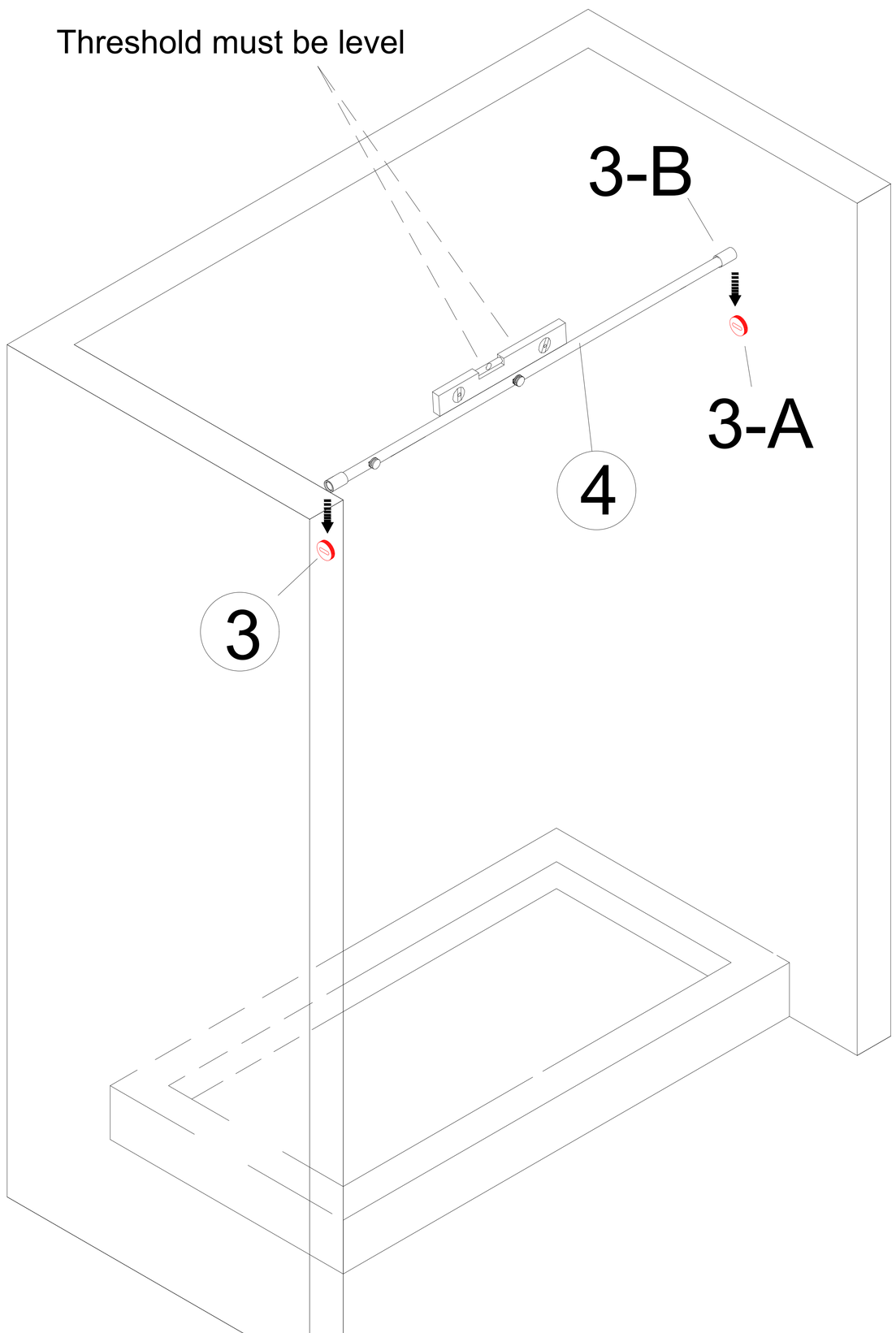

1.Screwing the rod and Wall Connector (3-B)in the Wall Connector(3-A).
2.Tightening by 2.5mm Allen Wrench.

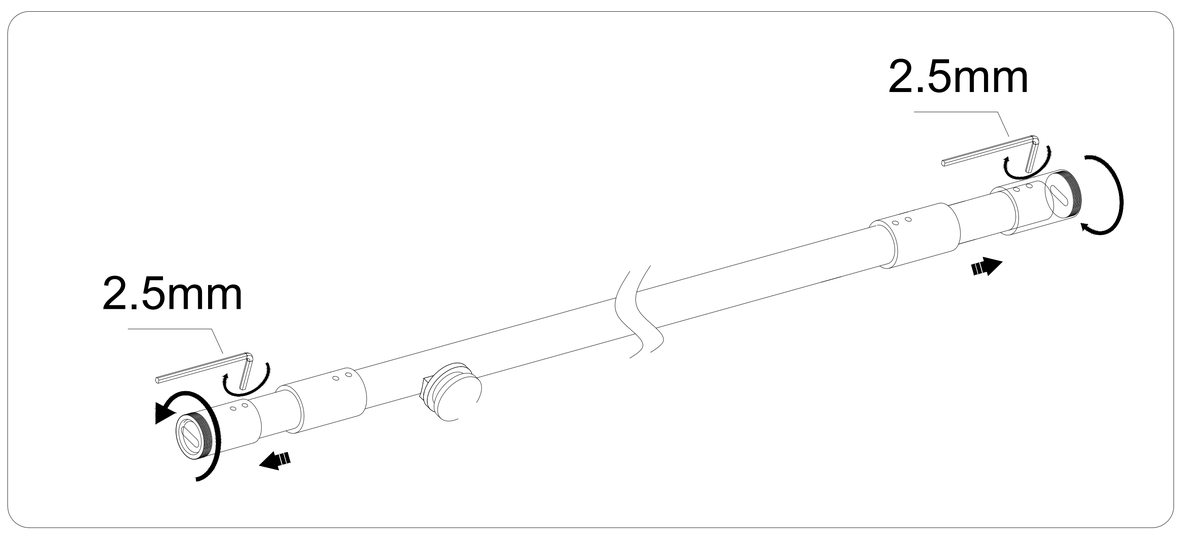

STEP 6-5

(Left Hand Assembly)

Install the Waterproof strip (23) and U-form waterproof strip (19) on the Fixed Panel (18)

After installation, please place the glass on a soft ground!

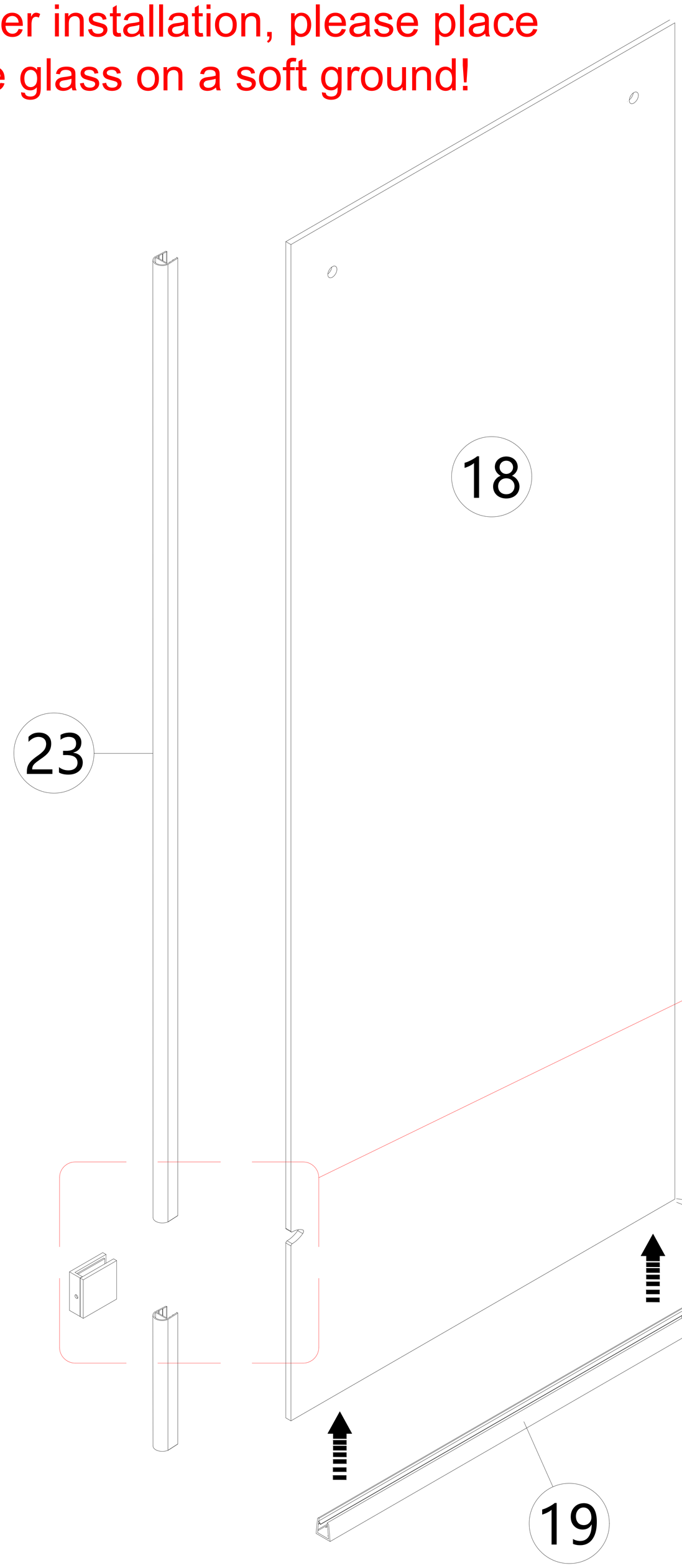

Note:the Waterproof strip (23) needs to be cut according to the position of the Wall connecting clip (24) otherwise it will affect the installation!

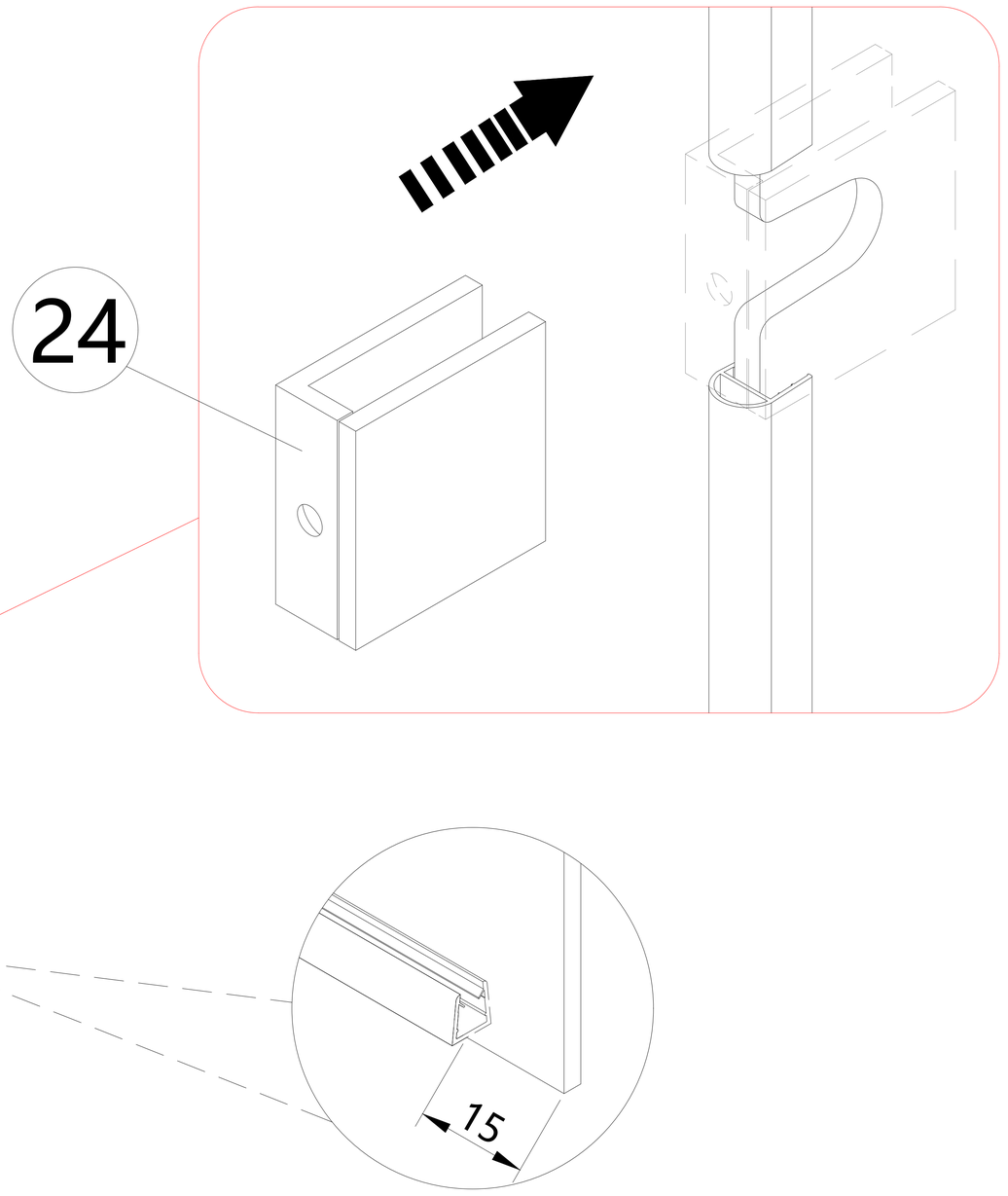

The waterproot strip is 15mm away from outside of the galss.

STEP 6-6

(Left Hand Assembly)

Preparation work before installing the Wall connecting clip 24

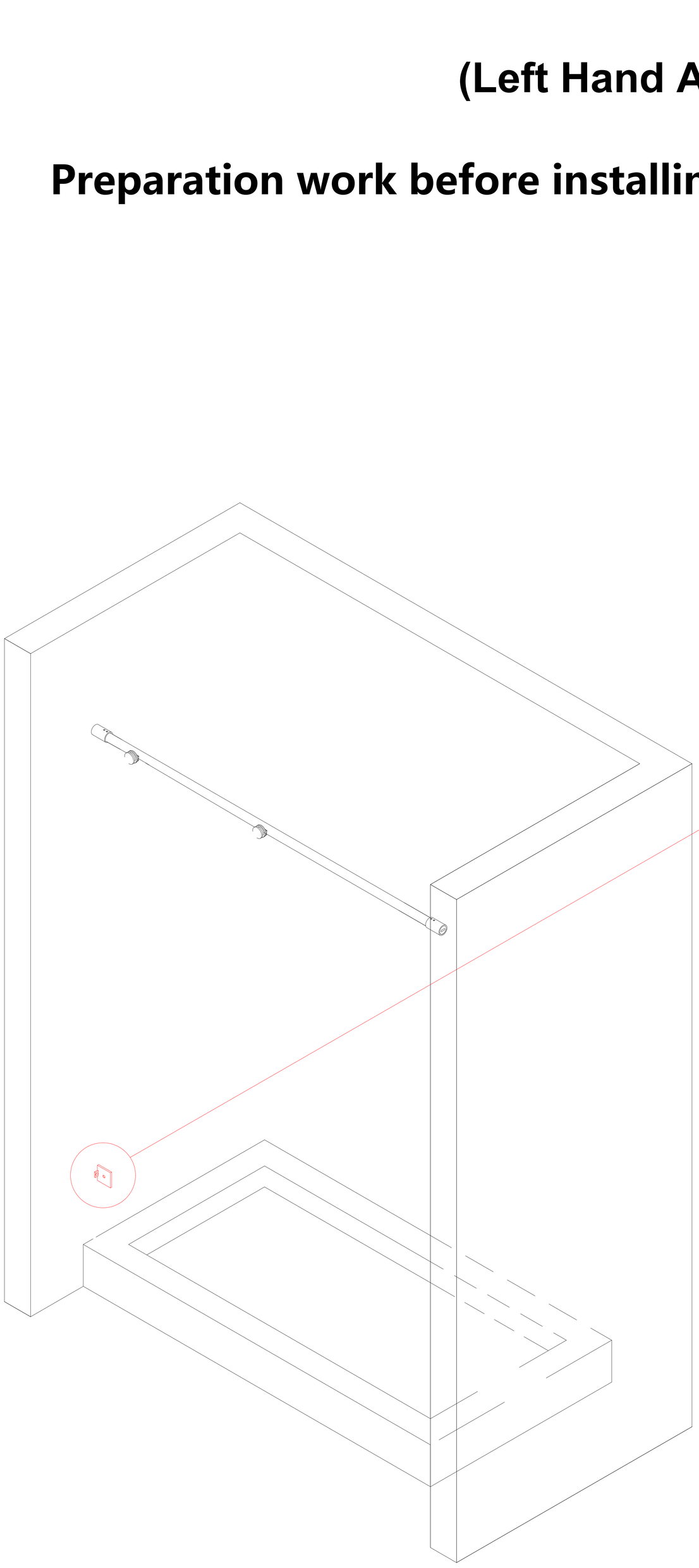

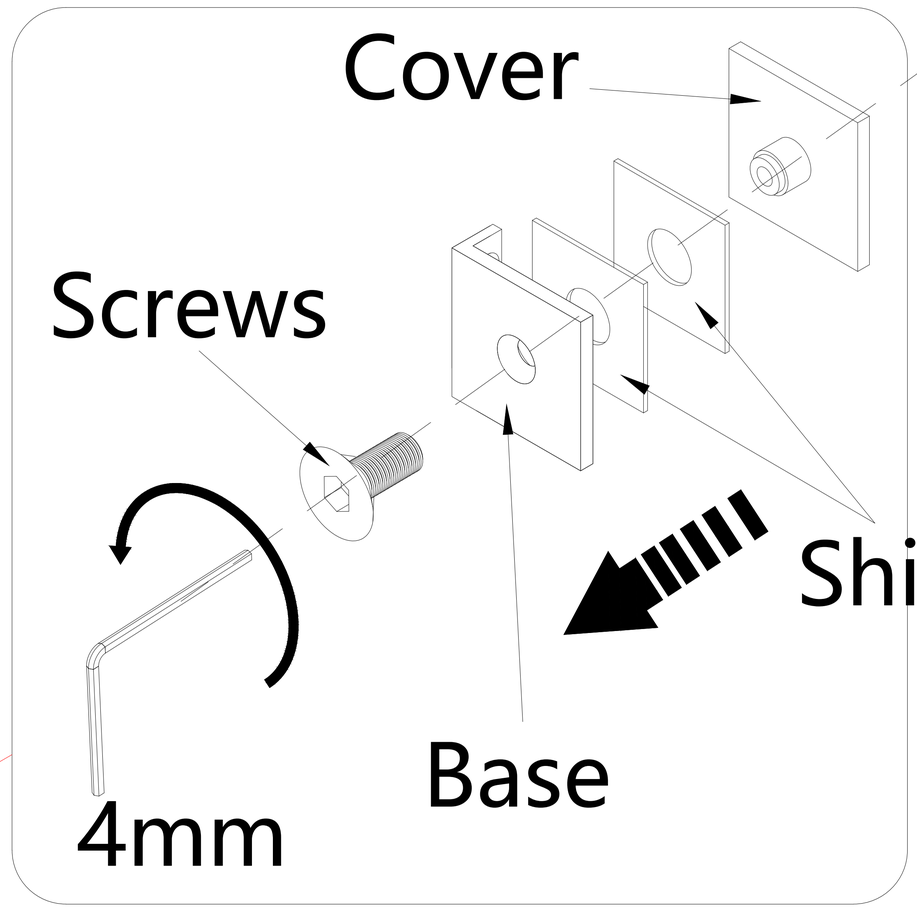

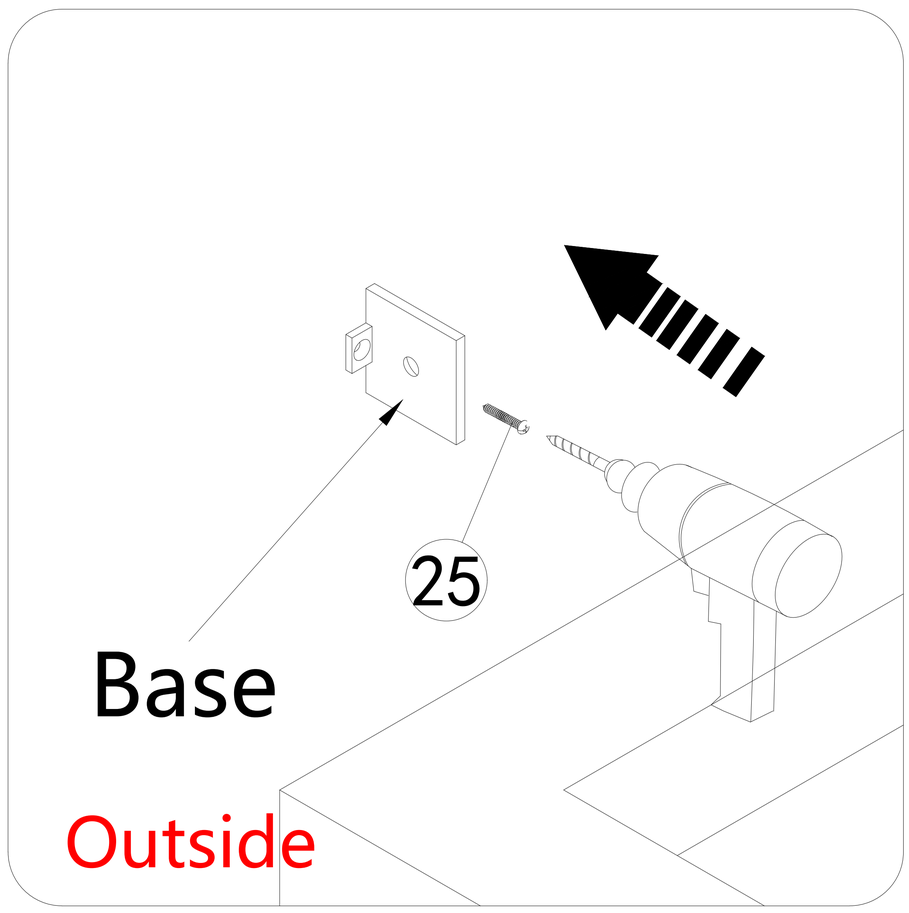

First, disassemble the Wall connecting clip 24 , and then use ST4X40 screws 25 to align the base with the page 8 drilled hole for installation.

STEP 6-7

(Left Hand Assembly)

Install the fixed panel 18 on the top rail 4

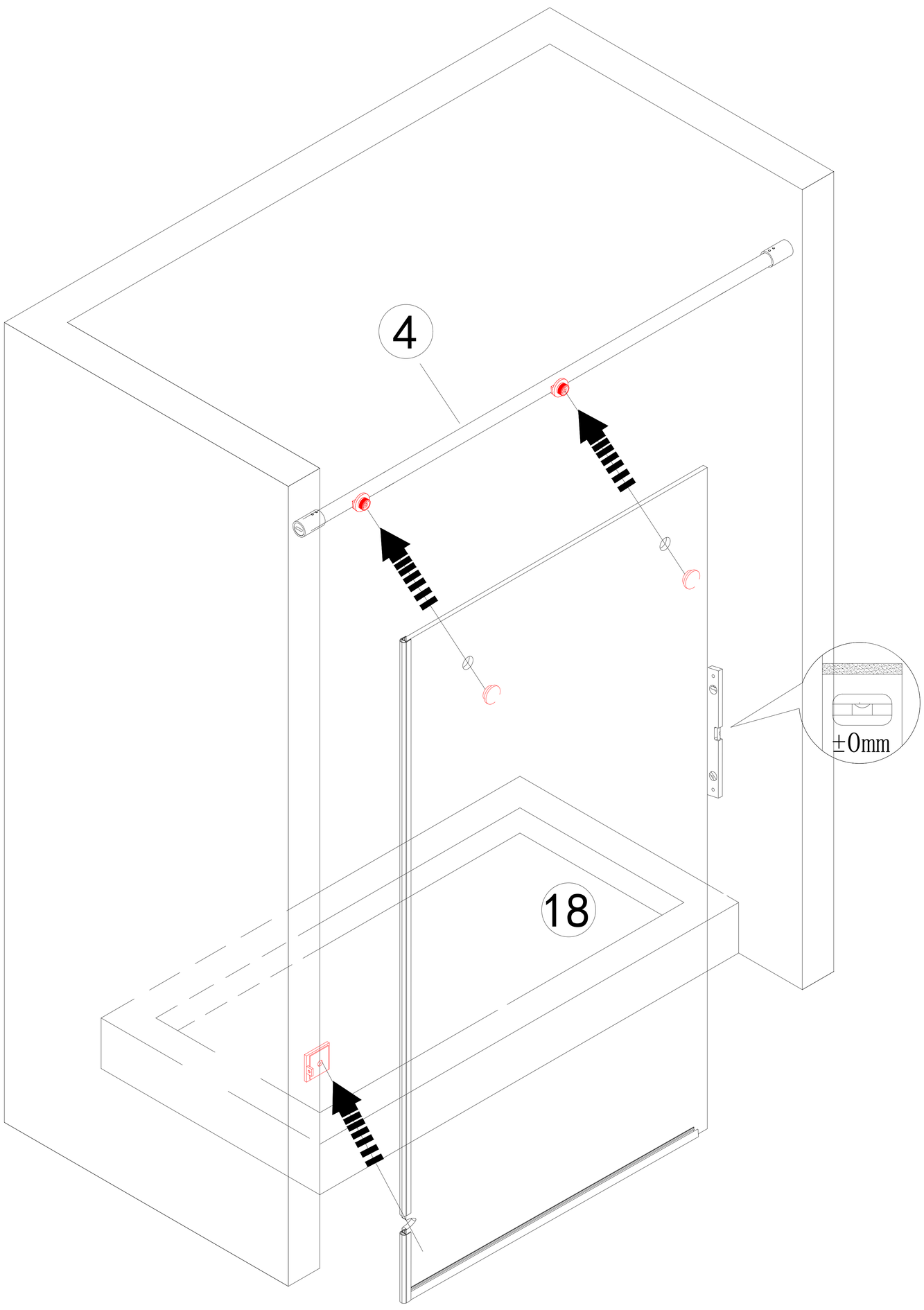

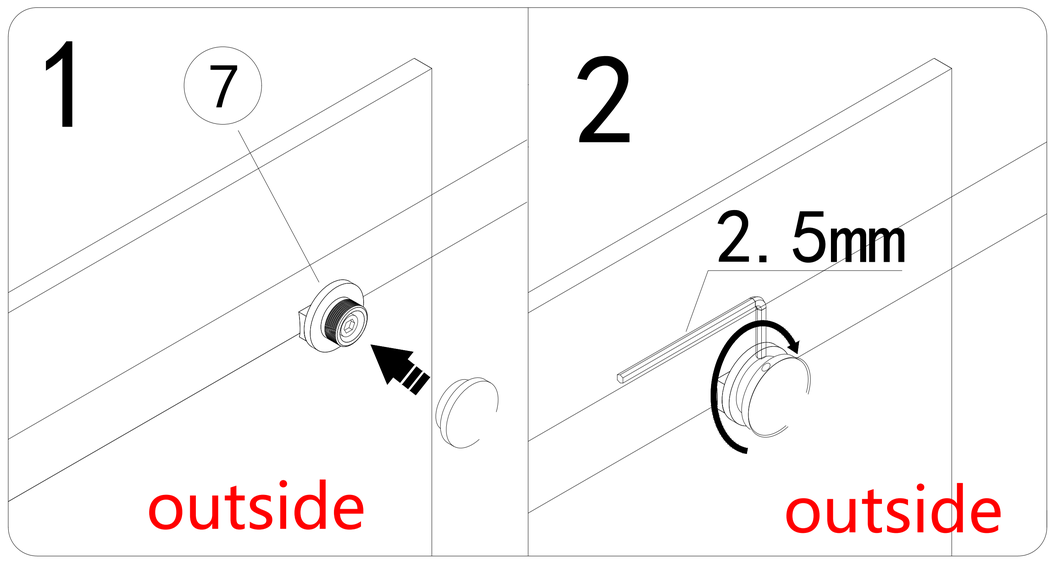

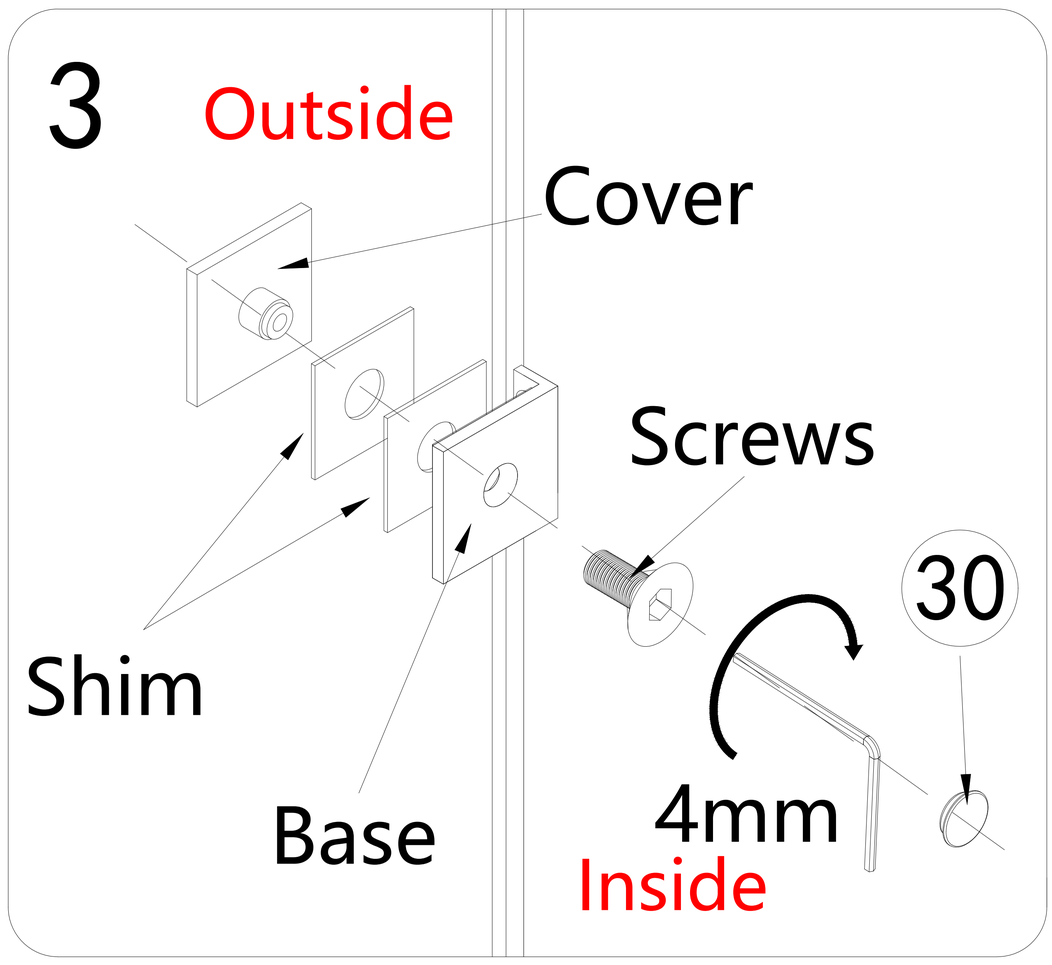



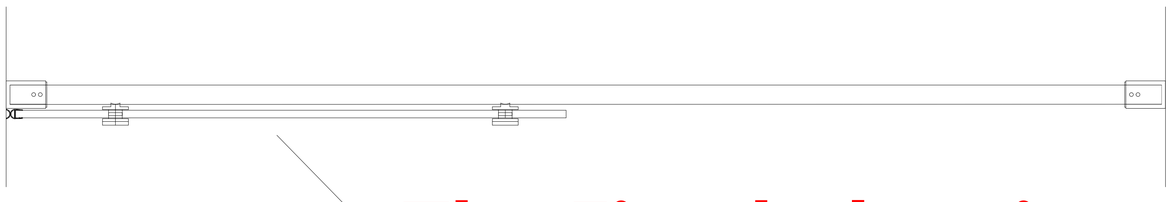

The Fixed glass is installed on the outside of the shower room

Note:The fixed glass is double-sided nano , can be freely installed.

STEP 6-8

(Left Hand Assembly)

Install the sliding block 16

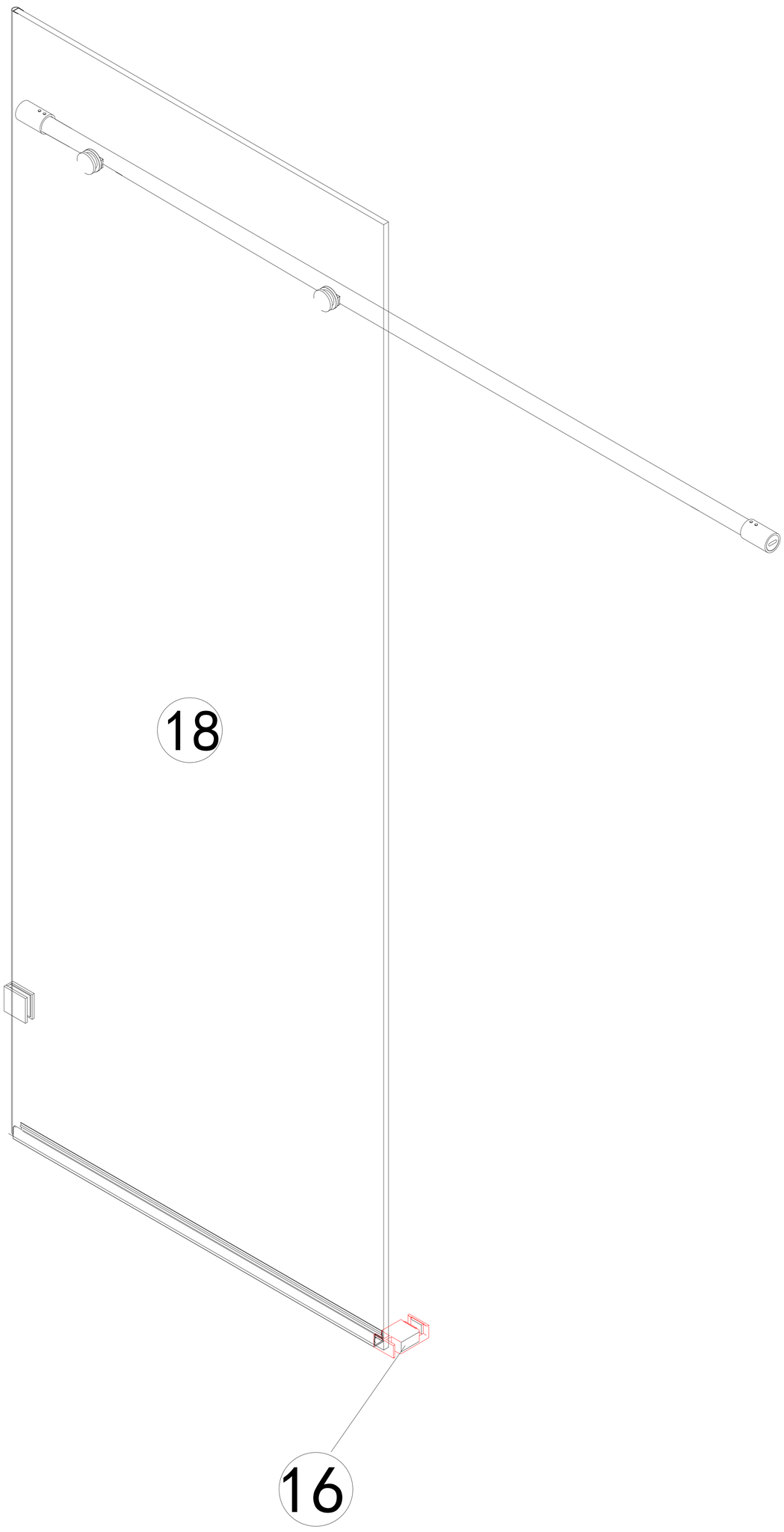

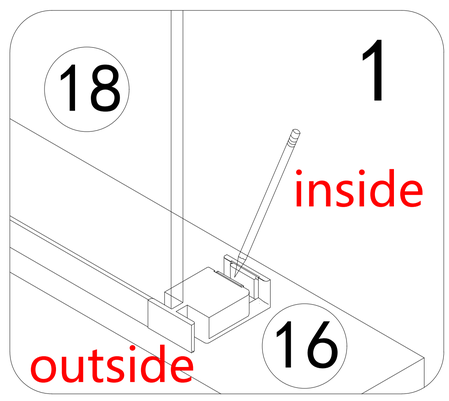

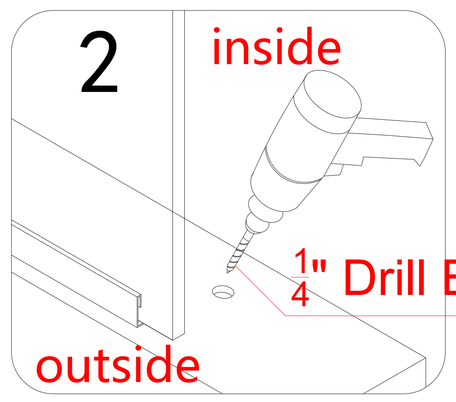

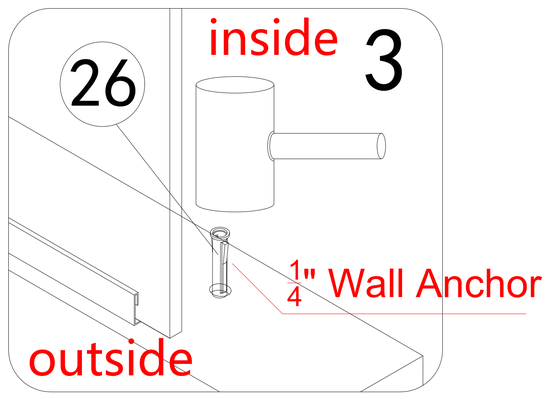

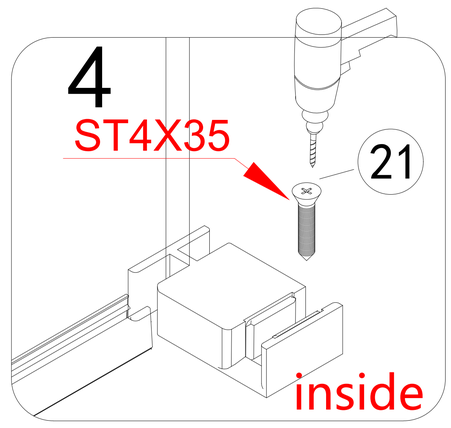

1.Insert the sliding block (16) under the Fixed Panel (18) side and mark it.
2 .Drill ∅ 1/4"(6.4mm) holes.
3. Inject Ø6 Wall Anchor (26) into the hole;
4. Secure the sliding block (16) with ST4X35 screws (21).

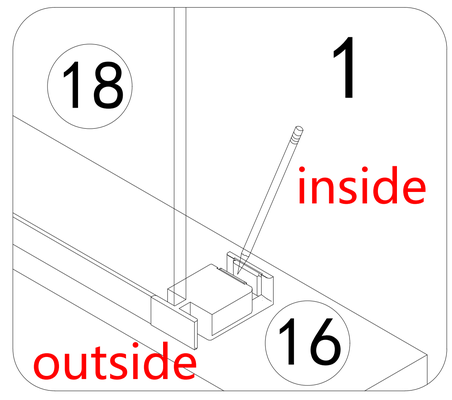

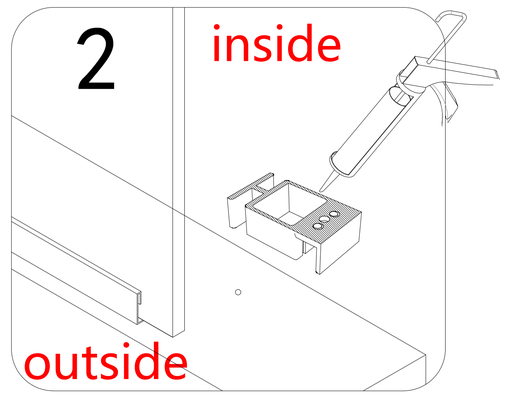

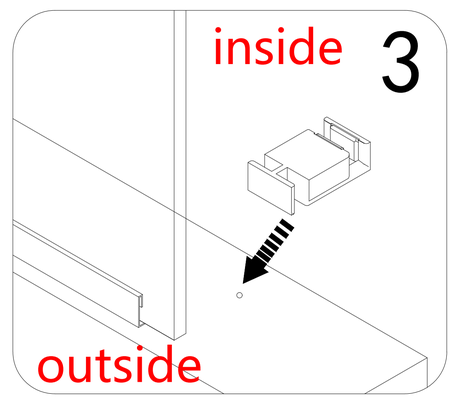

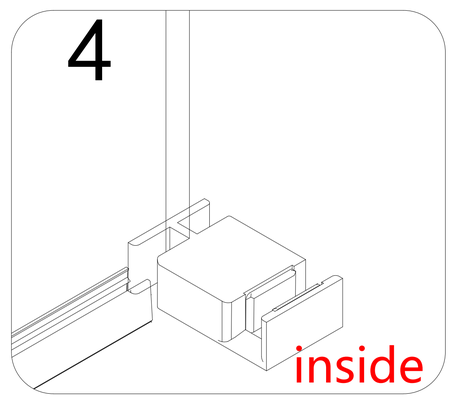

1.This method is applicable for environments when cannot be drilled.
2.Insert the sliding block (16) under the Fixed Panel (18) side and mark it.
3 . As shown in 2, the bottom of the sliding block (16) coated with glass glue for fixation.
4 . As shown in 3, Align the hole at the bottom of the slider with the marked hole and press down.

STEP 6-9

(Left Hand Assembly)

Install the Base Bar 15 and wall decoration cover 13

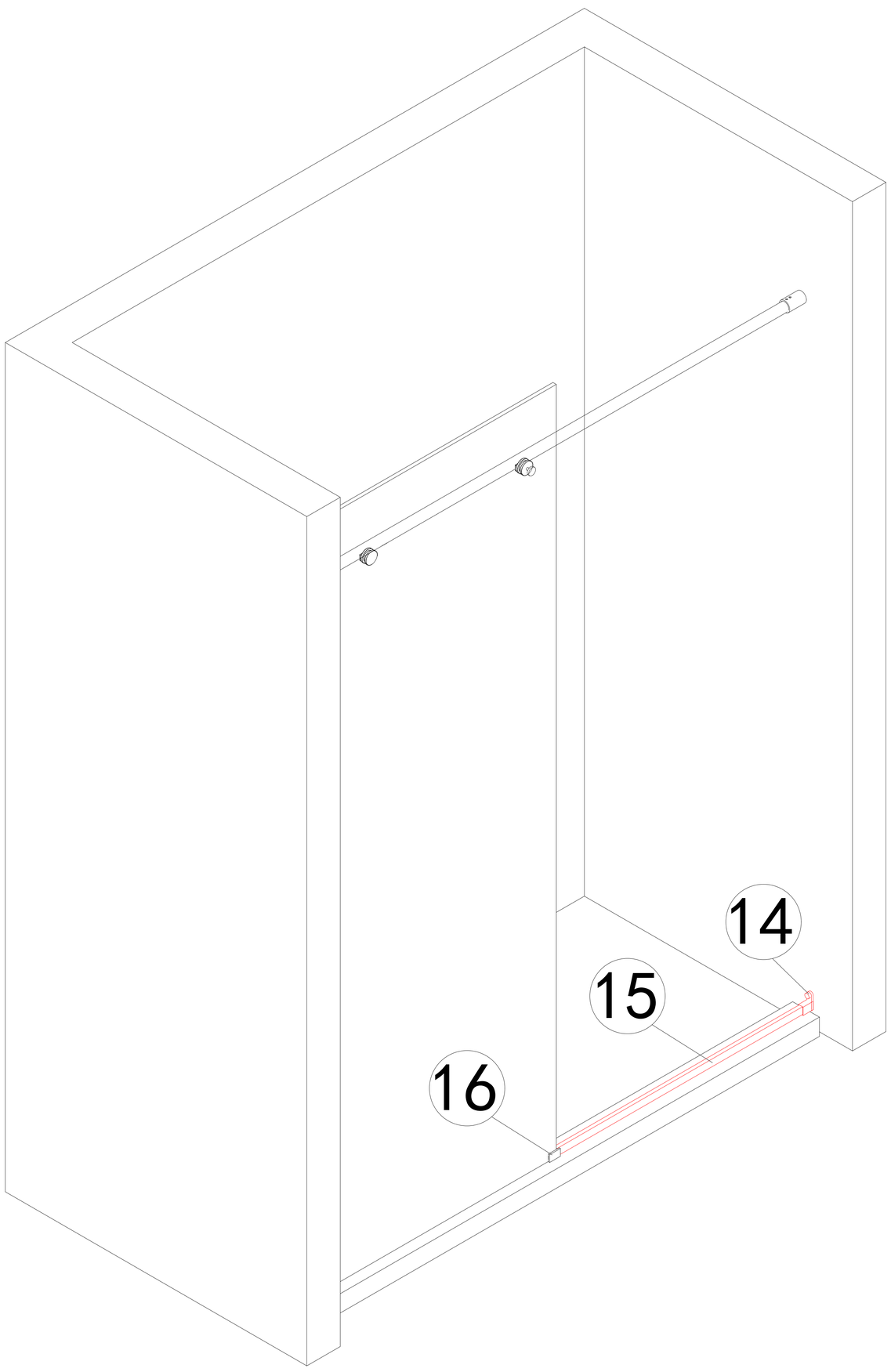

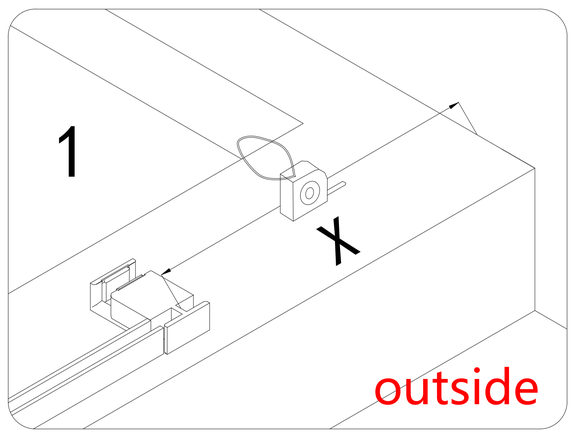

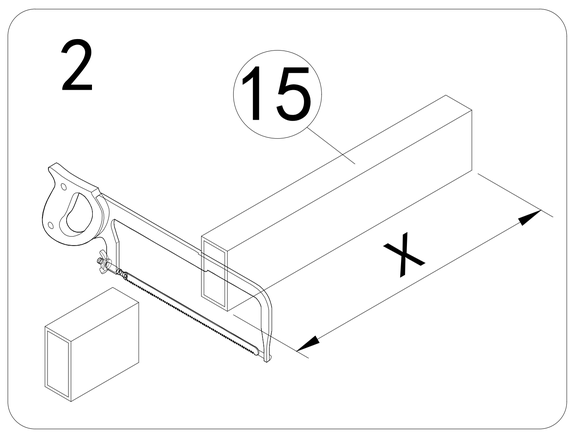

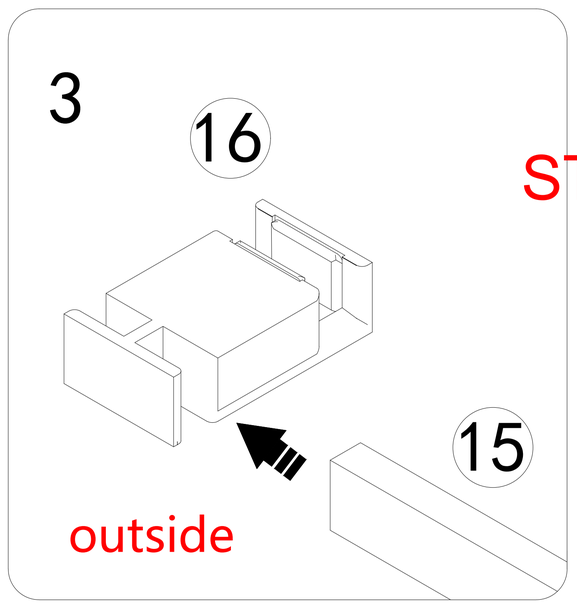

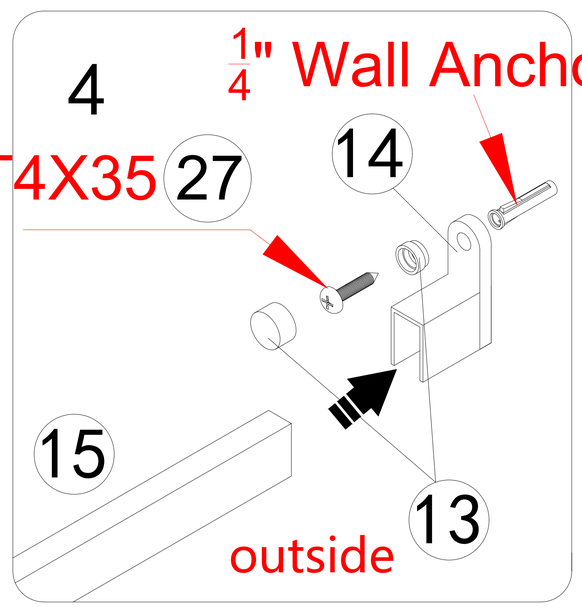

1.Measure the distance from the slot of the Sliding block 16 to the wall surface
2.Cut the Base bar 15 to fit if needed.
3.Insert one end of the Base bar 15 into the gap of Sliding block 16 .
4.Insert the other end into the Bottom Rail Wall Connecting Part 14 ,use 4*35 screw 27 ,fixed to the wall with wall decoration cover 13 .

STEP 6-10

(Left Hand Assembly)

Install the sliding panel 10

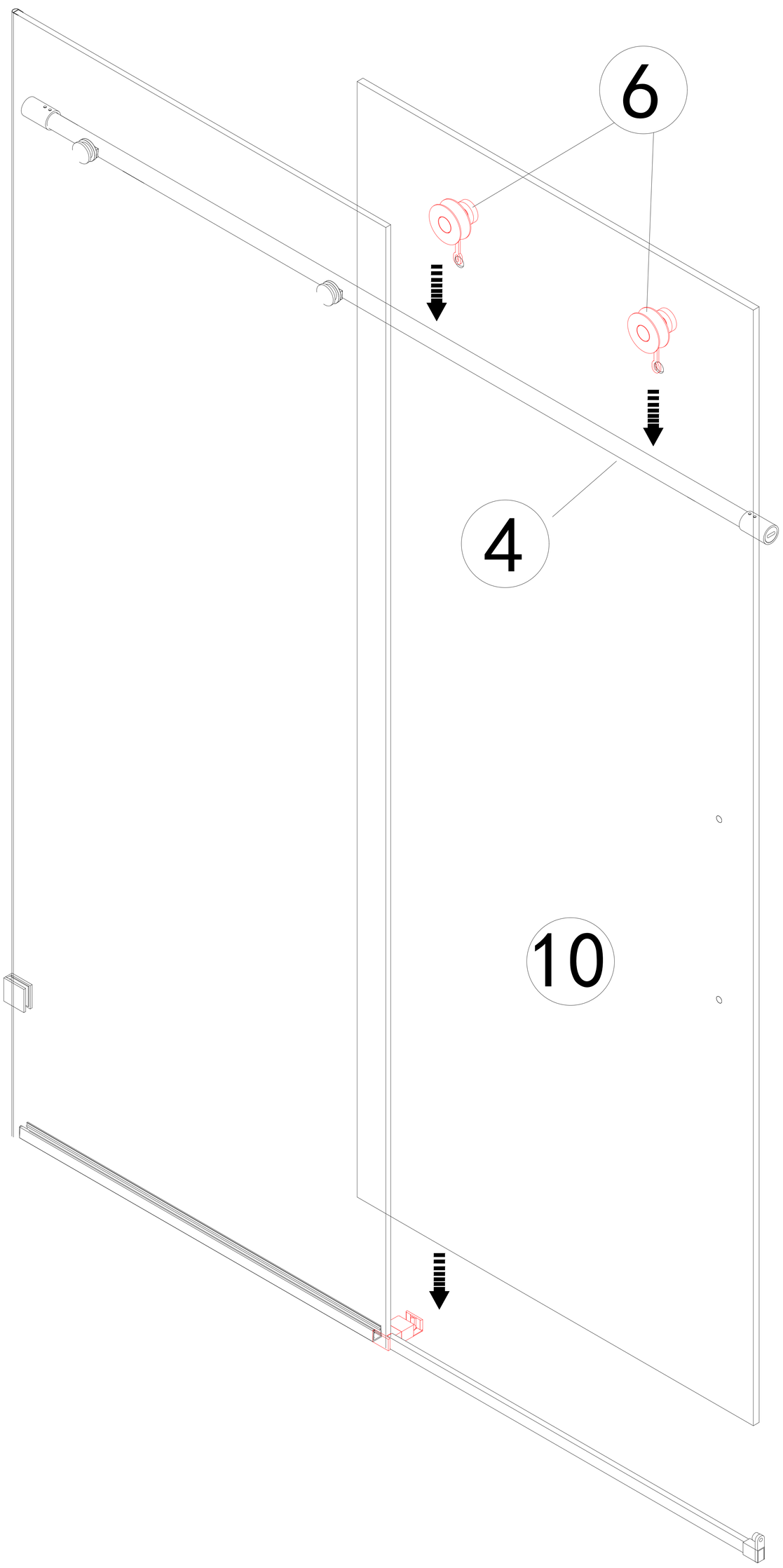

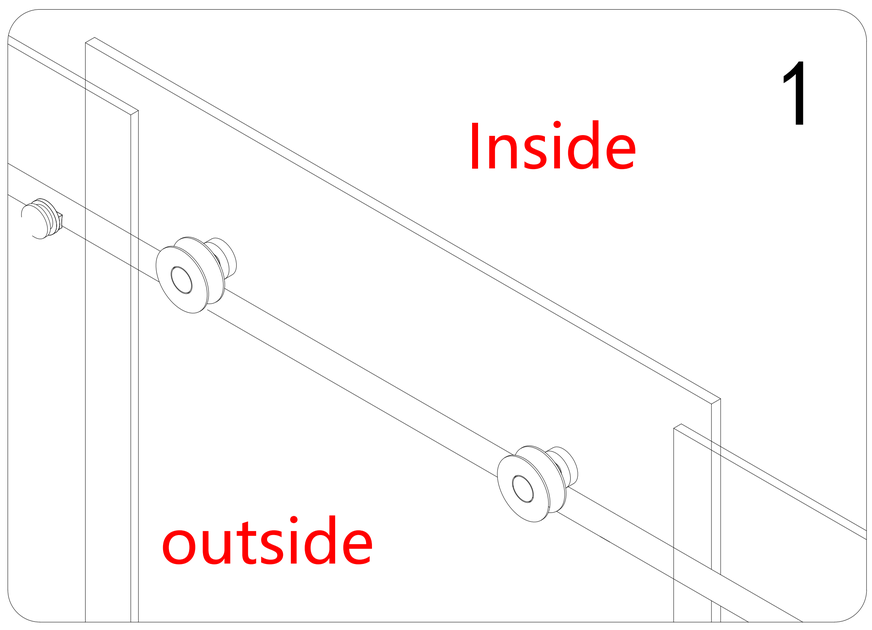

1.Hang the sliding panel 10 on the top rail 4 .

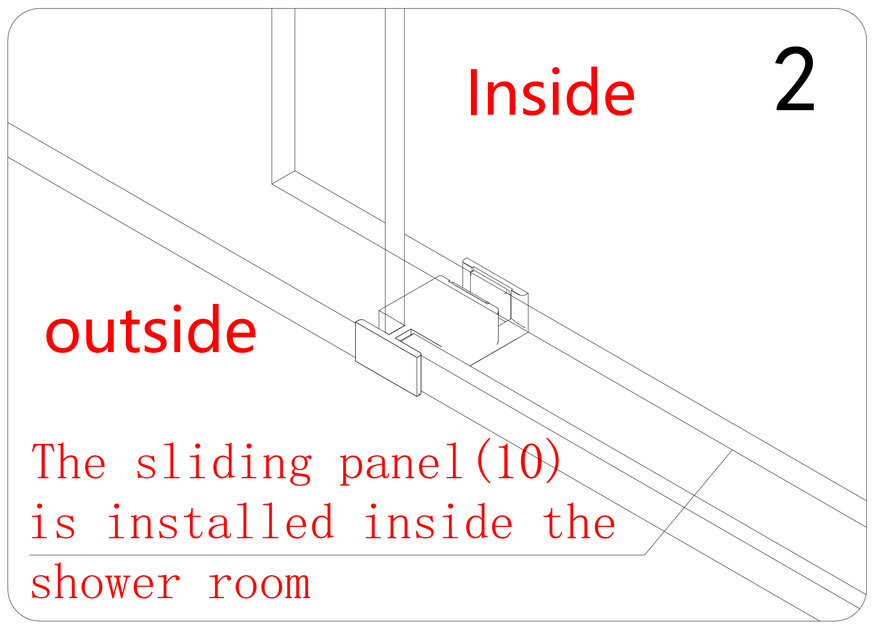

2.Make sure the bottom of the sliding panel 10 loaded into the sliding block 16 .

STEP 6-11

(Left Hand Assembly)

Install the Anti-Jumper (8) on the sliding panel (10)

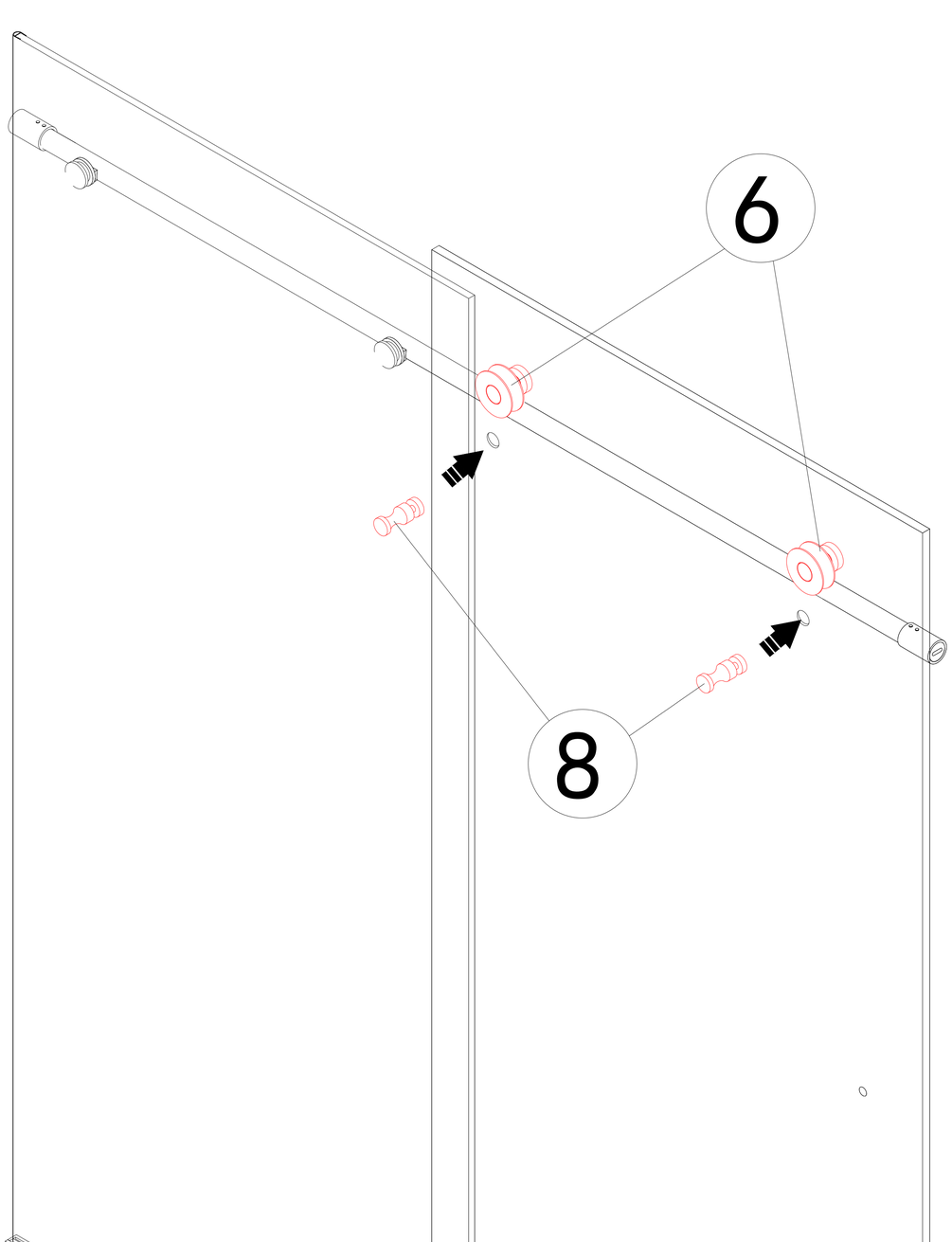

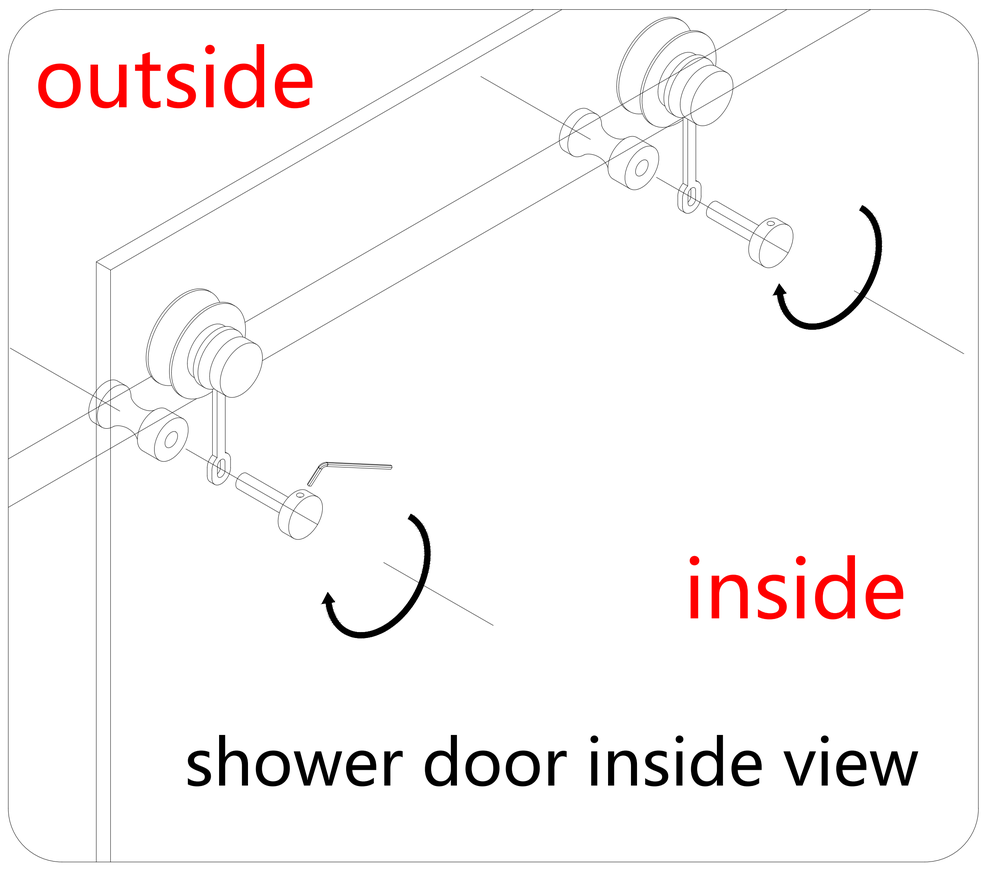

1.Install the Anti-Jumper (8) outside the sliding panel (10) .
2.Use 2.5mm Allen wrench to tight inside.

STEP 6-12

(Left Hand Assembly)

Adjust the height of the sliding panel (10) to ensure it is parallel to the wall surface

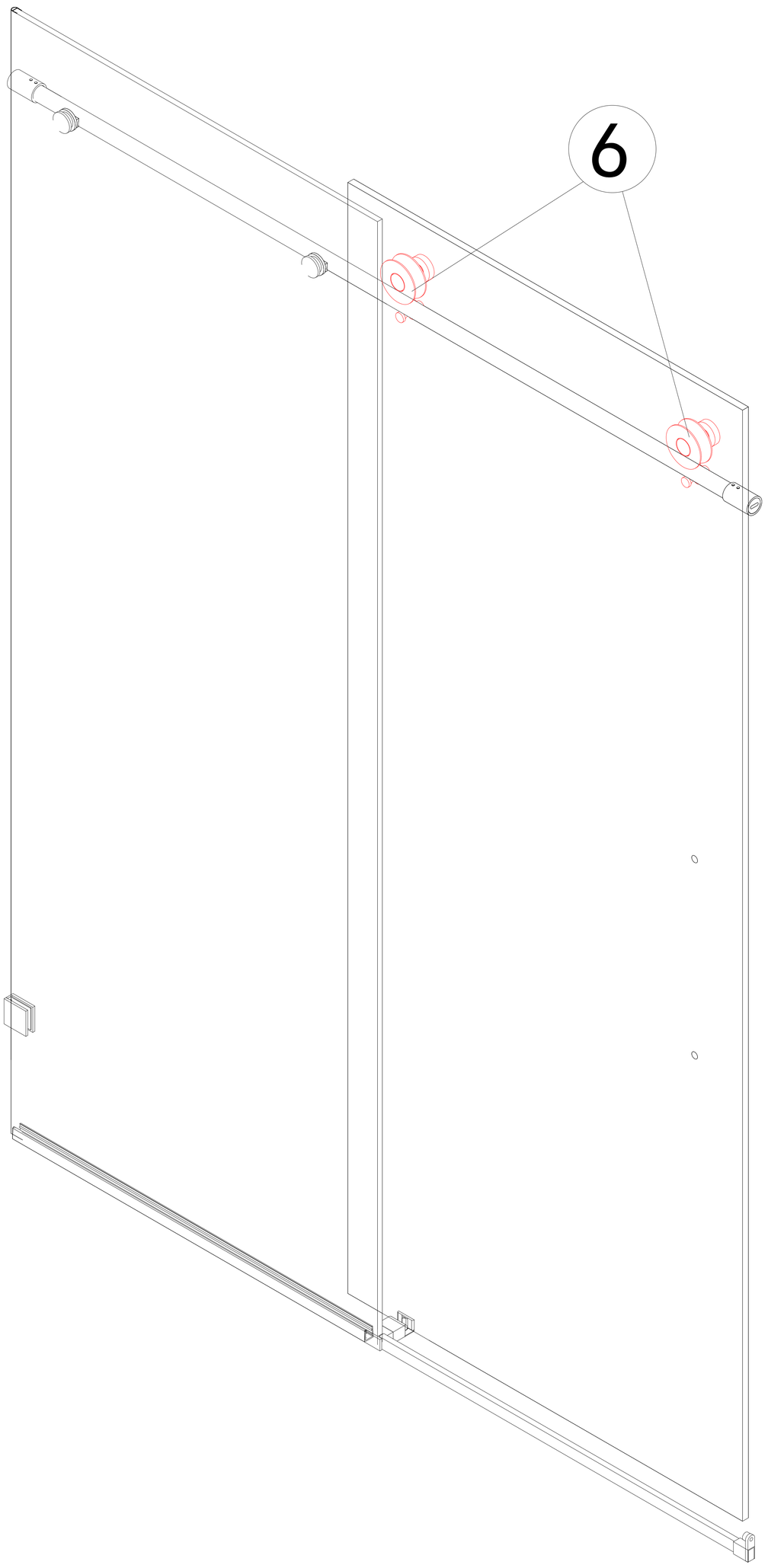

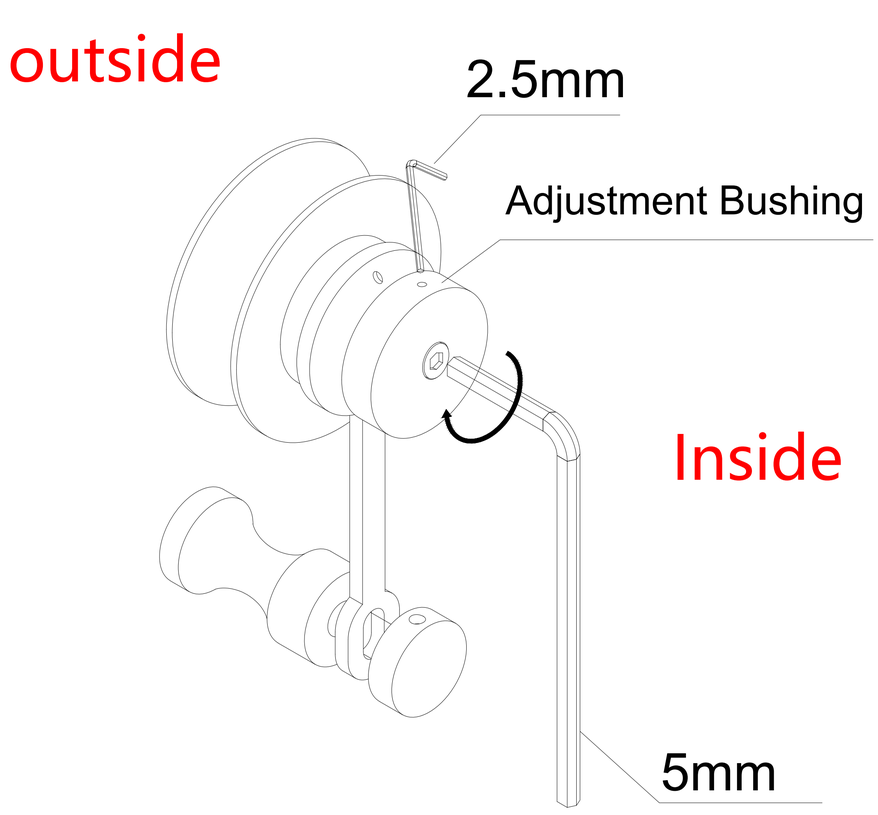

1.Use 2.5mm Allen key to rotate the eccentric shaft of the roller, adjust the height of the sliding panel.
2.Use 5mm Allen key to tight the roller.

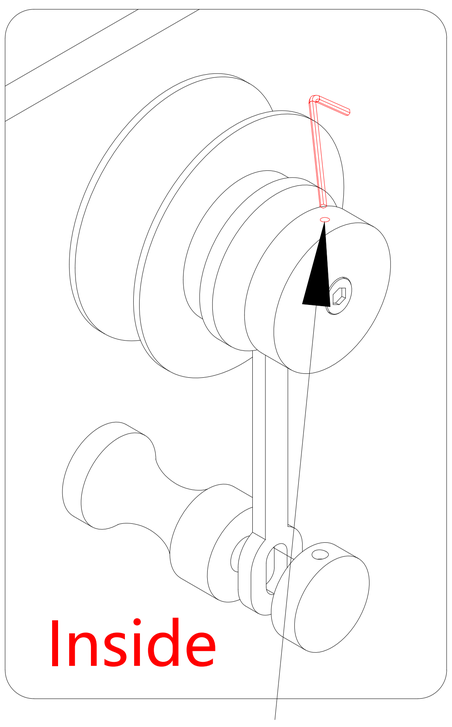

When the position of the small hole is facing upwards, the height of the sliding panel (10) is the lowest

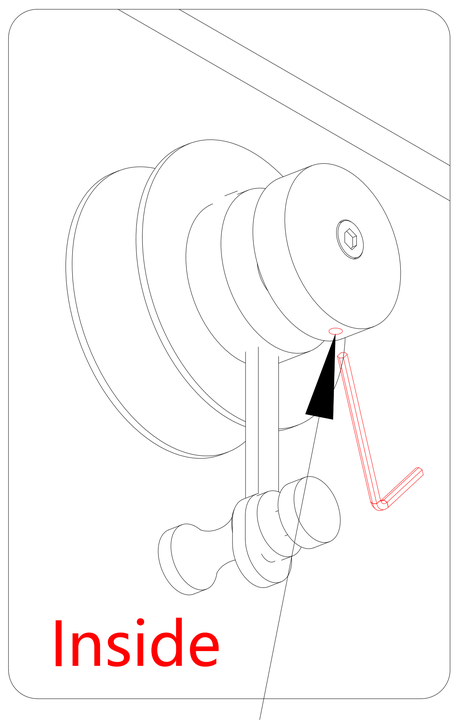

When the position of the small hole is facing downwards, the height of the sliding panel (10) is the highest

STEP 6-13

(Left Hand Assembly)

Install the Bumper Strip ⑨ and F-form waterproof strip ⑪ .

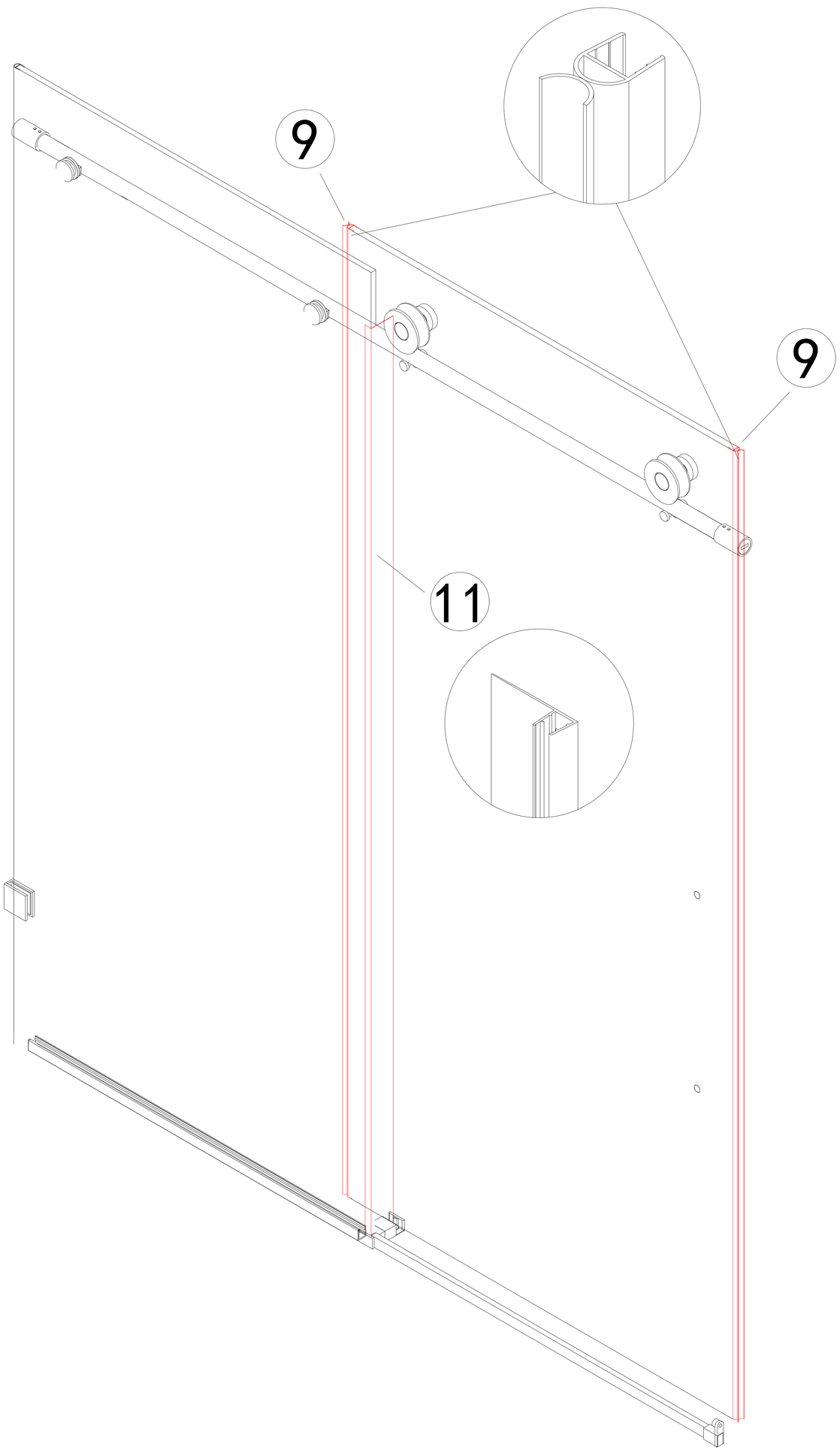

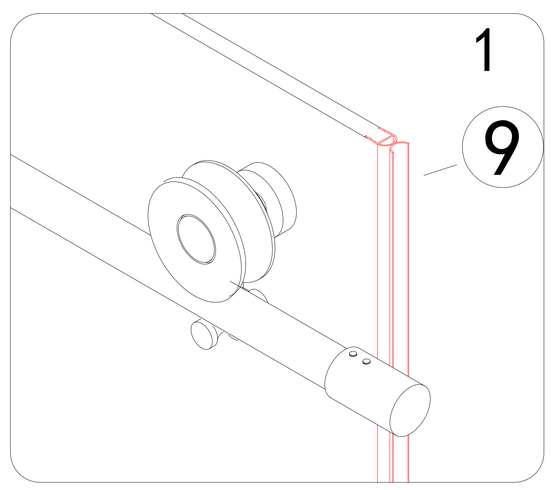

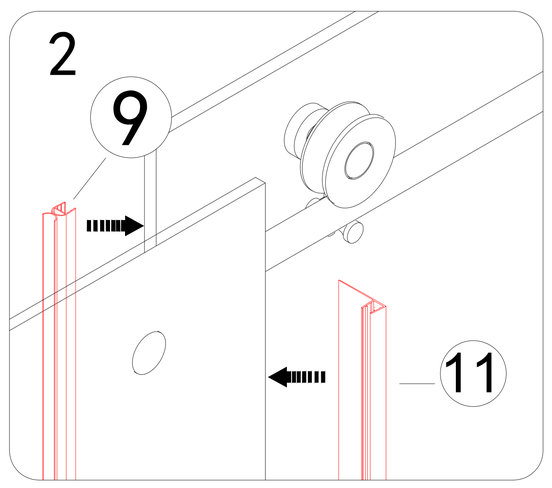

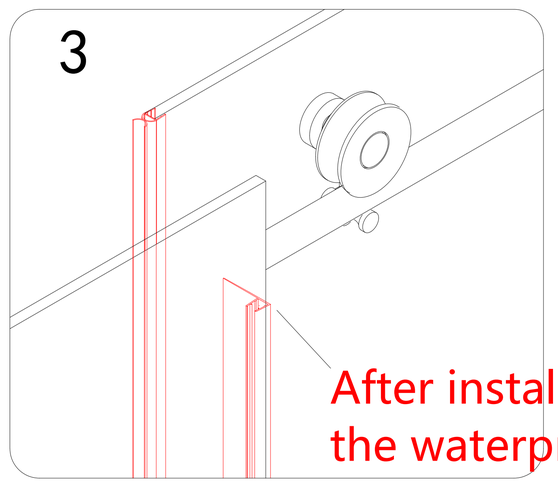

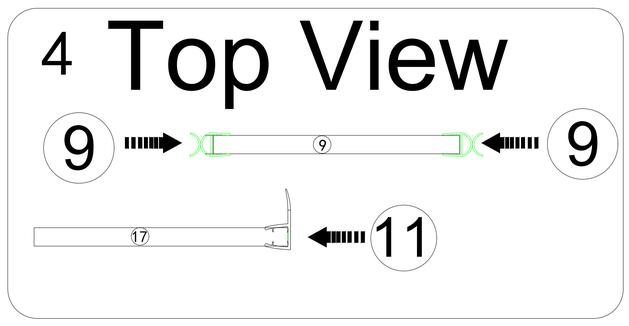

After installing the shower door,cut the waterproof strip under the track

STEP 6-14

(Left Hand Assembly)

Install the Handle 12 .

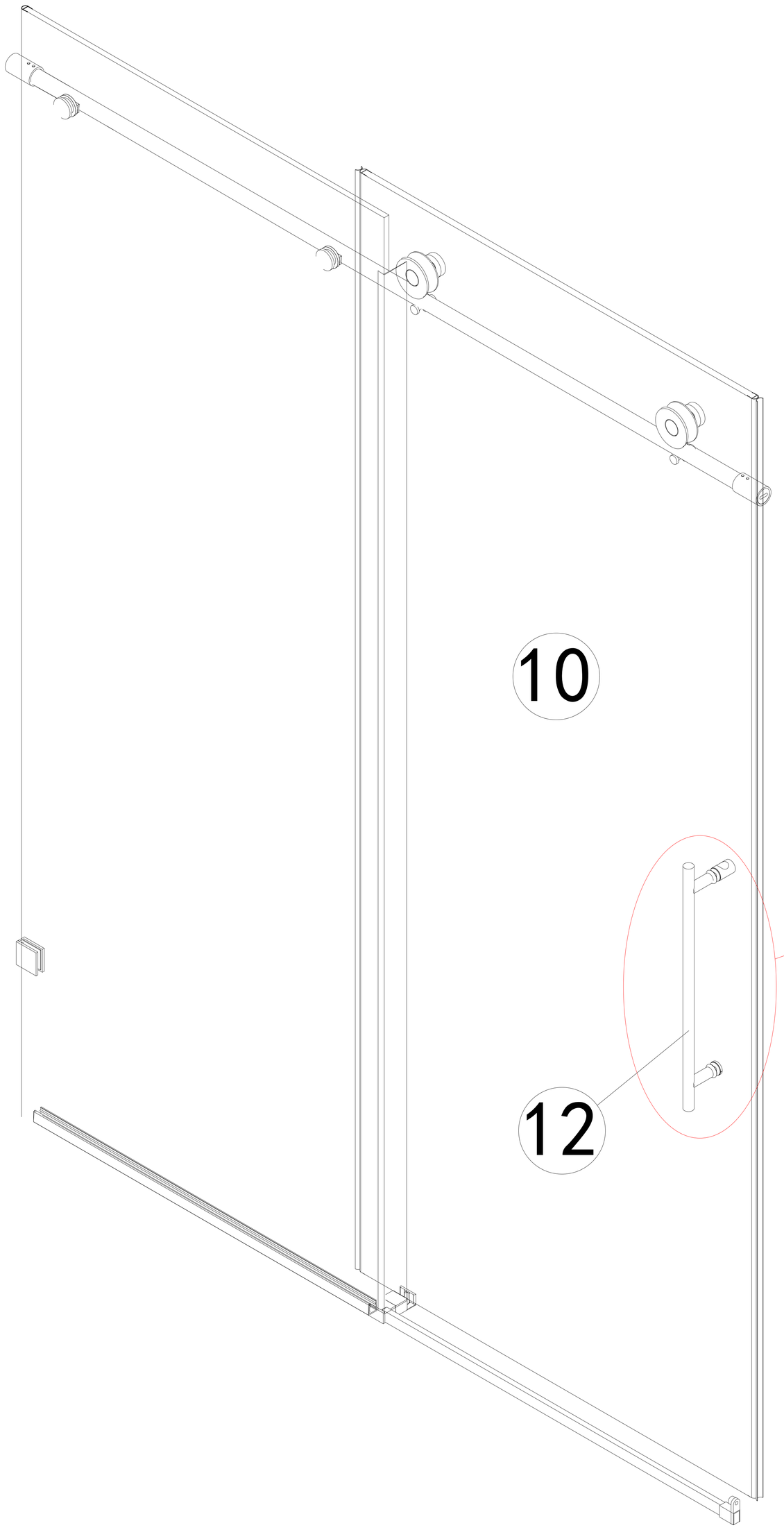

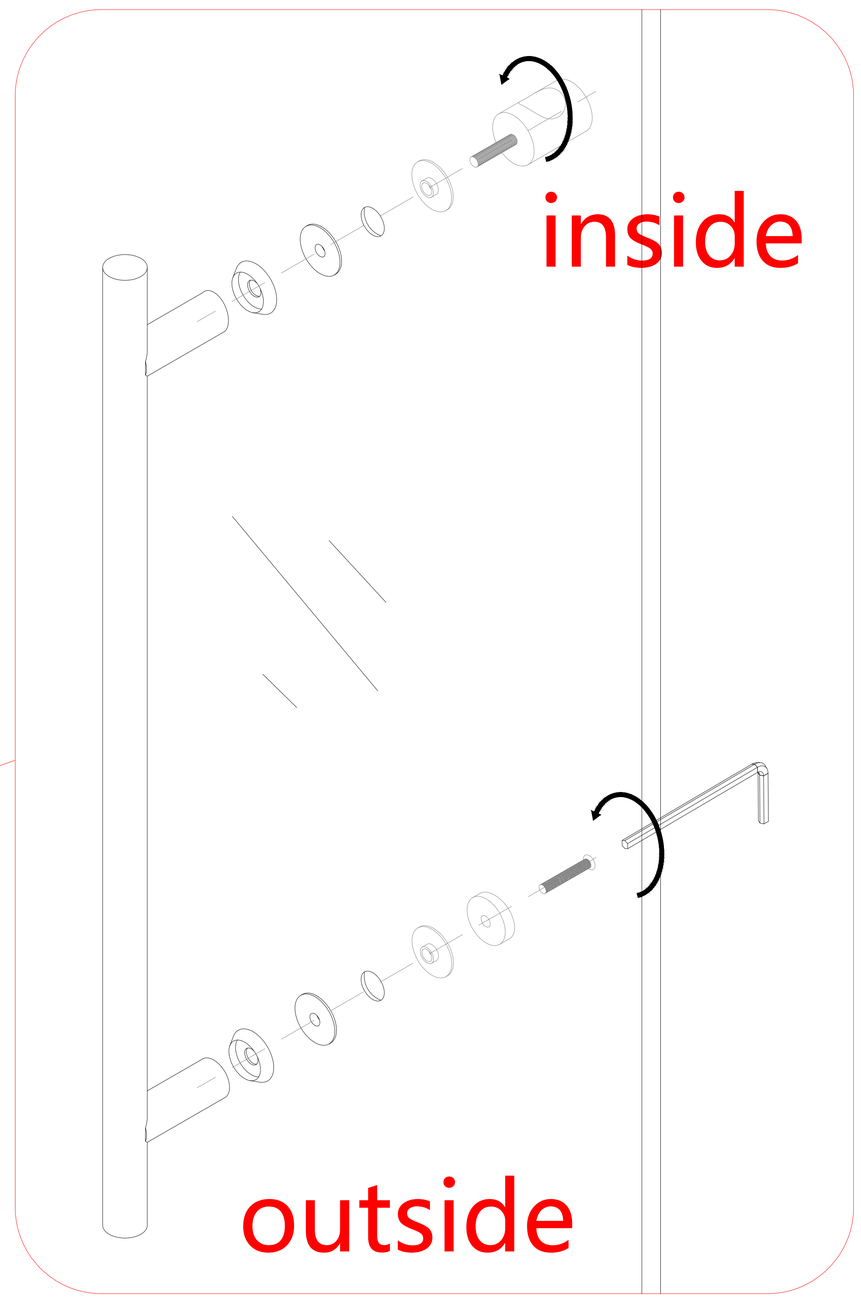

Use 2.5mm Allen wrench to tight.

STEP 6-15

(Right Hand Assembly)

Preparation work before installing the Fixed Panel 18

1. Use the Allen key to loosen the outer shell and remove it.

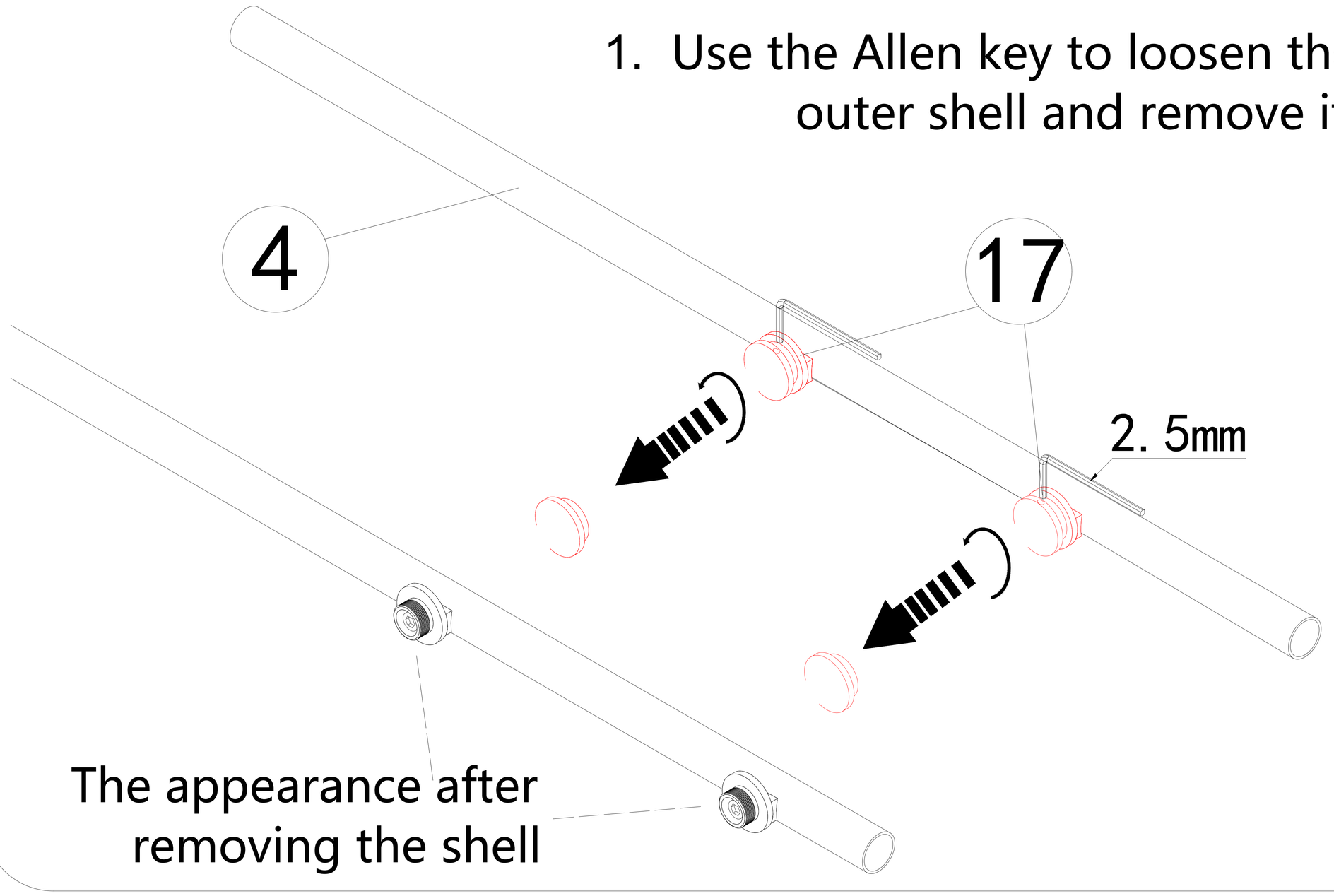

STEP 6-16

(Right Hand Assembly)

Preparation work before installing the Top Rail 4

1. Insert the Rail Wall Connector (3-B) into the two sides of pull rod.
2. Utilize the 2.5mm Allen key to tighten the screw inside.

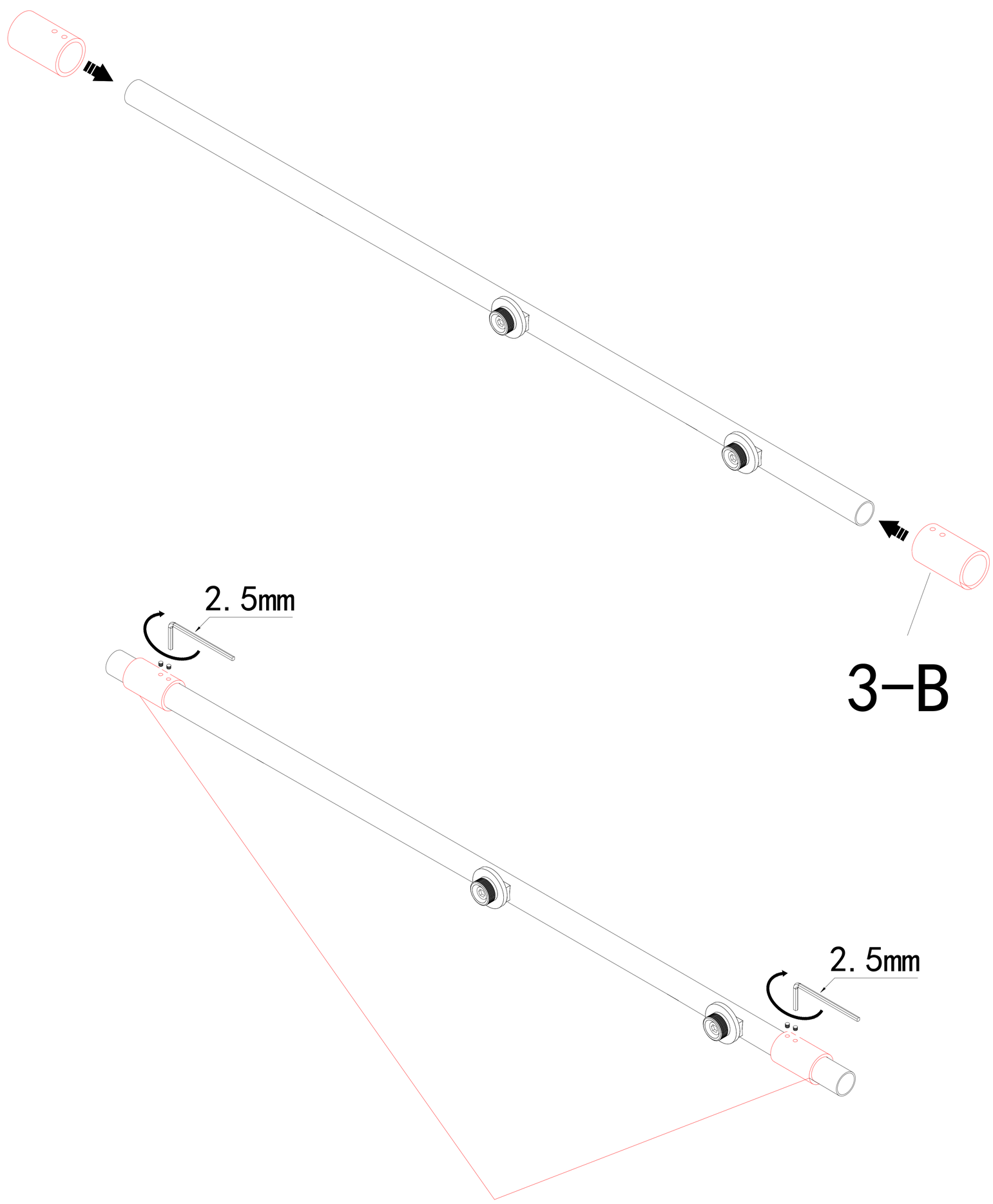

(Don't tighten it too tightly, as long as the part can't move)

STEP 6-17

(Right Hand Assembly)

Install the roller assembly (6) on the sliding panel (10)

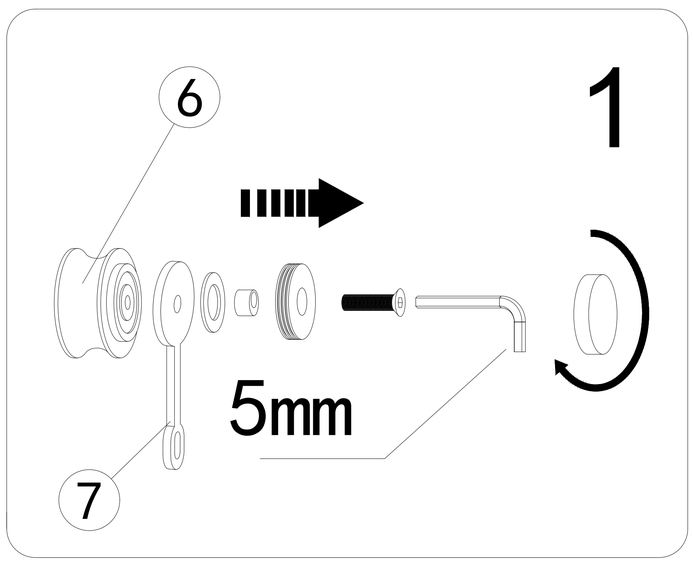

1. Disassemble the roller assembly (6) as shown, unscrew the cover and loosen the big bolt.

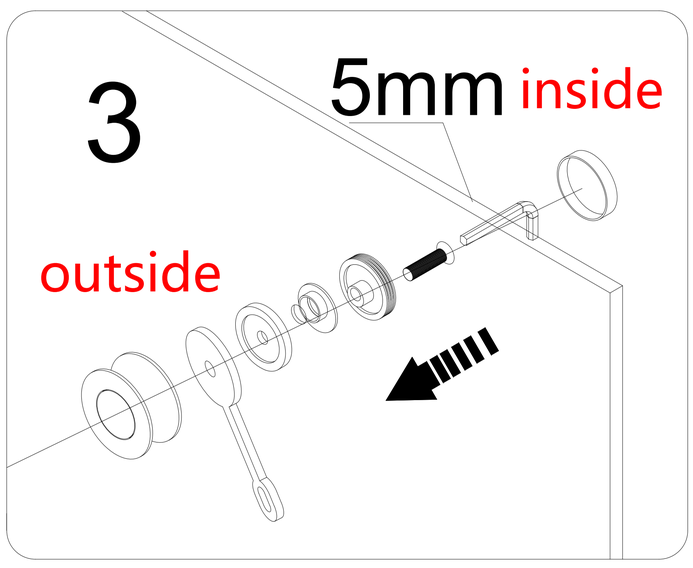

2. Reassemble the two roller assembly (6) onto the sliding panel (10) as shown in the picture. When finished, move the sliding panel (10) to the shower area.

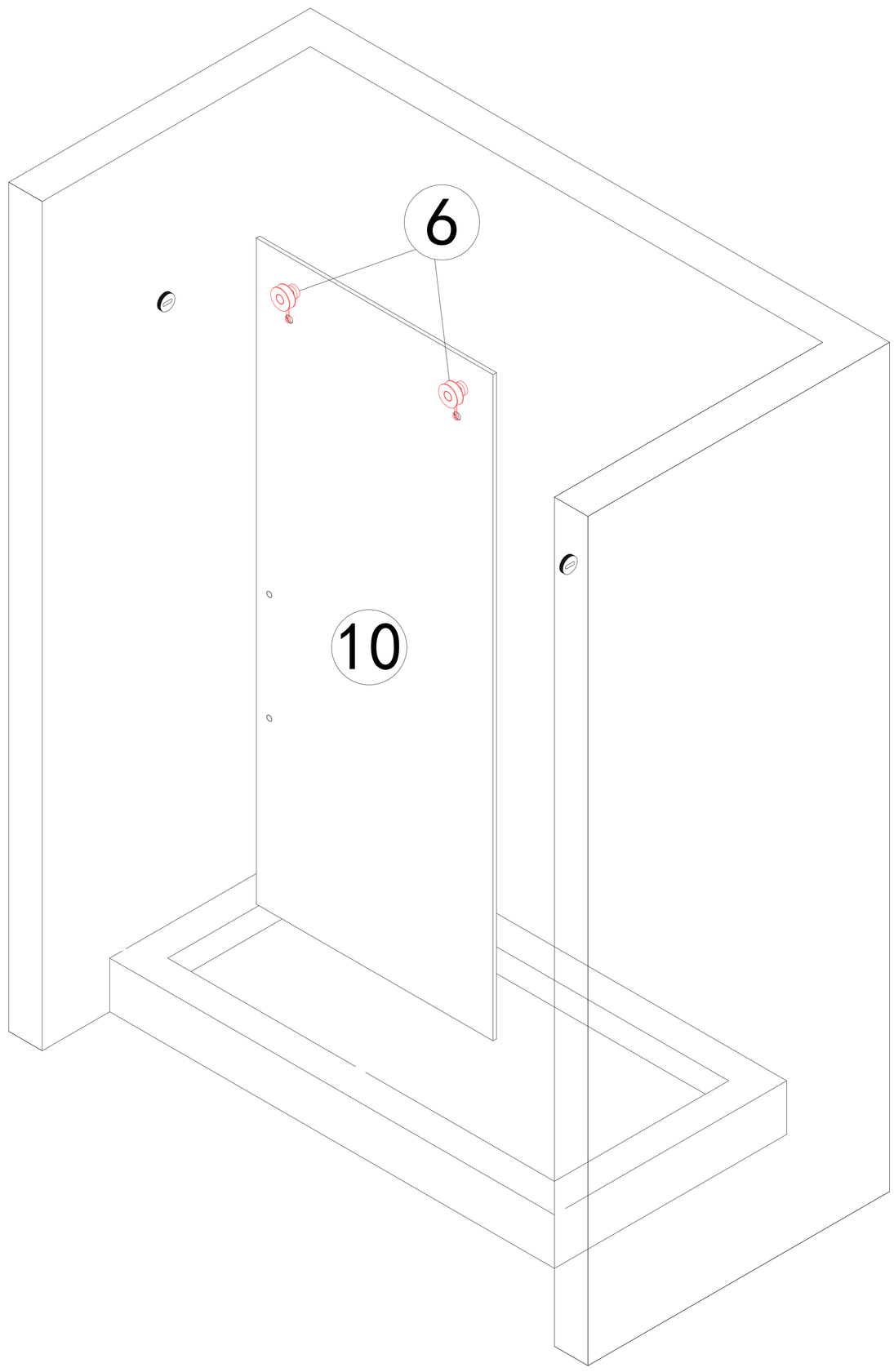

Move the active panel to the shower area.
Lay the glass on a soft padded surface!

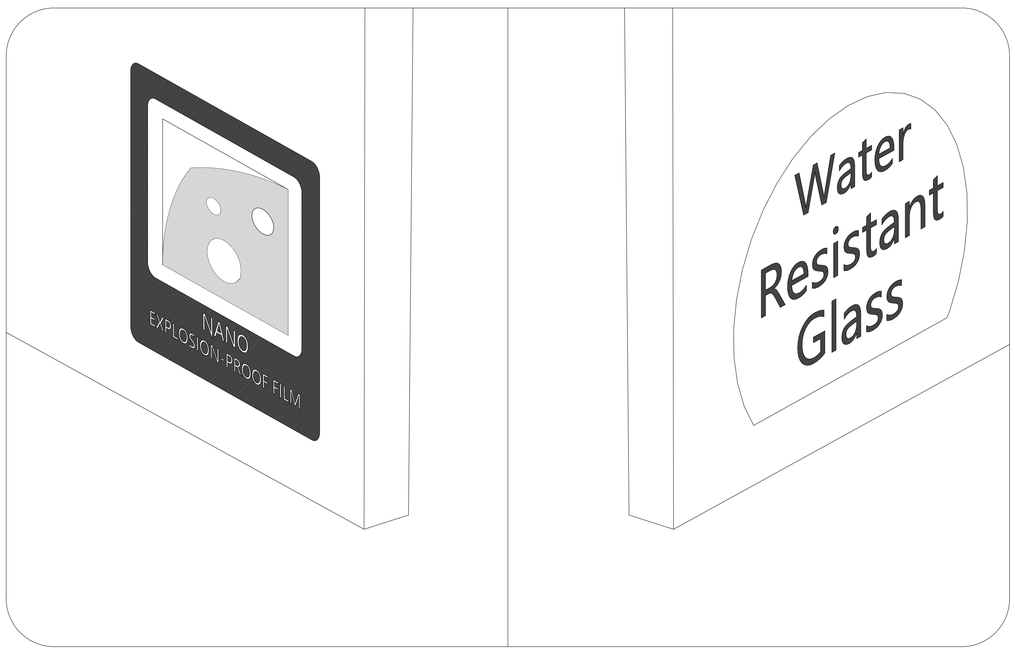

Note:The active glass is double-sided nano , can be freely installed.

STEP 6-18

(Right Hand Assembly)

Install the top rail ④ on the rail wall connector ③

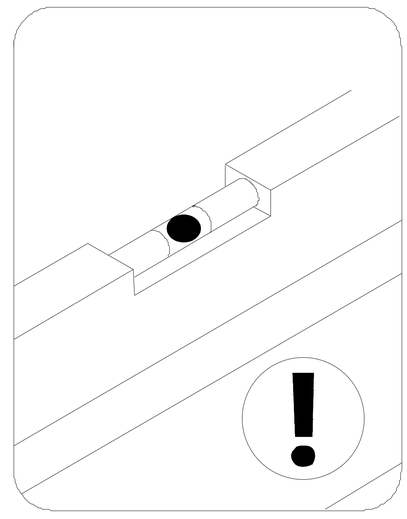

Threshold must be level

1.Screwing the rod and Wall Connector (3-B)in the Wall Connector(3-A).

2.Tightening by 2.5mm Allen Wrench.

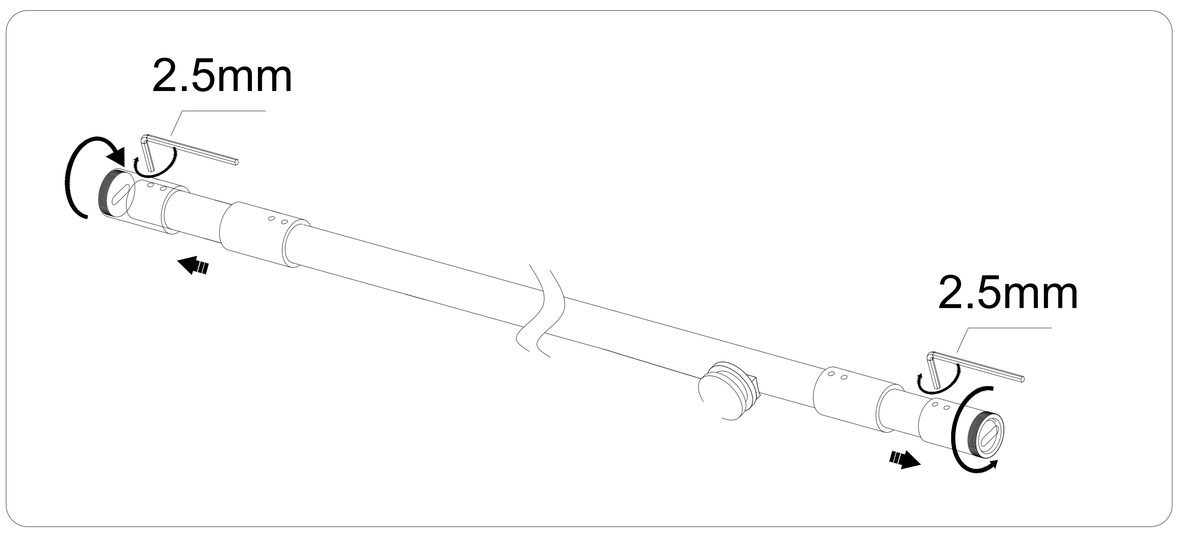

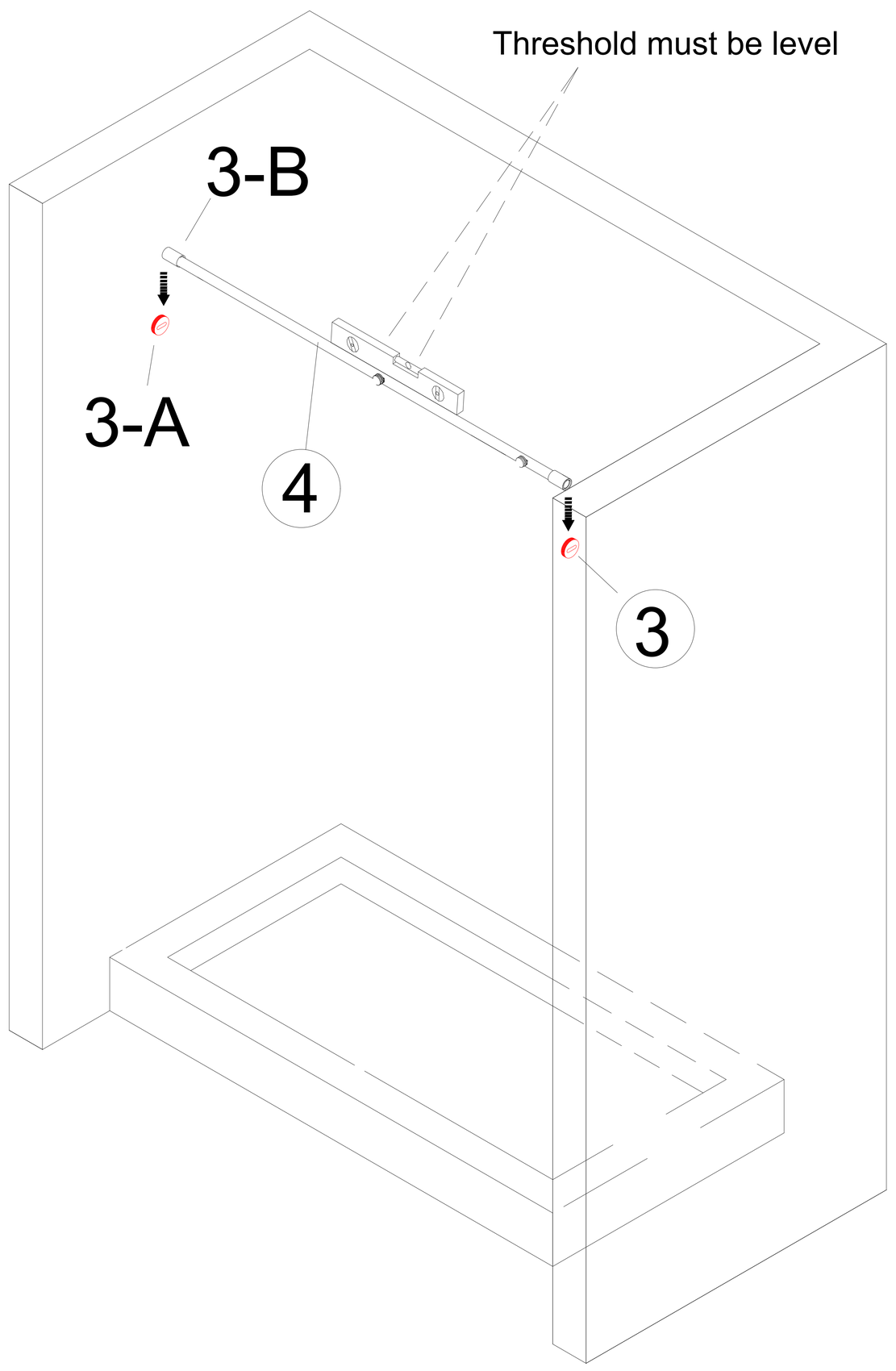

STEP 6-19

(Right Hand Assembly)

Install the Waterproof strip 23 and U-form waterproof strip 19 on the Fixed Panel 18

After installation, please place the glass on a soft ground!

Note:the Waterproof strip 23 needs to be cut according to the position of the Wall connecting clip 24 otherwise it will affect the installation!

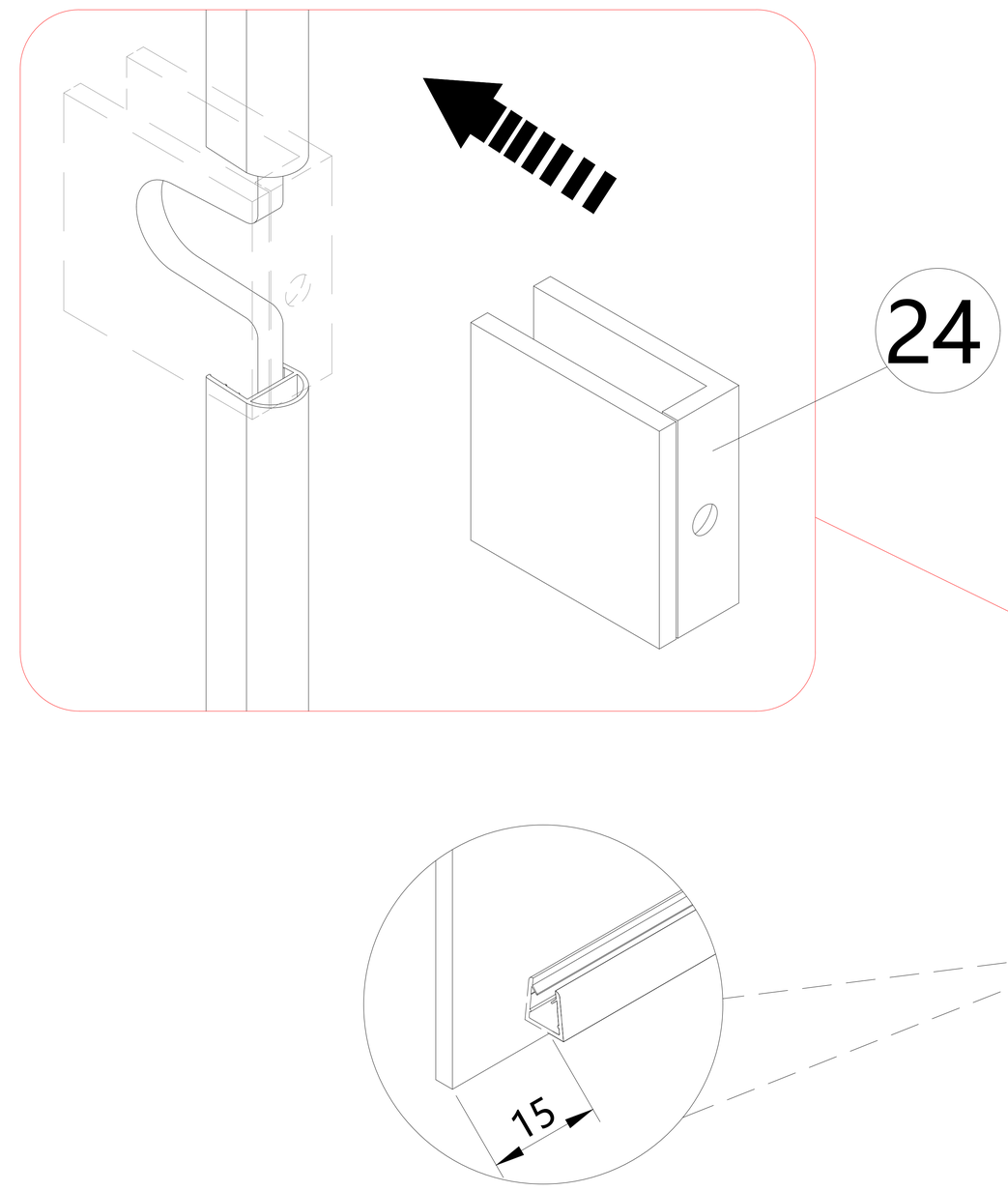

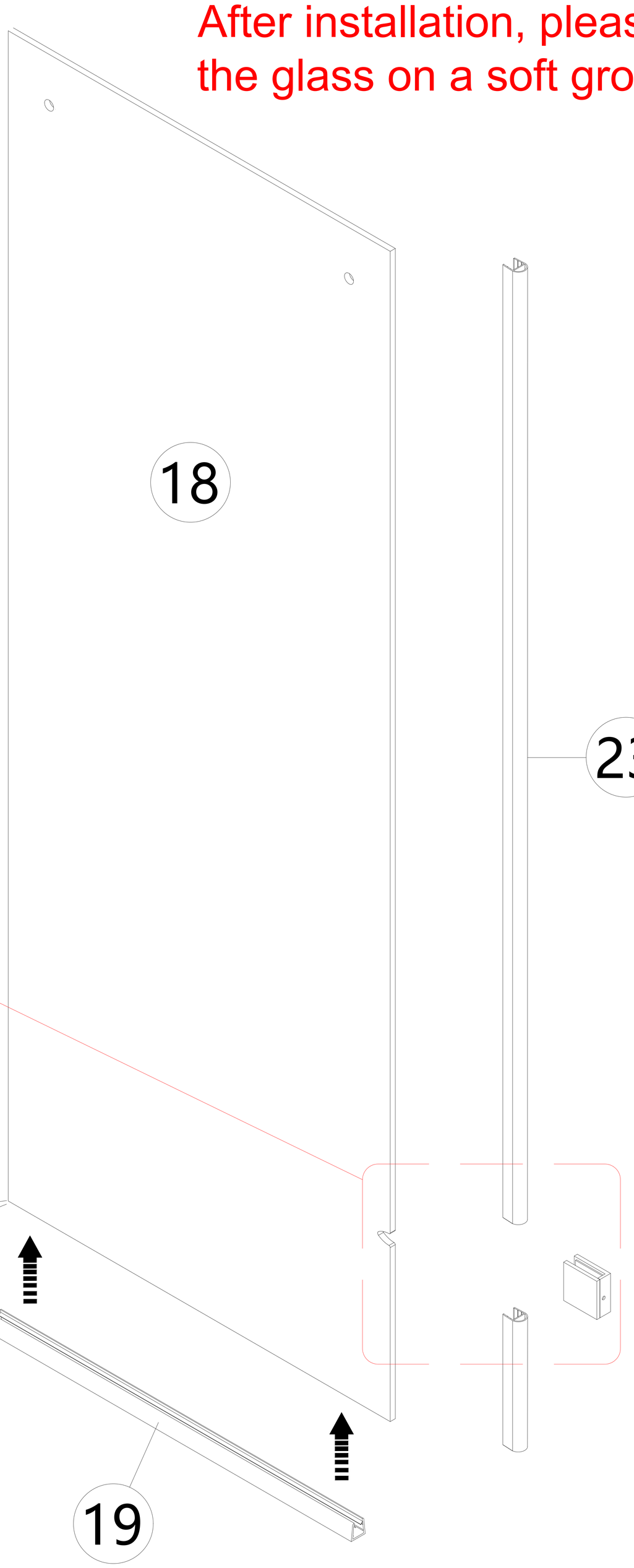

The waterproot strip is 15mm away from outside of the galss.

STEP 6-20

(Right Hand Assembly)

Preparation work before installing the Wall connecting clip 24

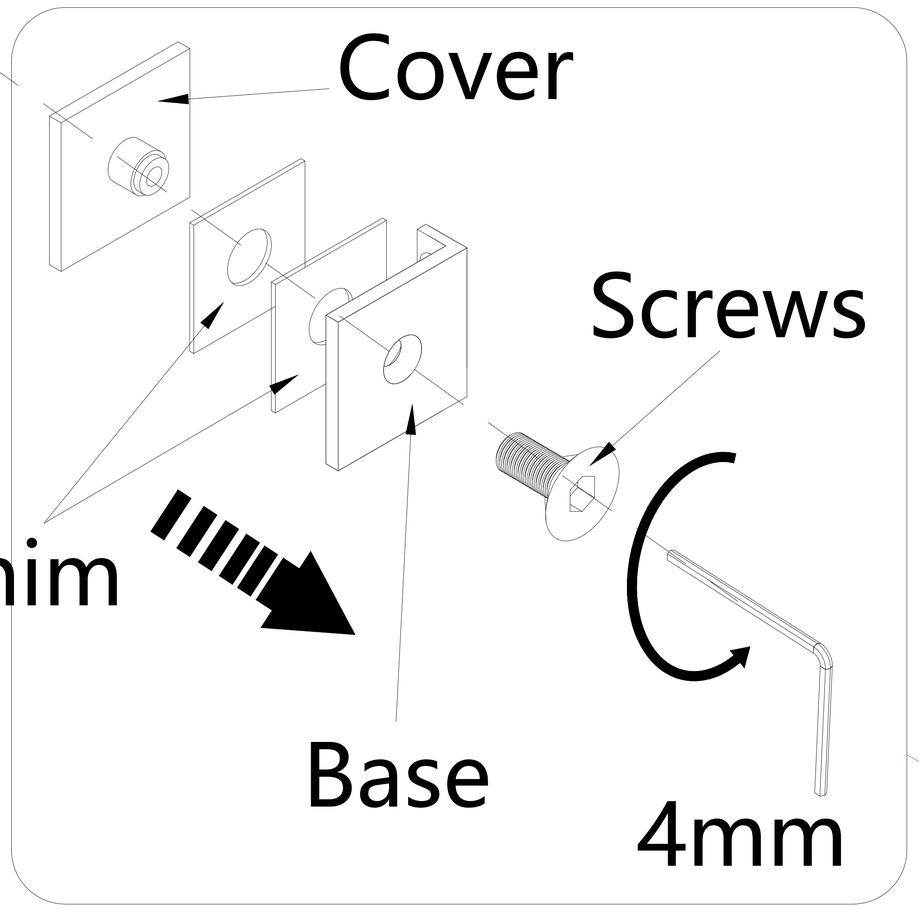

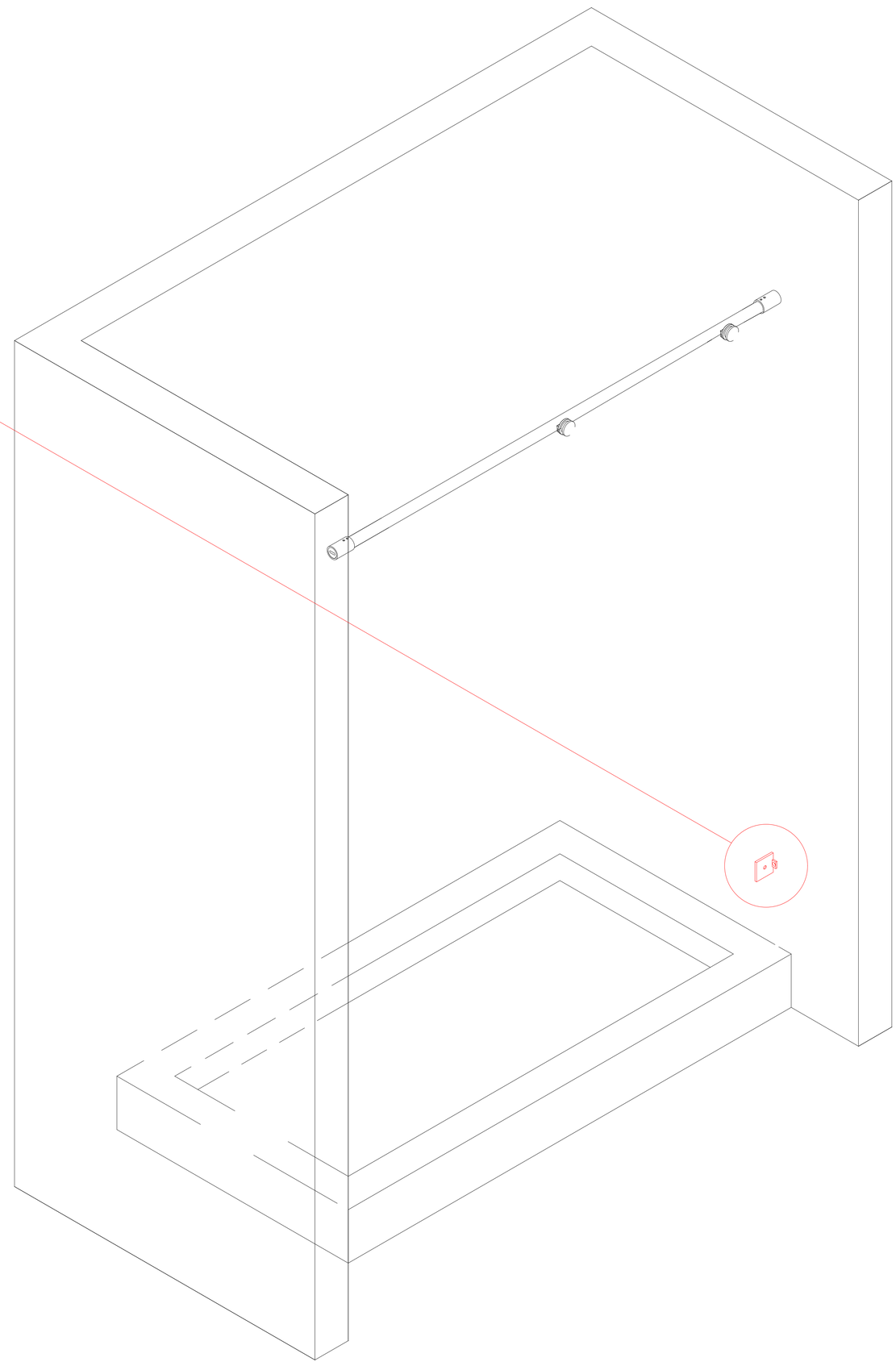

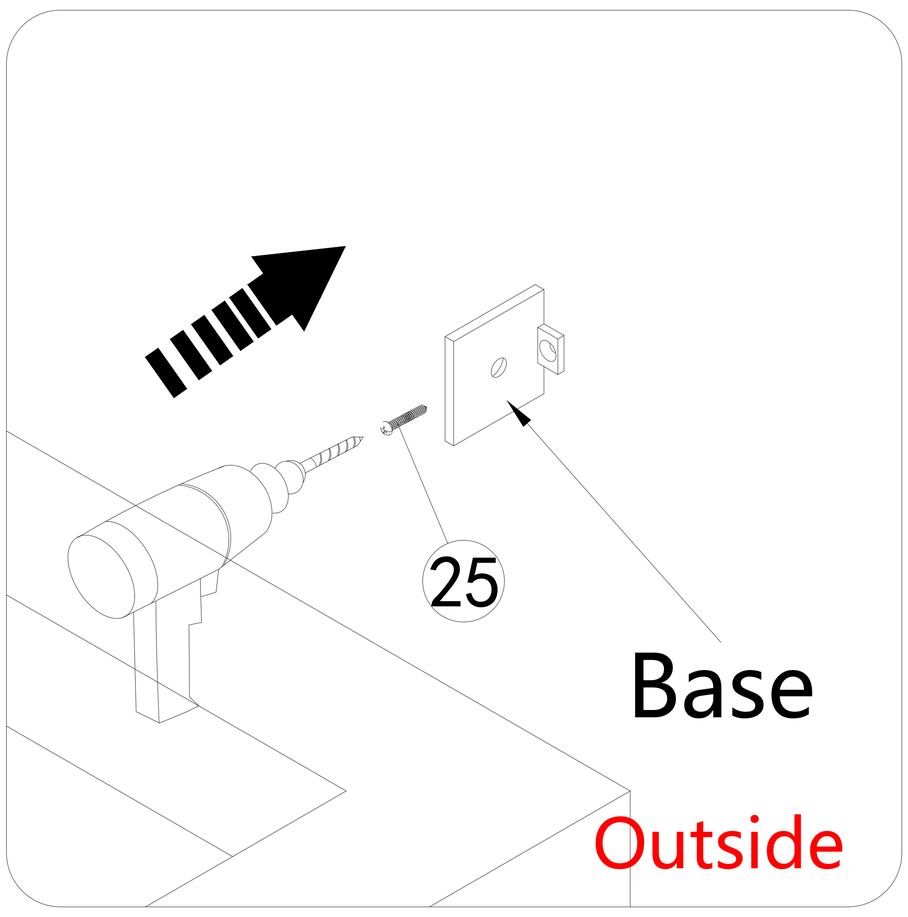

First, disassemble the Wall connecting clip 24 , and then use ST4X40 screws 25 to align the base with the page 8 drilled hole for installation.

STEP 6-21

(Right Hand Assembly)

Install the fixed panel 18 on the top rail 4

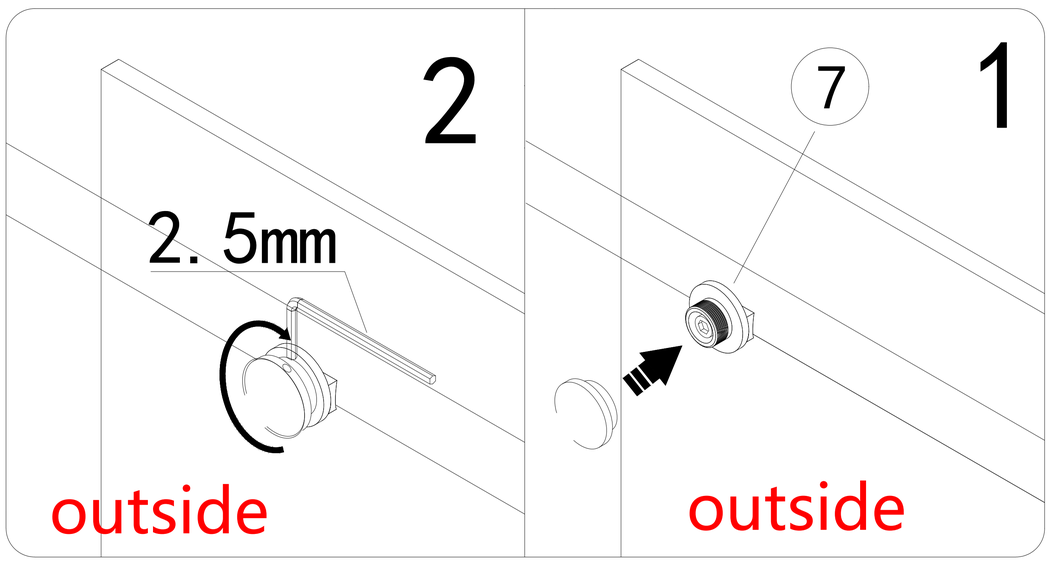

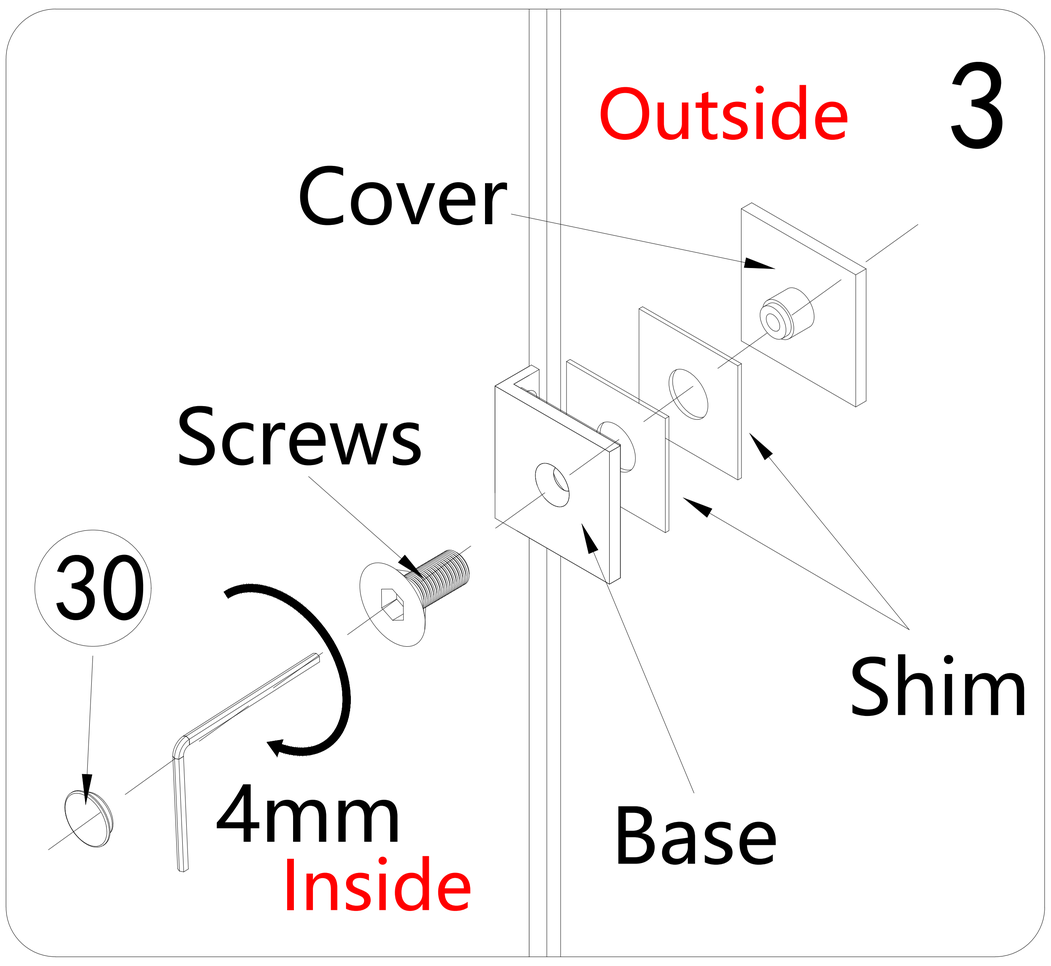

Note:The fixed glass is double-sided nano , can be freely installed.

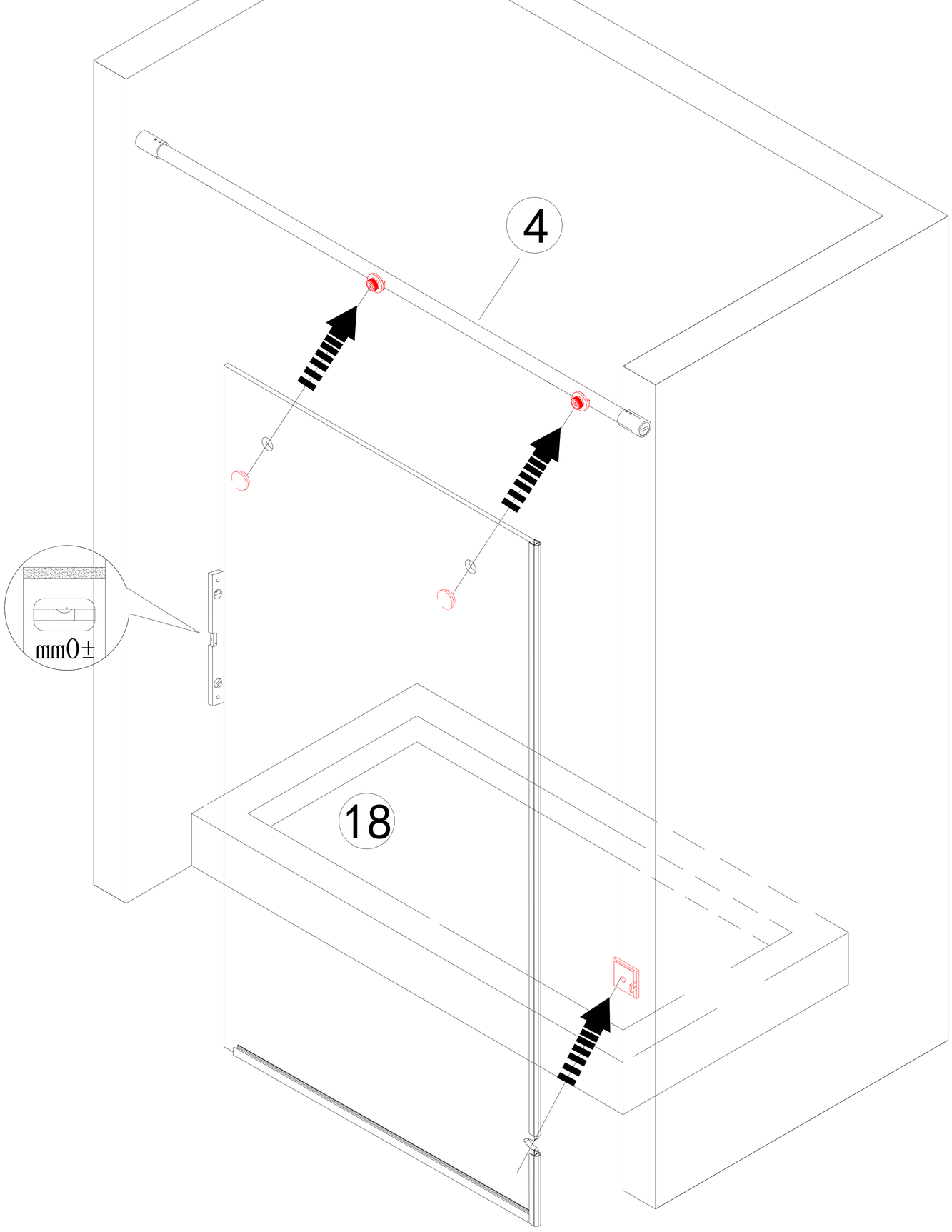

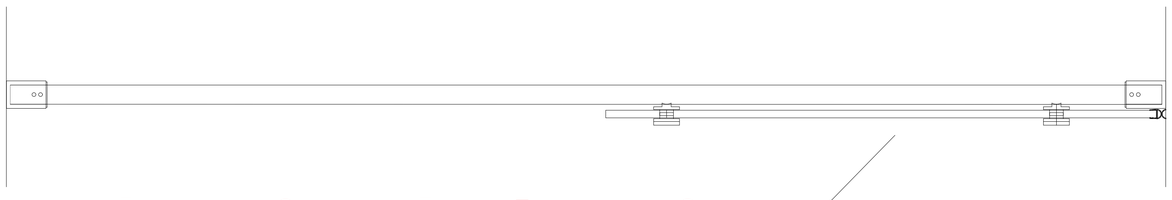

The Fixed glass is installed on the outside of the shower room

STEP 6-22

(Right Hand Assembly)

Install the sliding block 16

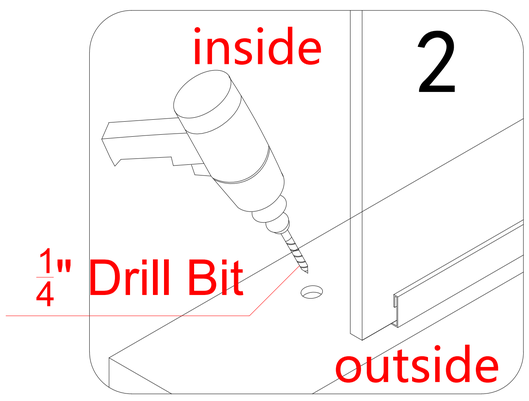

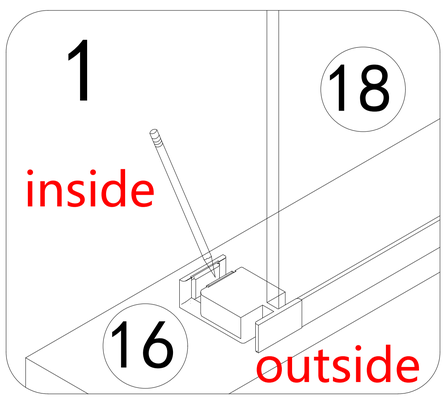

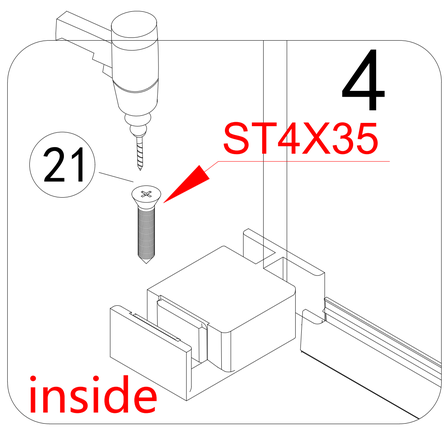

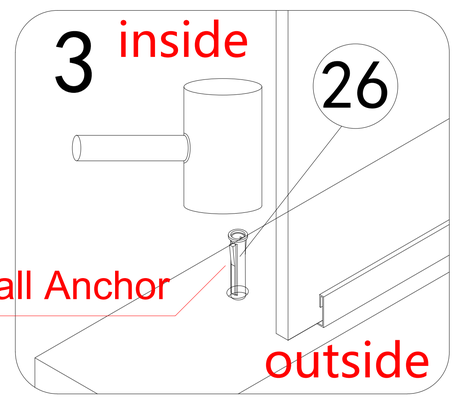

1.Insert the sliding block 16 under the Fixed Panel 18 side and mark it.
2 .Drill ∅ 1/4"(6.4mm) holes.
3. Inject Ø6 Wall Anchor 26 into the hole;
4. Secure the sliding block 16 with ST4X35 screws 21 .

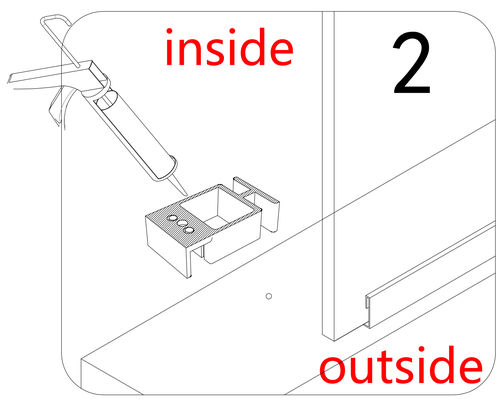

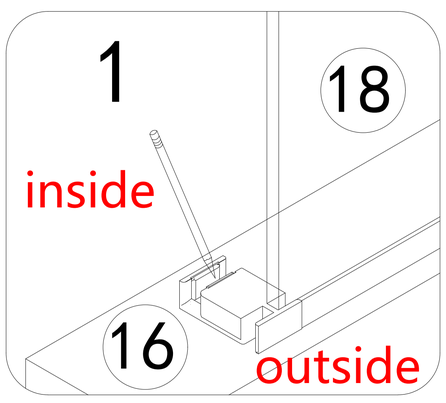

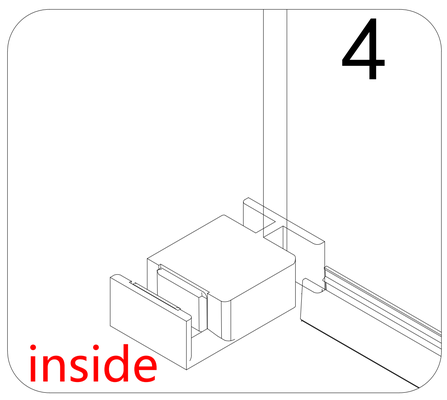

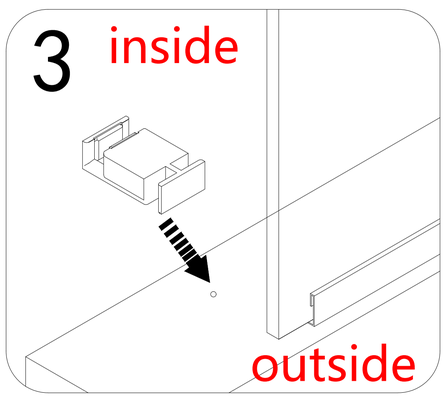

1.This method is applicable for environments when cannot be drilled.
2.Insert the sliding block 16 under the Fixed Panel 18 side and mark it.
3 . As shown in 2, the bottom of the sliding block 16 coated with glass glue for fixation.
4 . As shown in 3, Align the hole at the bottom of the slider with the marked hole and press down.

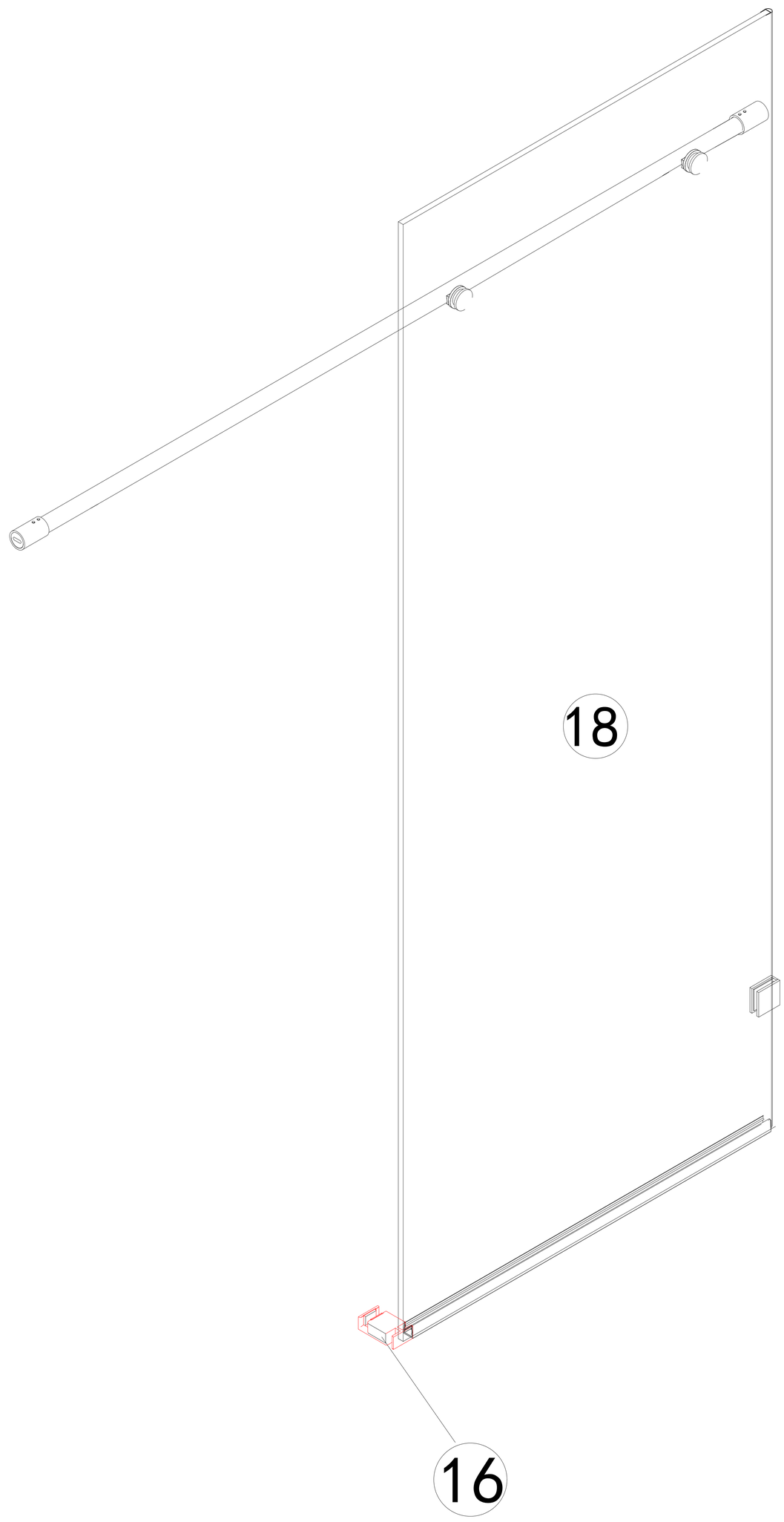

STEP 6-23

(Right Hand Assembly)

Install the Base Bar 15 and wall decoration cover 13

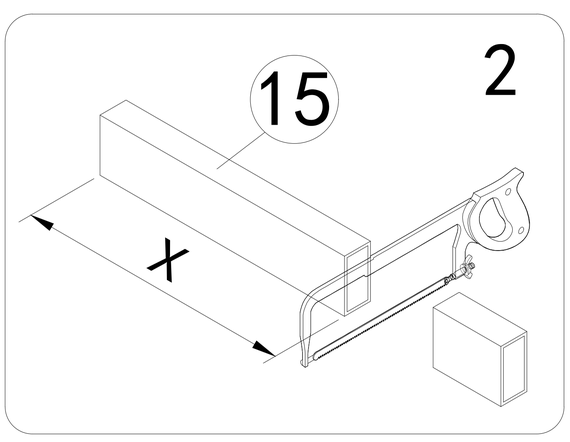

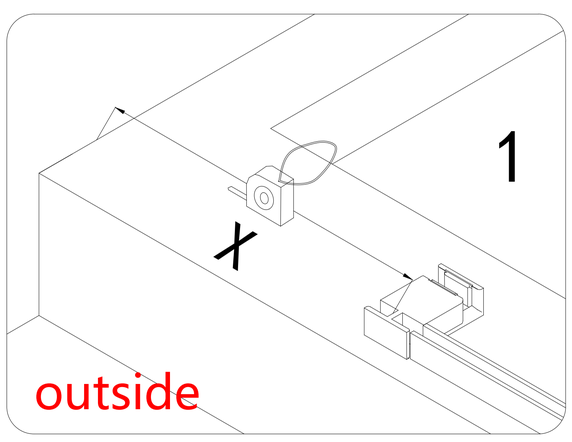

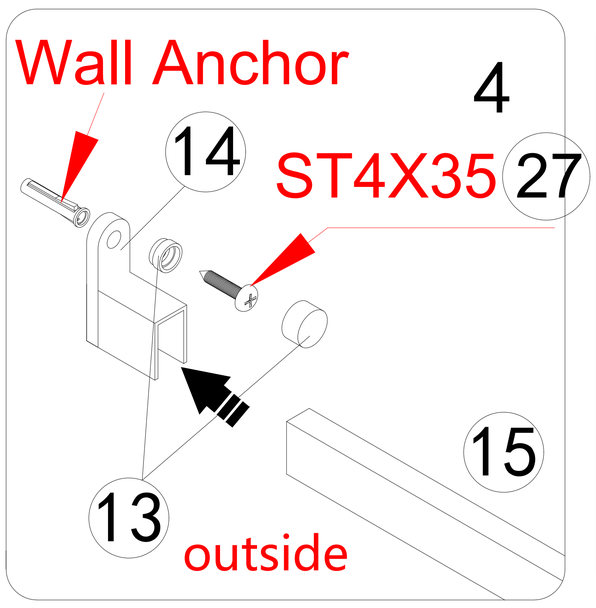

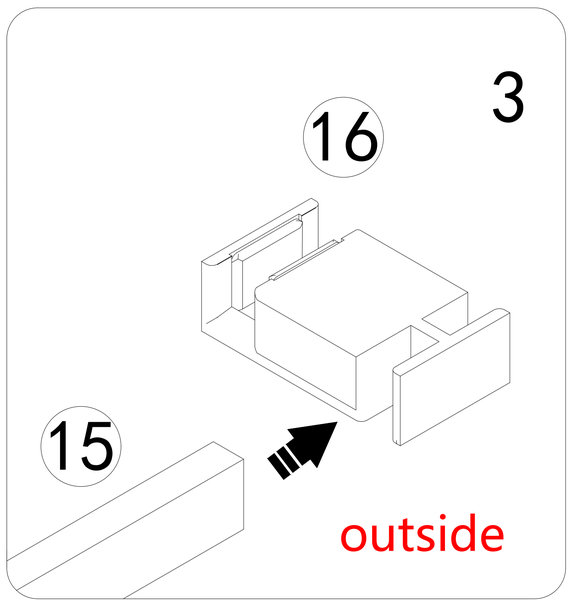

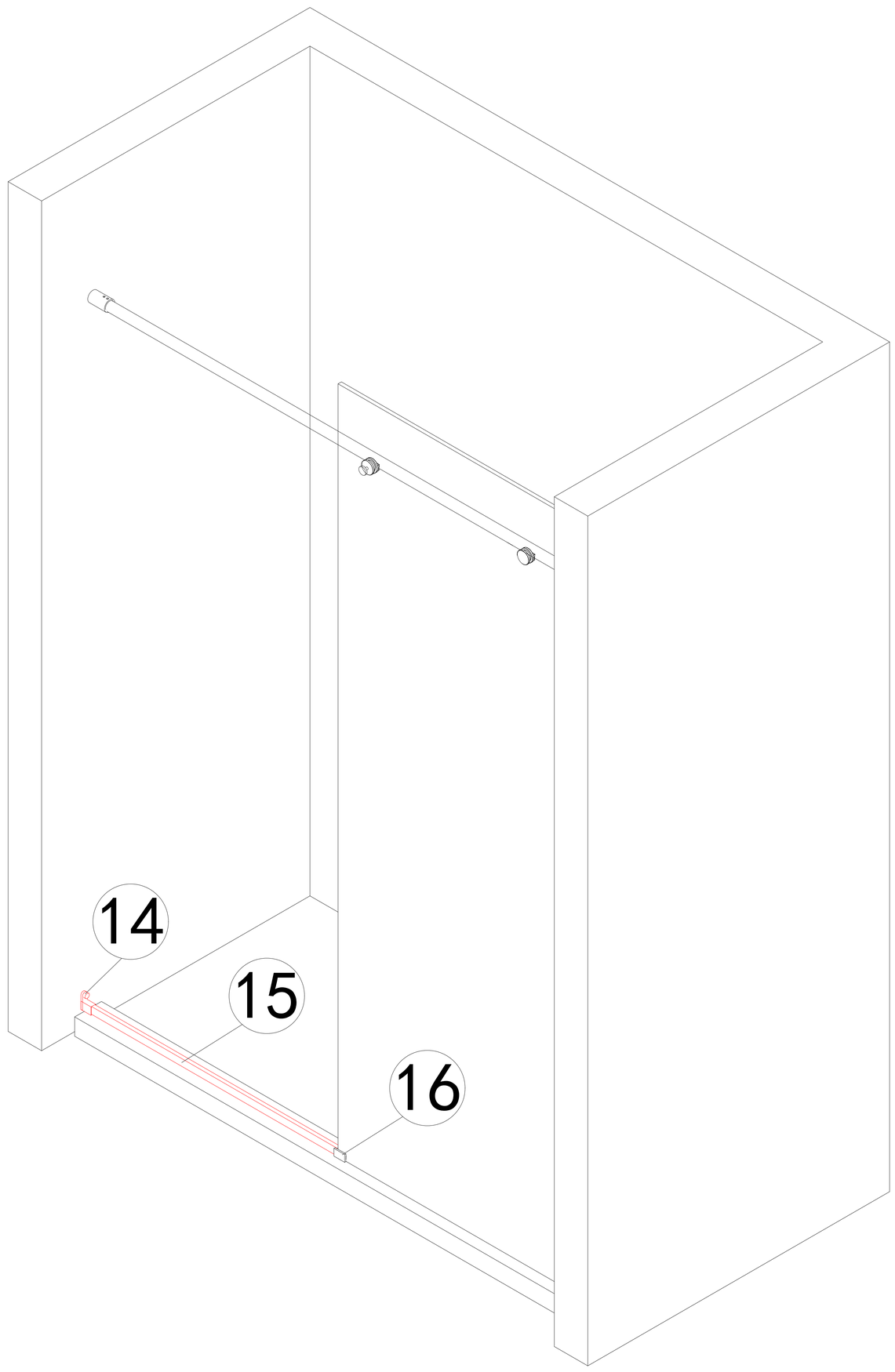

1.Measure the distance from the slot of the Sliding block 16 to the wall surface
2.Cut the Base bar 15 to fit if needed.
3.Insert one end of the Base bar 15 into the gap of Sliding block 16 .
4.Insert the other end into the Bottom Rail Wall Connecting Part 14 ,use 4*35 screw 27 ,fixed to the wall with wall decoration cover 13 .

STEP 6-24

(Right Hand Assembly)

Install the sliding panel 10

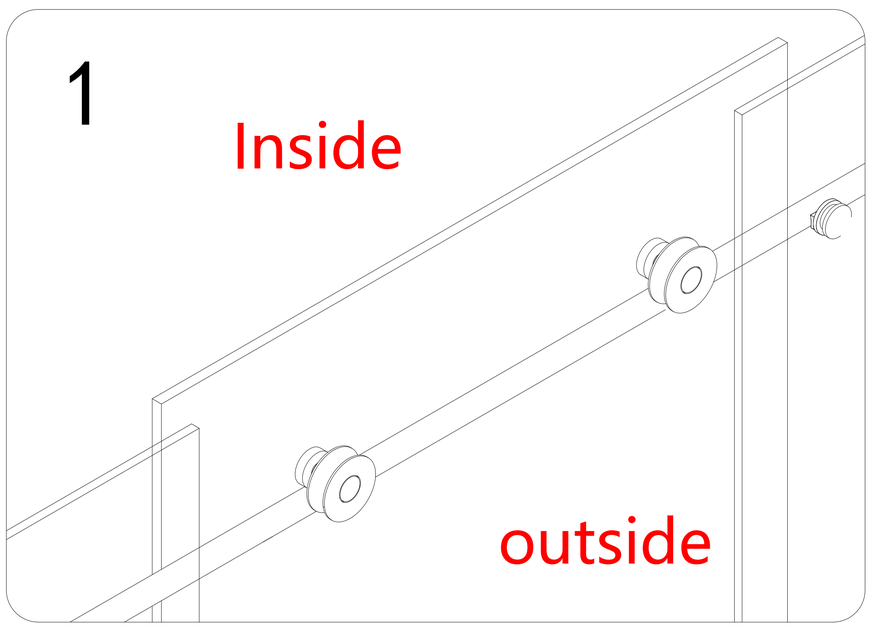

1.Hang the sliding panel (10) on the top rail (4) .

2.Make sure the bottom of the sliding panel (10) loaded into the sliding block (16) .

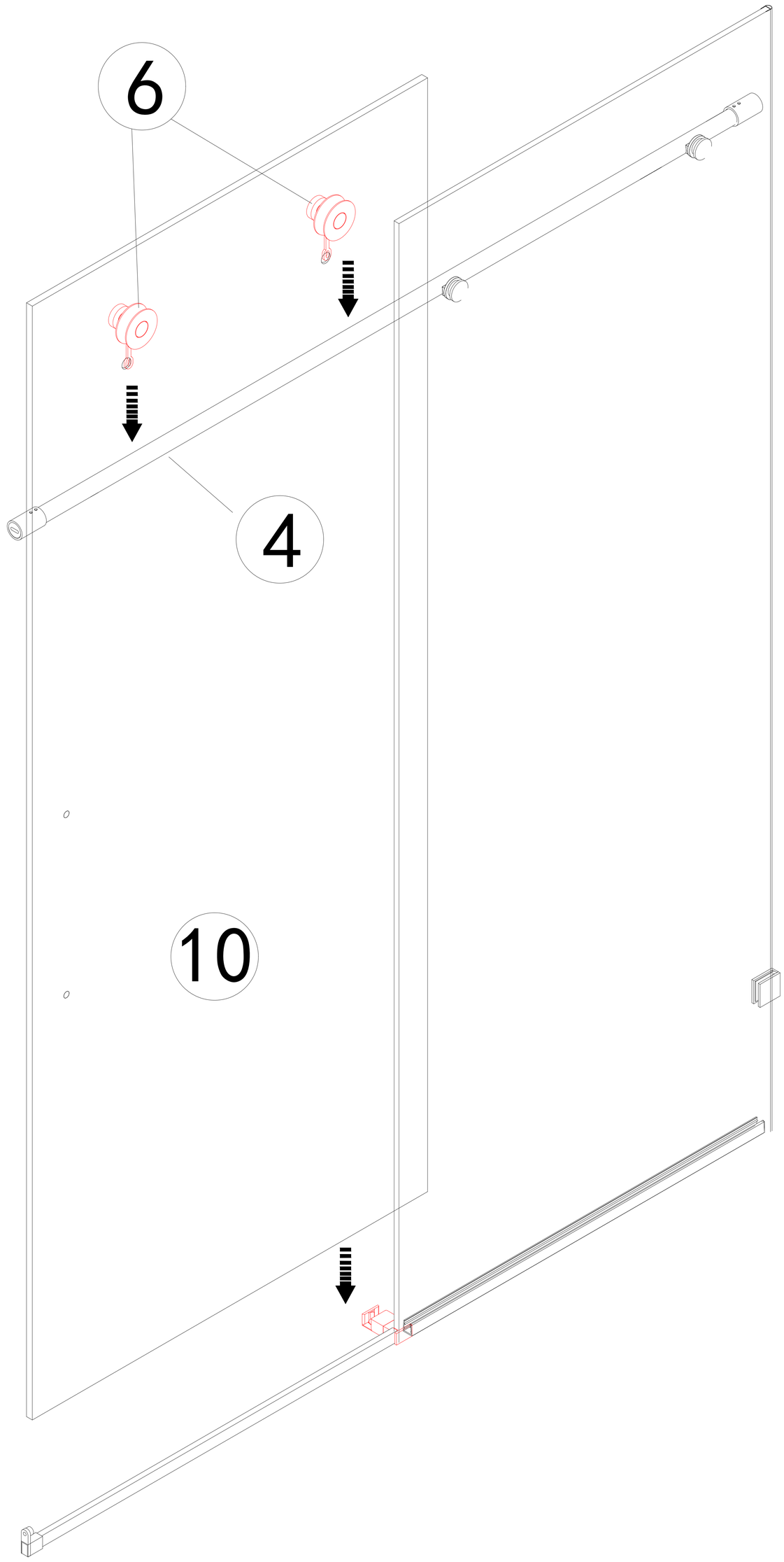

STEP 6-25

(Right Hand Assembly)

Install the Anti-Jumper (8) on the sliding panel (10)

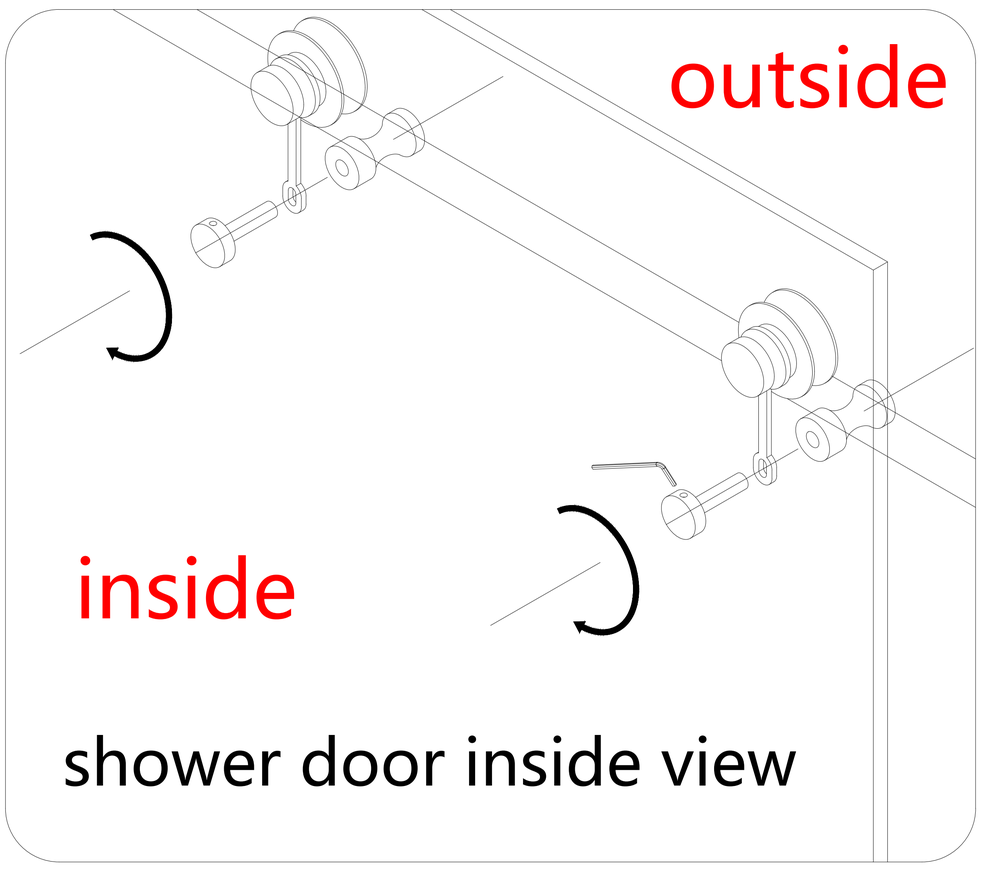

shower door inside view

1.Install the Anti-Jumper (8) outside the sliding panel (10) .
2.Use 2.5mm Allen wrench to tight inside.

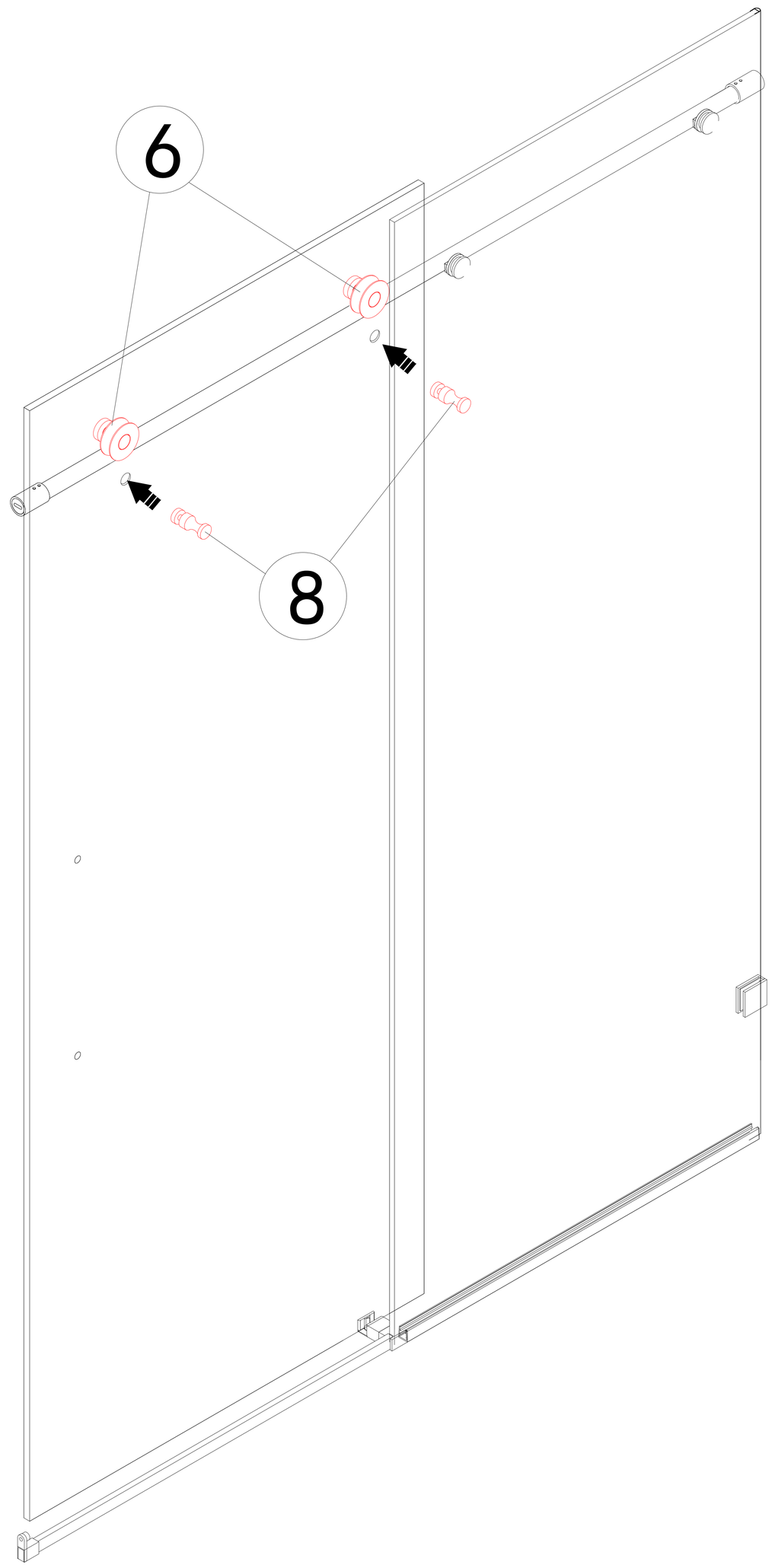

STEP 6-26

(Right Hand Assembly)

Adjust the height of the sliding panel (10) to ensure it is parallel to the wall surface

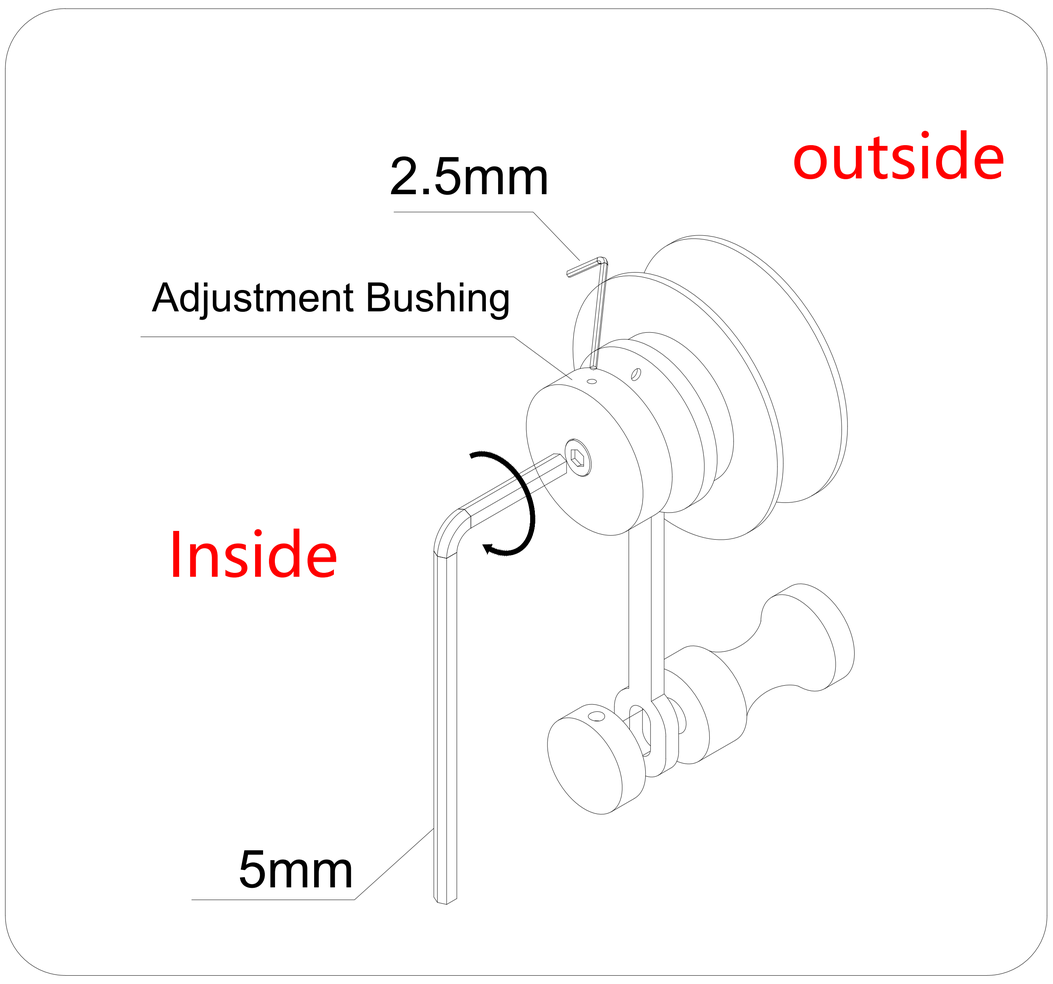

1.Use 2.5mm Allen key to rotate the eccentric shaft of the roller, adjust the height of the sliding panel.
2.Use 5mm Allen key to tight the roller.

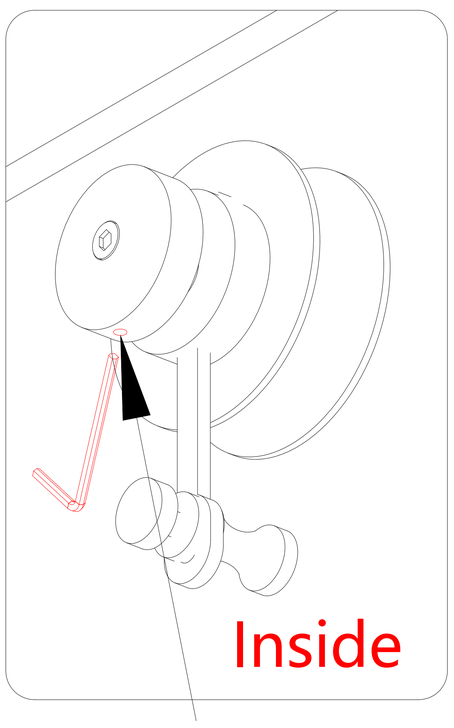

When the position of the small hole is facing upwards, the height of the sliding panel (10) is the lowest

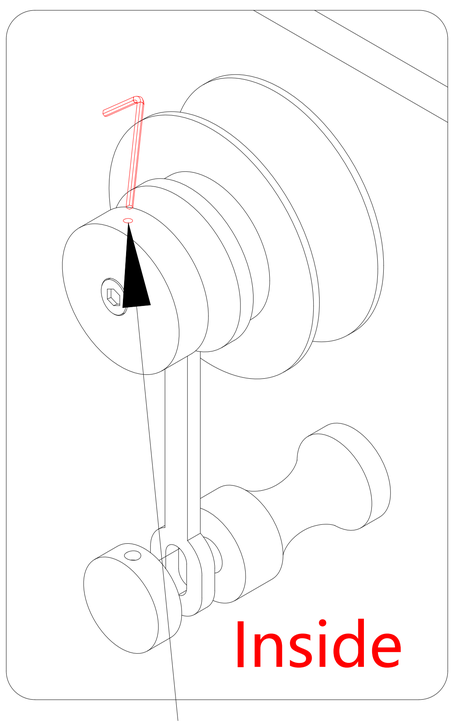

When the position of the small hole is facing downwards, the height of the sliding panel (10) is the highest

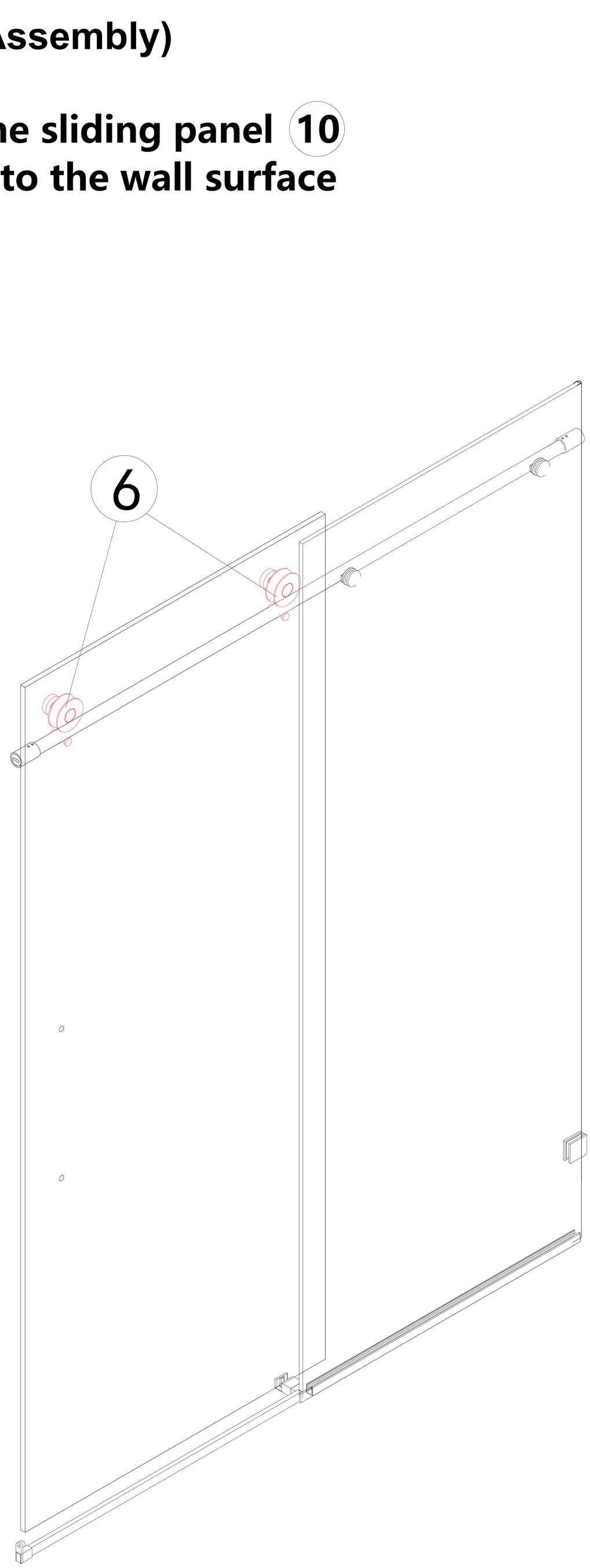

STEP 6-27

(Right Hand Assembly)

Install the Bumper Strip ⑨ and F-form waterproof strip ⑪ .

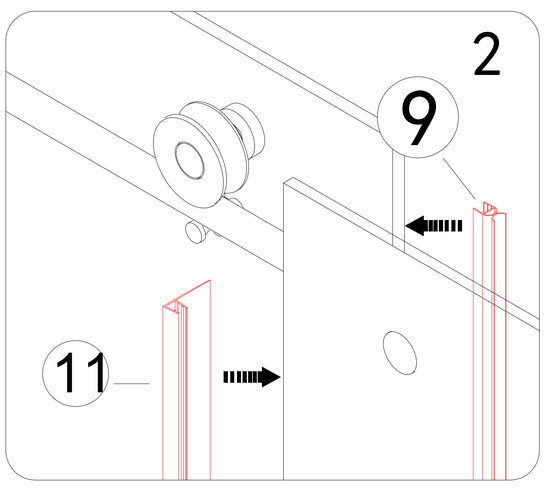

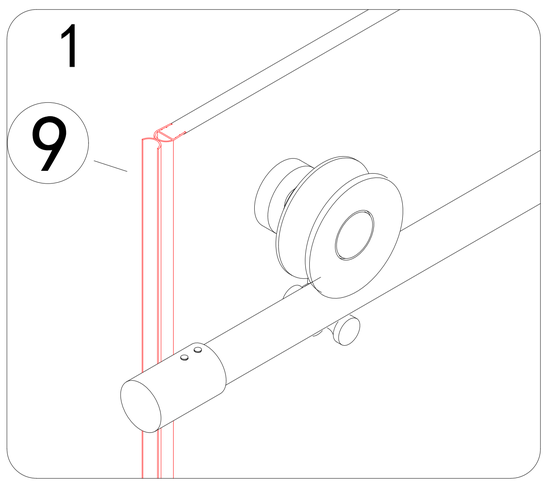

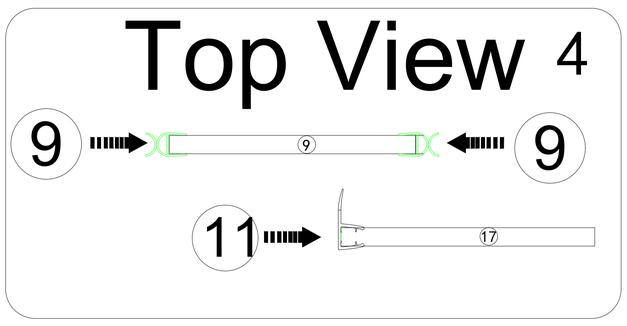

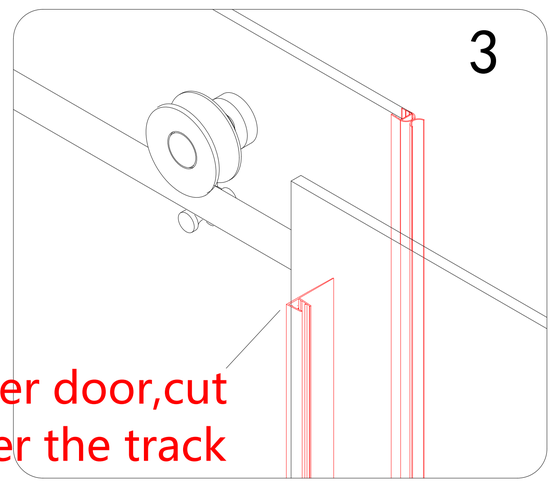

After installing the shower door,cut the waterproof strip under the track

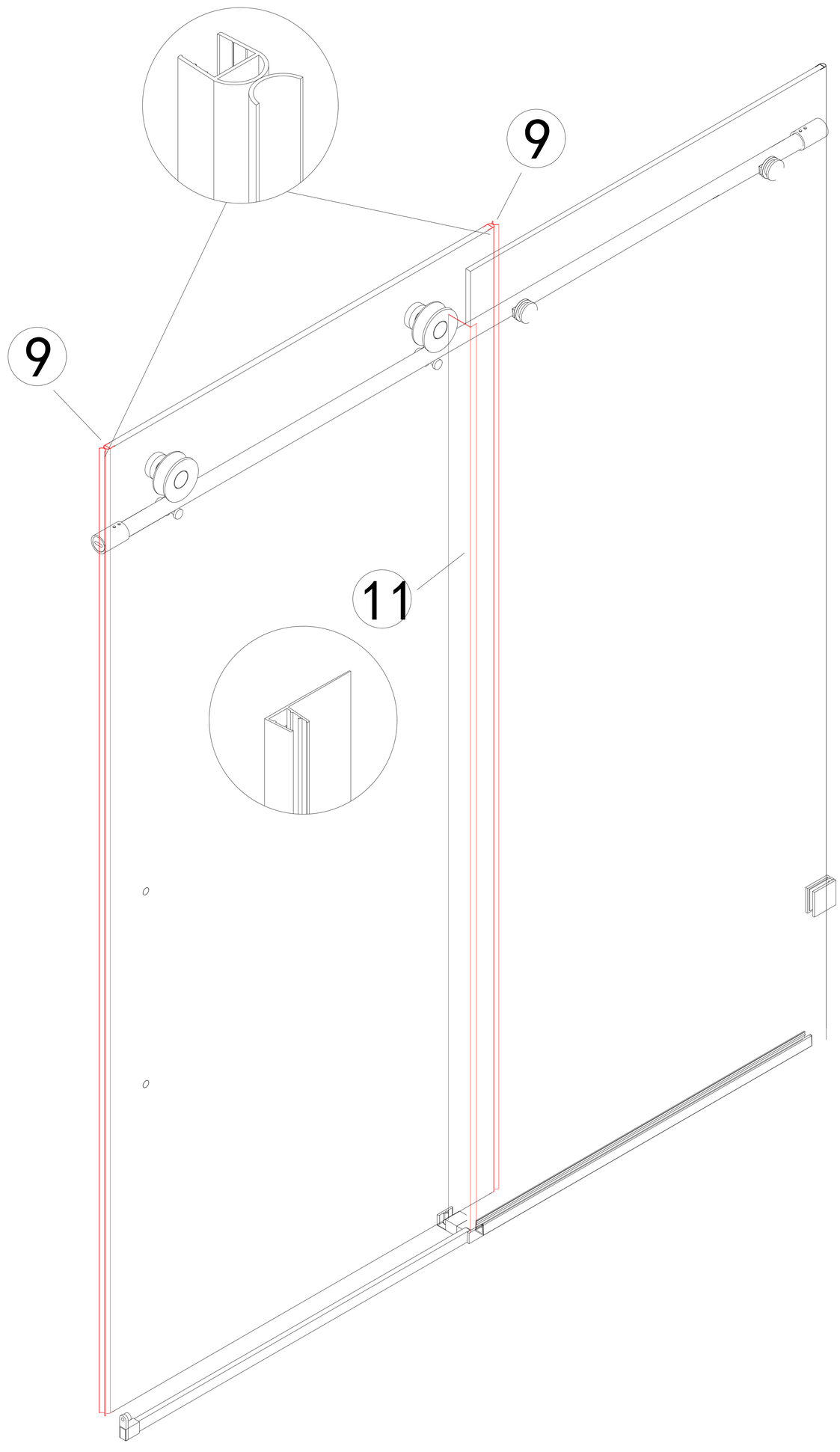

STEP 6-28

(Right Hand Assembly)

Install the Handle 12 .

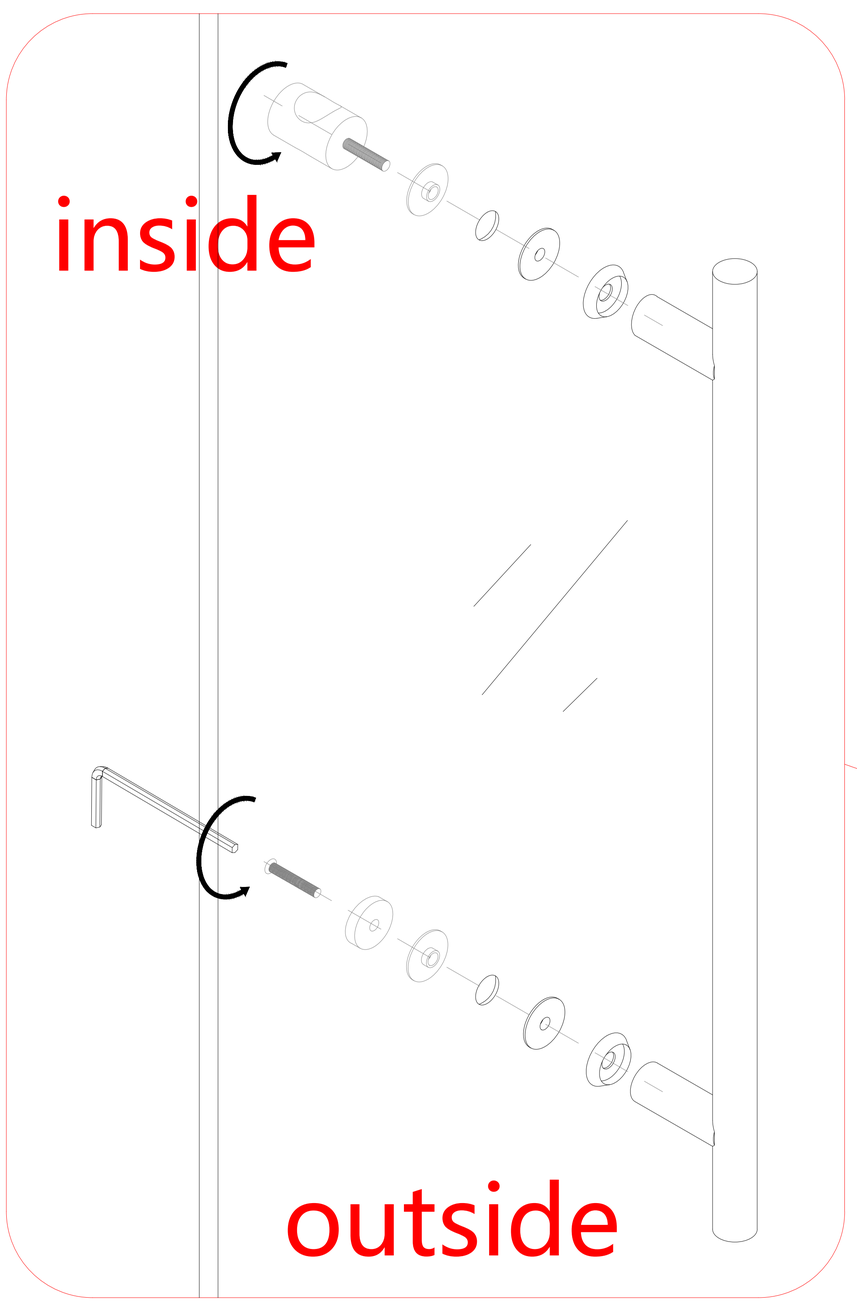

Use 2.5mm Allen wrench to tight.

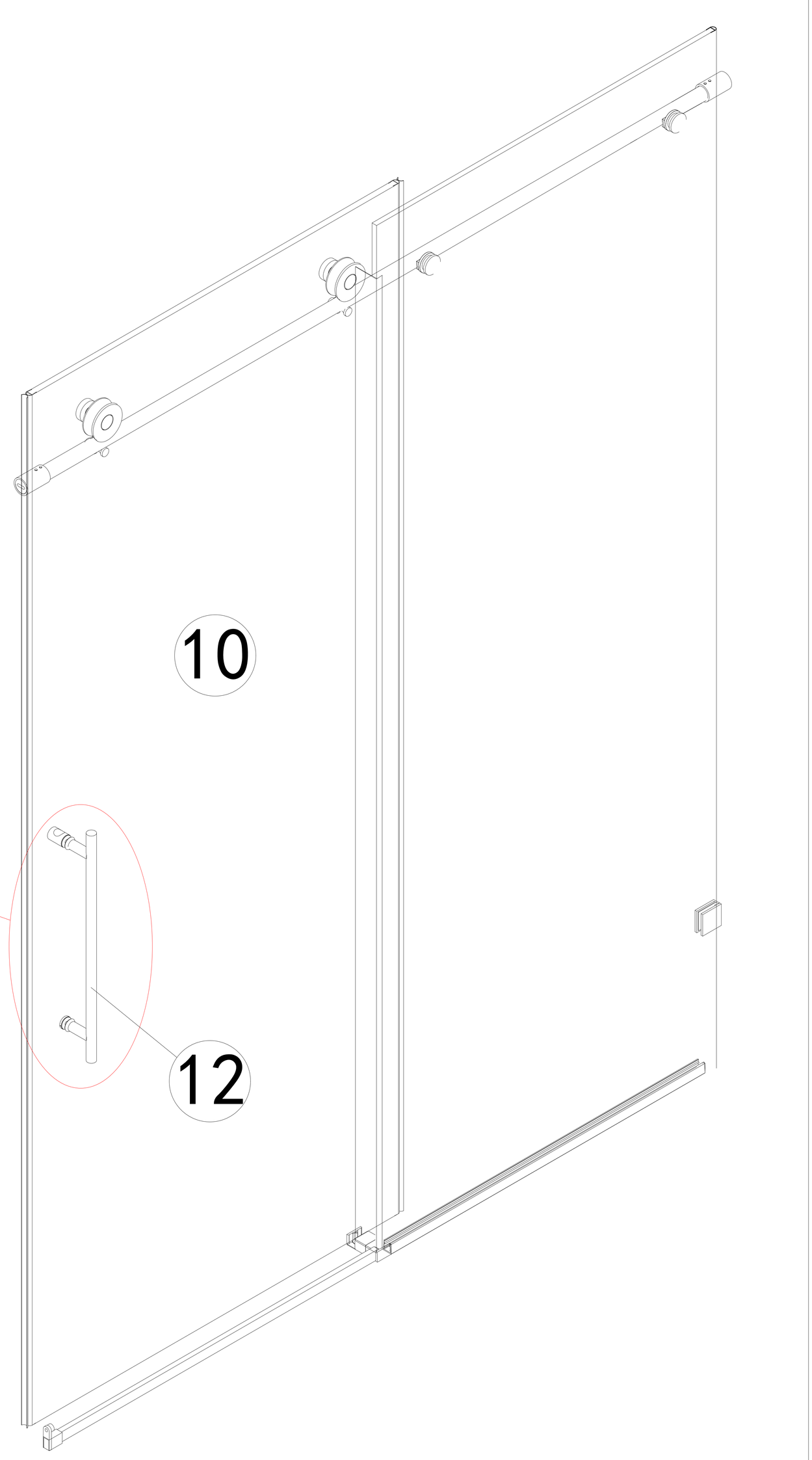

STEP 7

If the buffer clamp (28) of the Soft Closing Mechanism (5) is found to be damaged during subsequent use, please follow the steps below to replace it with the parts

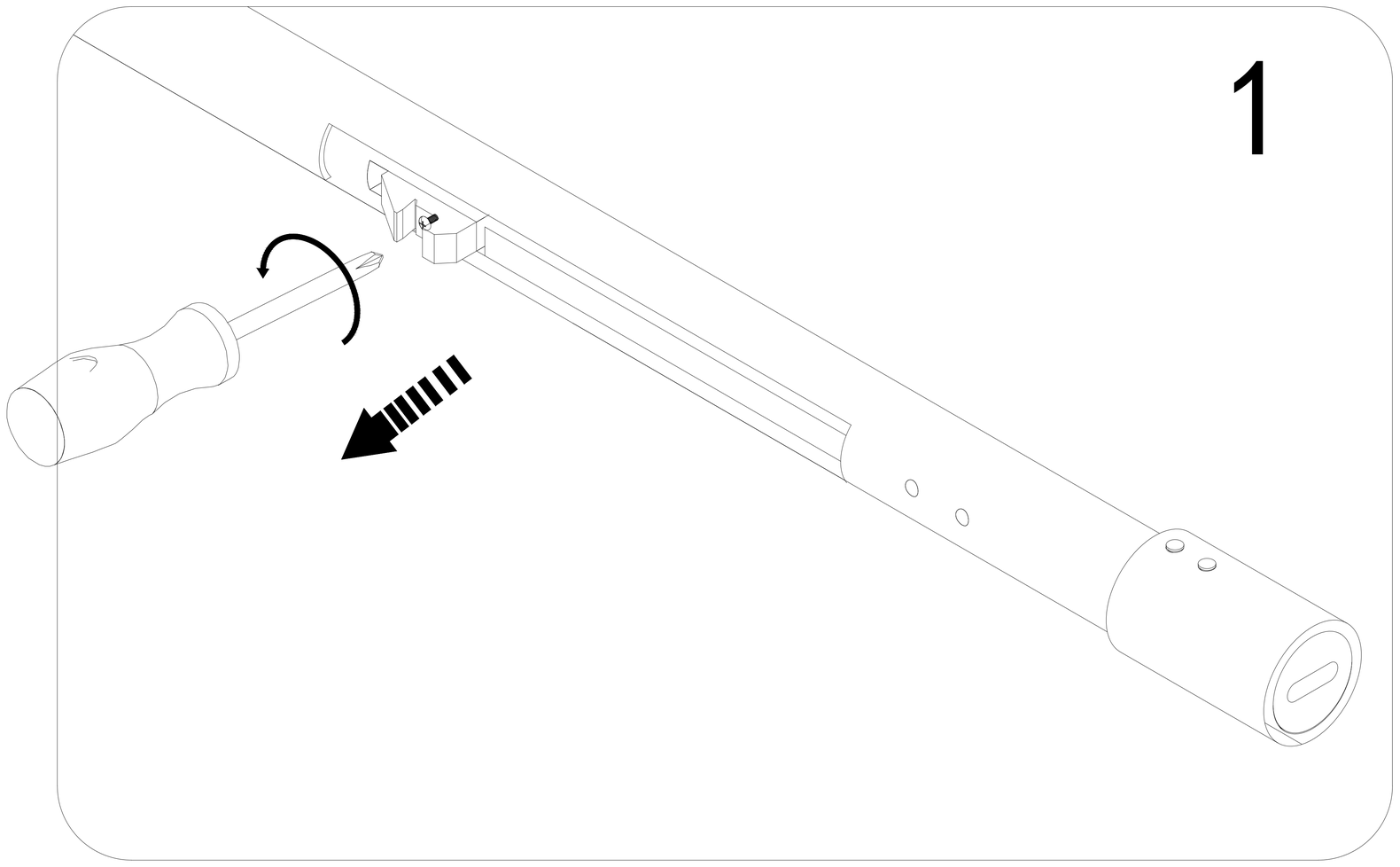

1. Unscrew the fixing screws and remove the old buffer clamp

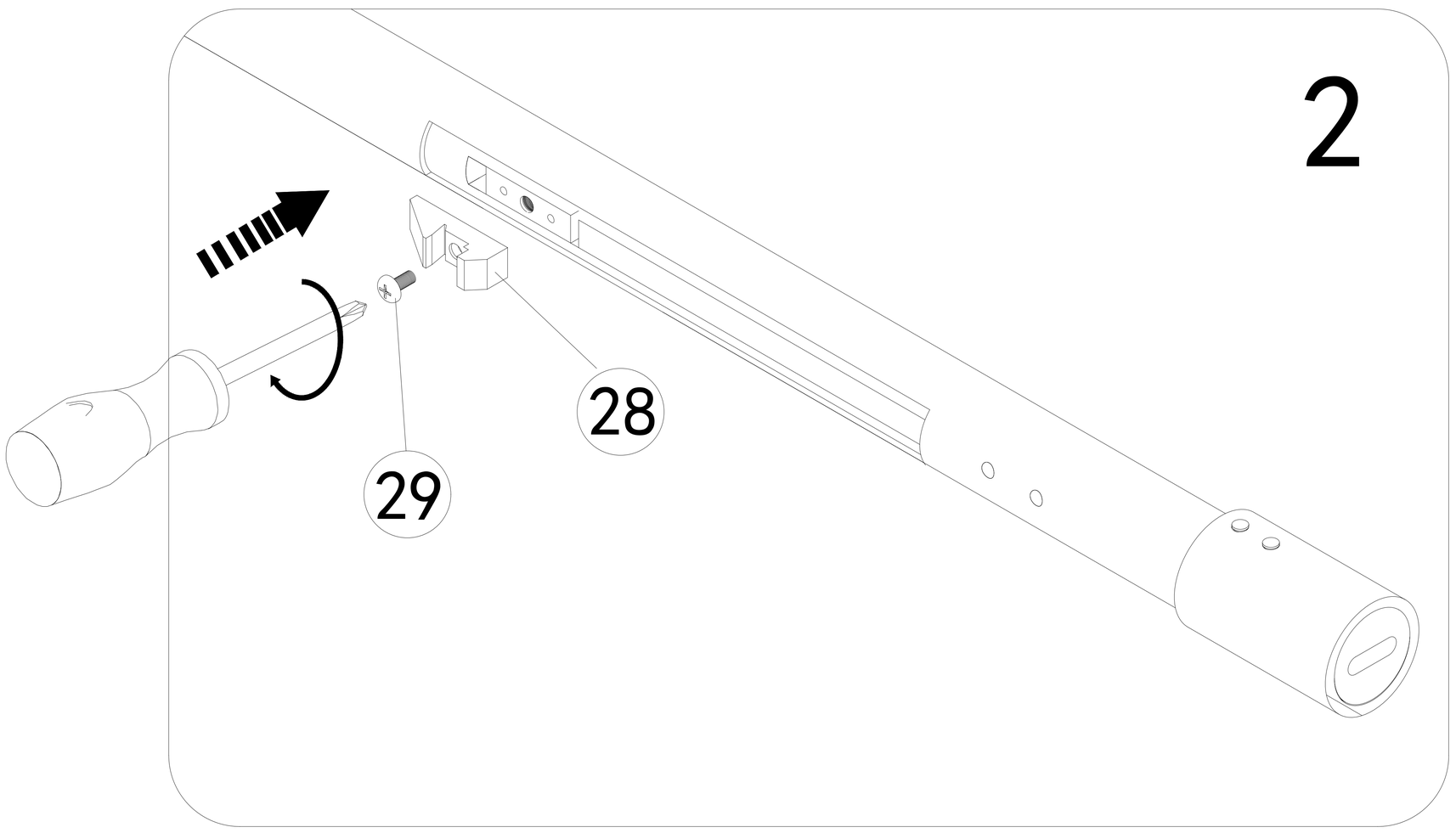

2. Use the removed fixing screws or 3X7 screws (29) from the spare parts to install the new buffer clamp (28)

SEALING

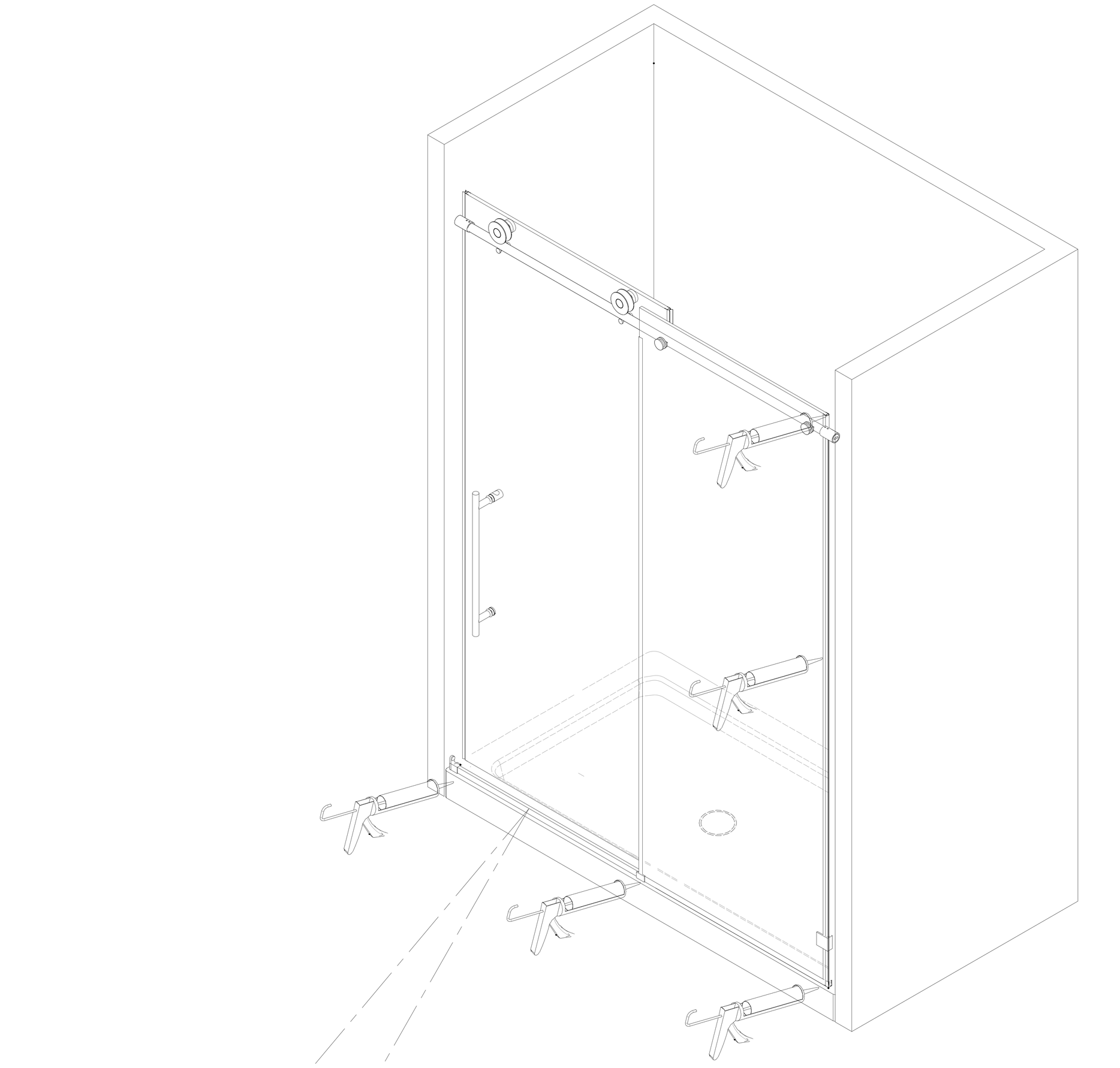

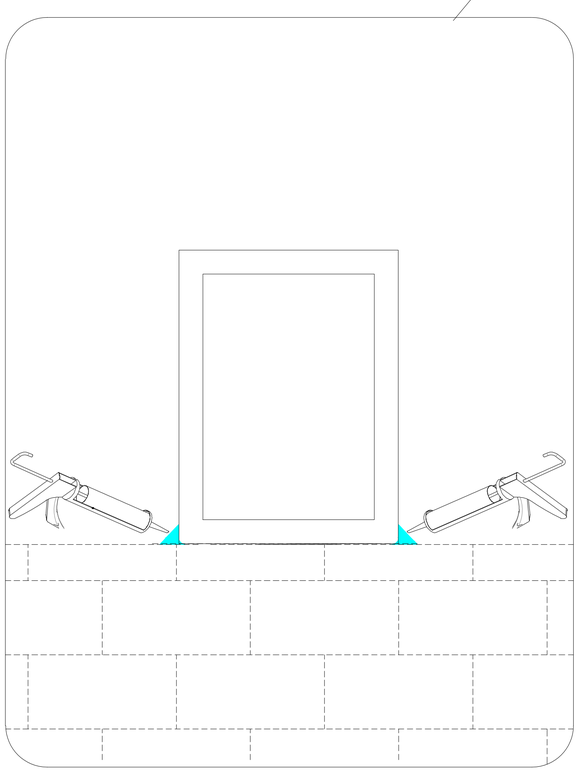

Apply glass glue on both sides of the bottom rail

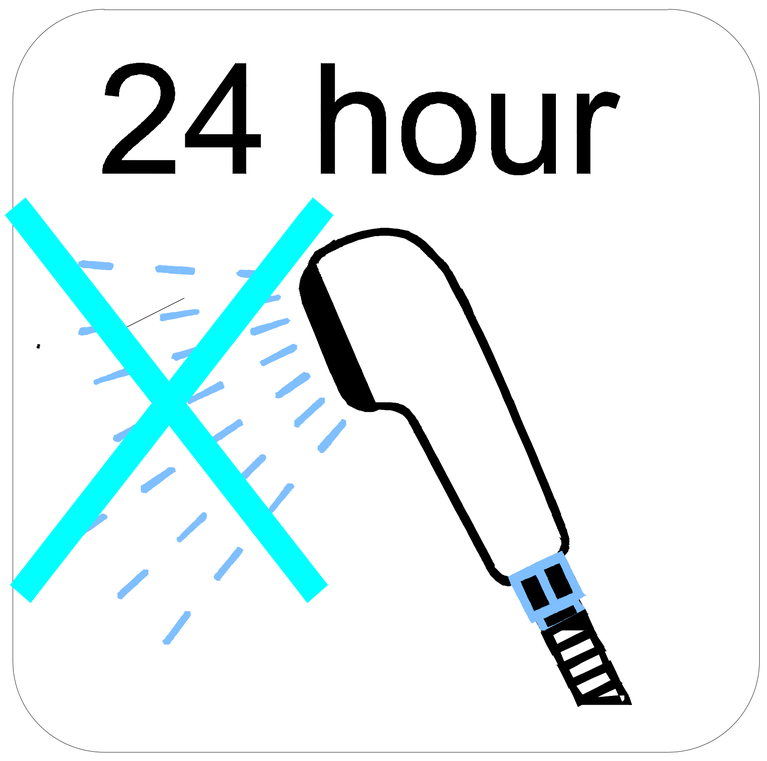

Wait for the glass glue to dry for 24 hours before using the shower door