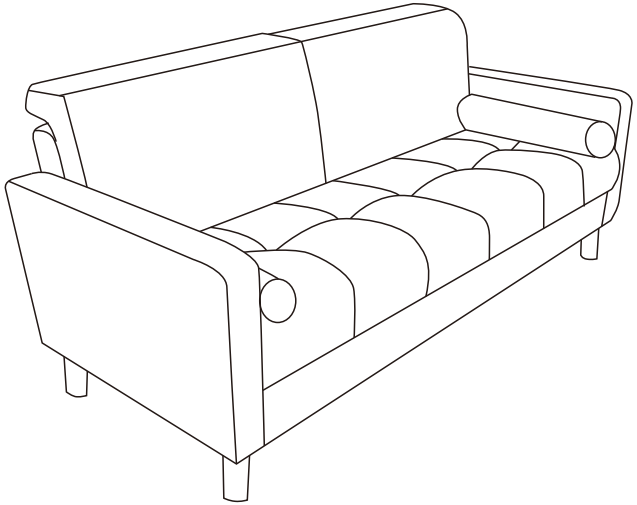

STEP9: Assembly completed.

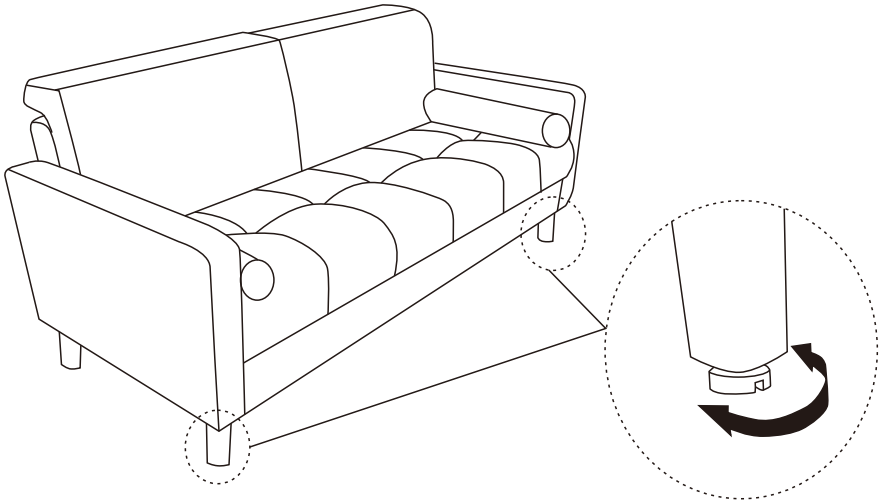

⚠ **Adjust the adjustable levelers at bottom of the front legs to keep the sofa balanced.**

ASSEMBLY INSTRUCTIONS

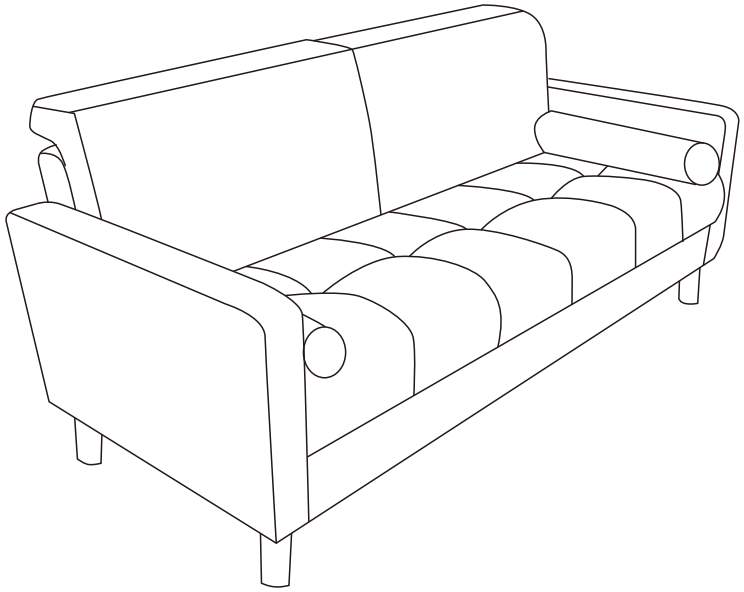

ITEM NO. :ZH1810-ZH1811

NOTE:

This brochure contains IMPORTANT safty info. Please and keep for future reference.

PARTS
LIST

Ax1

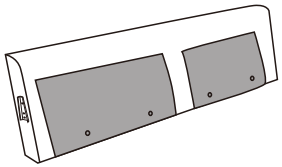

Back frame

Bx1

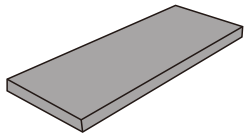

Seat frame

Cx1

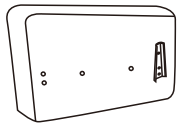

Left armrest

Dx1

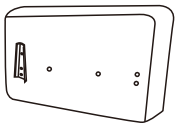

Right armrest

Ex1

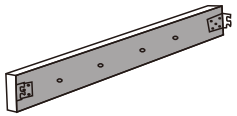

Front rail

Fx2

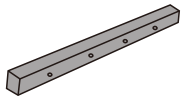

back and front rail bar

Gx2

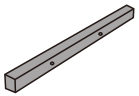

Side rail bar

Hx2

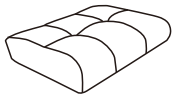

Seat cushion

Ix2

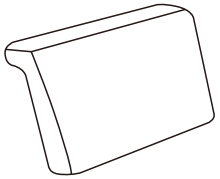

Back cushion

Jx2

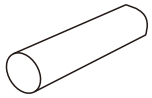

Round throw pillow

Kx2

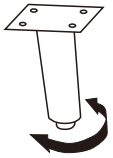

Front leg (Adjustable)

Lx2

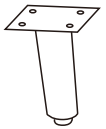

Rear leg

HARDWARE&TOOL
LIST

①x12



M6*45mm Bolt

②x16



M6*16mm Bolt

③x4



M8*20mm Bolt

④x12



Washer

⑤x1



Allen Key

SPARE

①x1

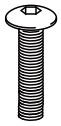

M6*45mm Bolt

②x1



M6*16mm Bolt

③x1



M8*20mm Bolt

④x1



Washer

Be sure to check all packing material fit the packing list.Carefullyfor small parts, which may have some loose inside the carton during shipment.

ASSEMBLY
INSTRUCTIONS

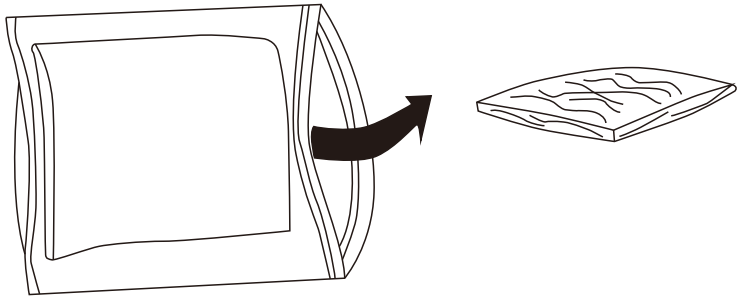

STEP1: Take the back cushions and seat cushions from the vacuum bags,let them expand for a while.

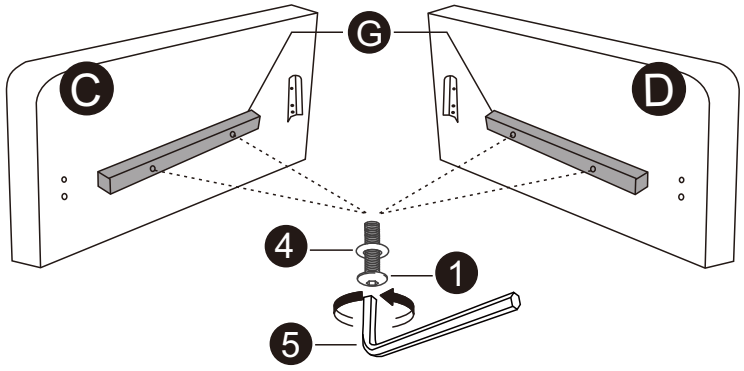

STEP 2: Attach the side rail bars (G) to the armrests(C,D) with bolts (1),washers(4)and allen key(5)

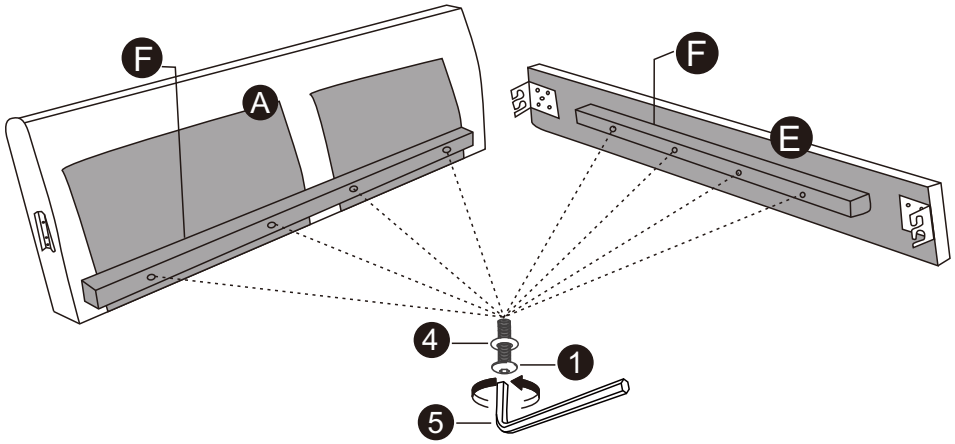

STEP 3: Attach the back and front rail bars (F) to the back frame (A) and front rail (E)with bolts (1),washers (4)and allen key(5)

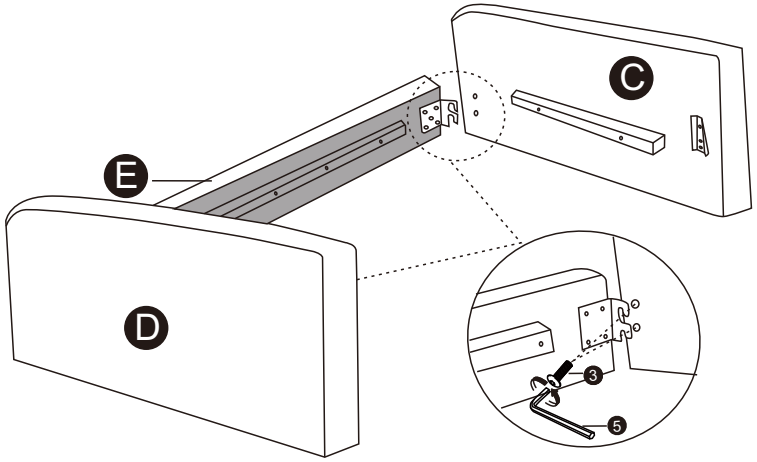

STEP4: Attach front rail (E)to armrests (C,D) with bolts (3) and allen key (5).

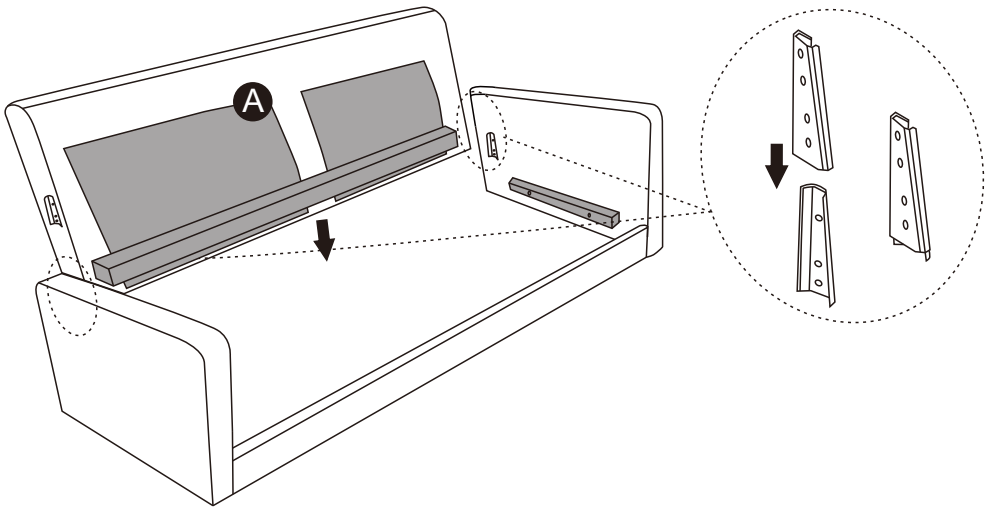

STEP 5: Attach backrest (A) to armrest, Insert both connectors at the same time, push hard to connect fully.

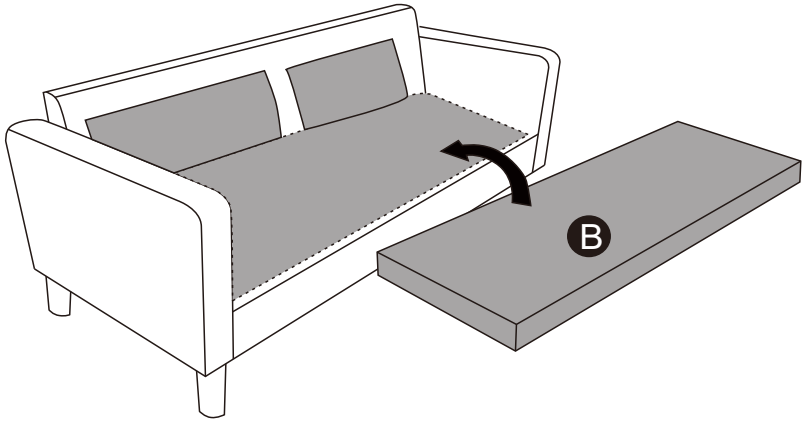

STEP7: Place seat frame onto the rails.

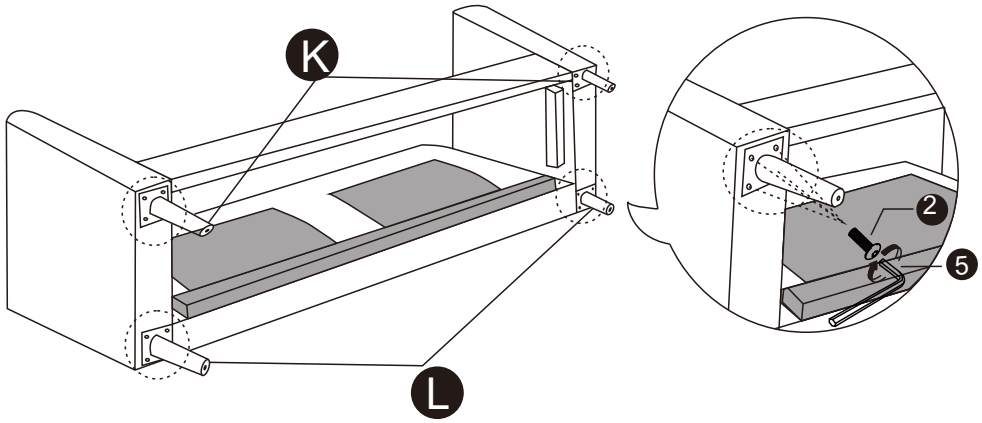

STEP6: Attach legs(K,L) to bottom of armrests with bolts(2)and allen key(5).*The foot pads on the front legs (K) are adjustable.*

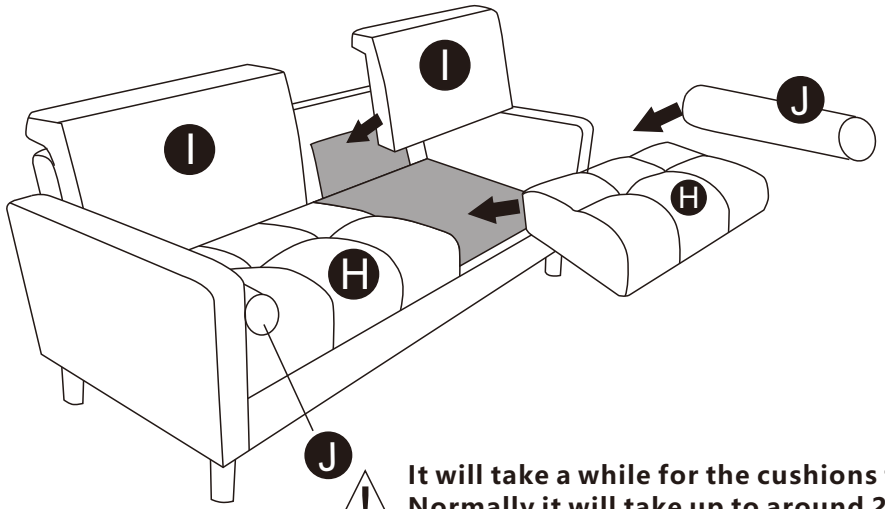

It will take a while for the cushions to expand. Normally it will take up to around 24 hours to expand to its full size.

STEP 8: Place seat cushions and back cushions on the seat frame and backrest, then place round throw pillows on seat cushions.