Corner Glass Cabinet(Crown)

Assembly Instruction

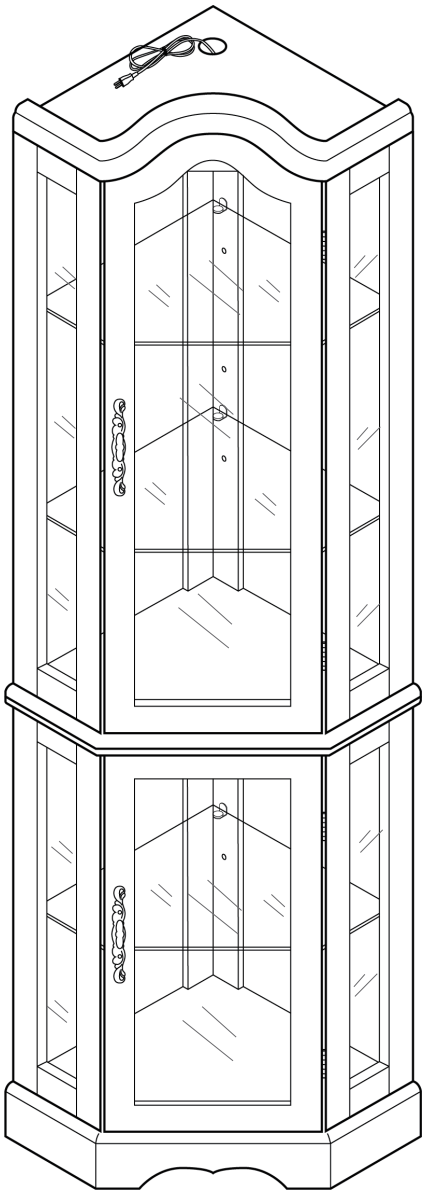

Estimated time for assembly:

100 mins

LB

Weight limitations are as follows:

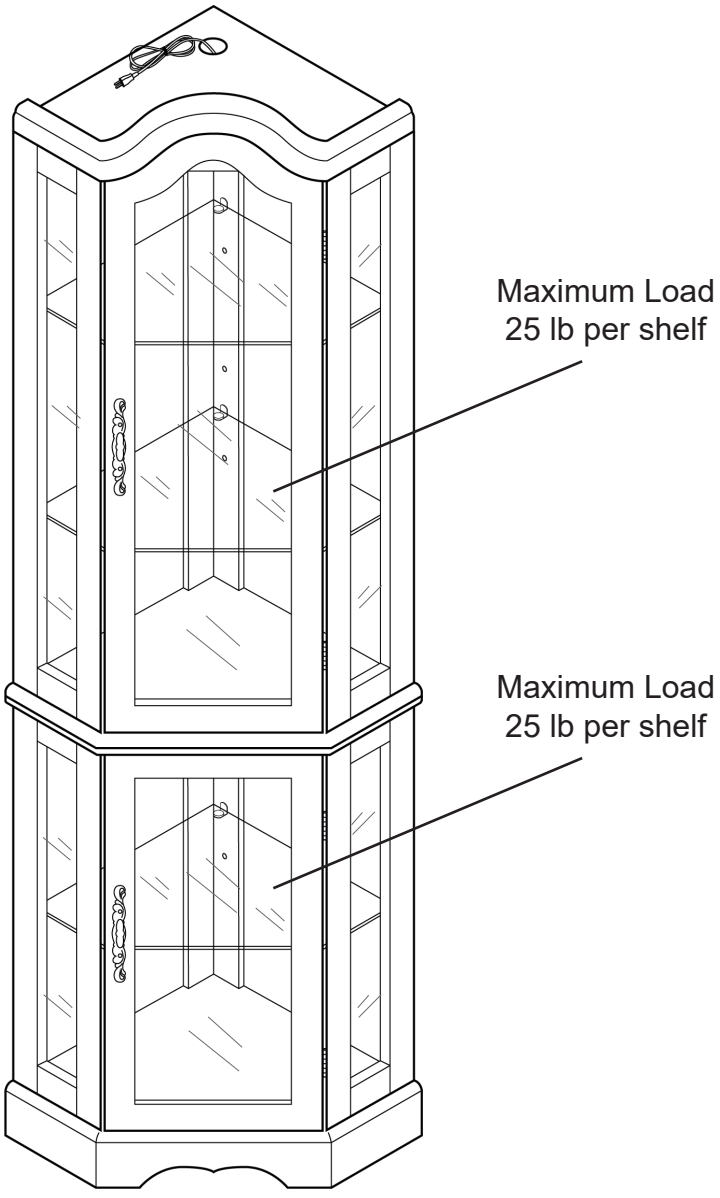

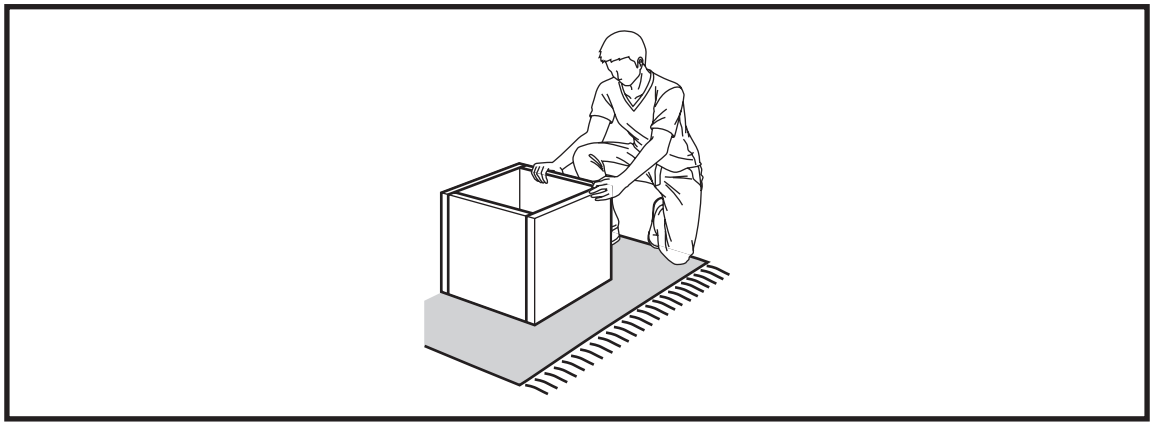

Assemble the furniture on an empty carton, carpet, or rug to prevent scratches or damage.

For safety, please keep pets and children away from the assembly area.

Ensure the product is fully assembled before use. If you are missing any hardware or products, do not use it until you have restored the missing parts.

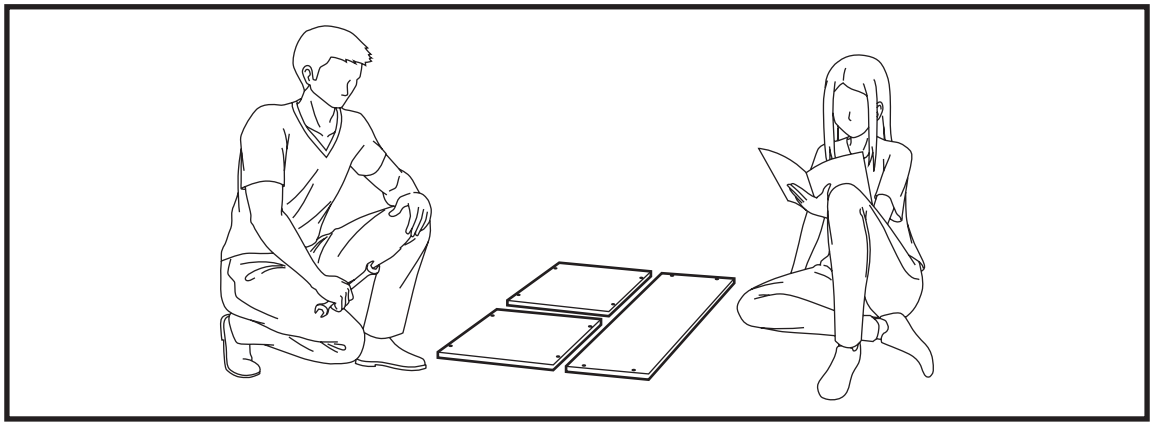

This furniture requires 2 people for assembly.

Read this instruction manual prior to assembly to familiarize yourself with the various steps.

Lay out all components and hardware separately on a flat surface and make sure that no parts are missing or damaged before assembly. Do not destroy or discard any packaging until you are certain that you have all the necessary parts for assembly.

Hand tight all hardwares and careful not to over tighten to avoid damaging the product.

CAUTION

There are small components used in the construction of this product.
Loose items should be kept away from pets and children to avoid a choking hazard.

Keep all plastic bags and packaging film away from pets and children to avoid suffocation.

PACKAGE CONTENTS

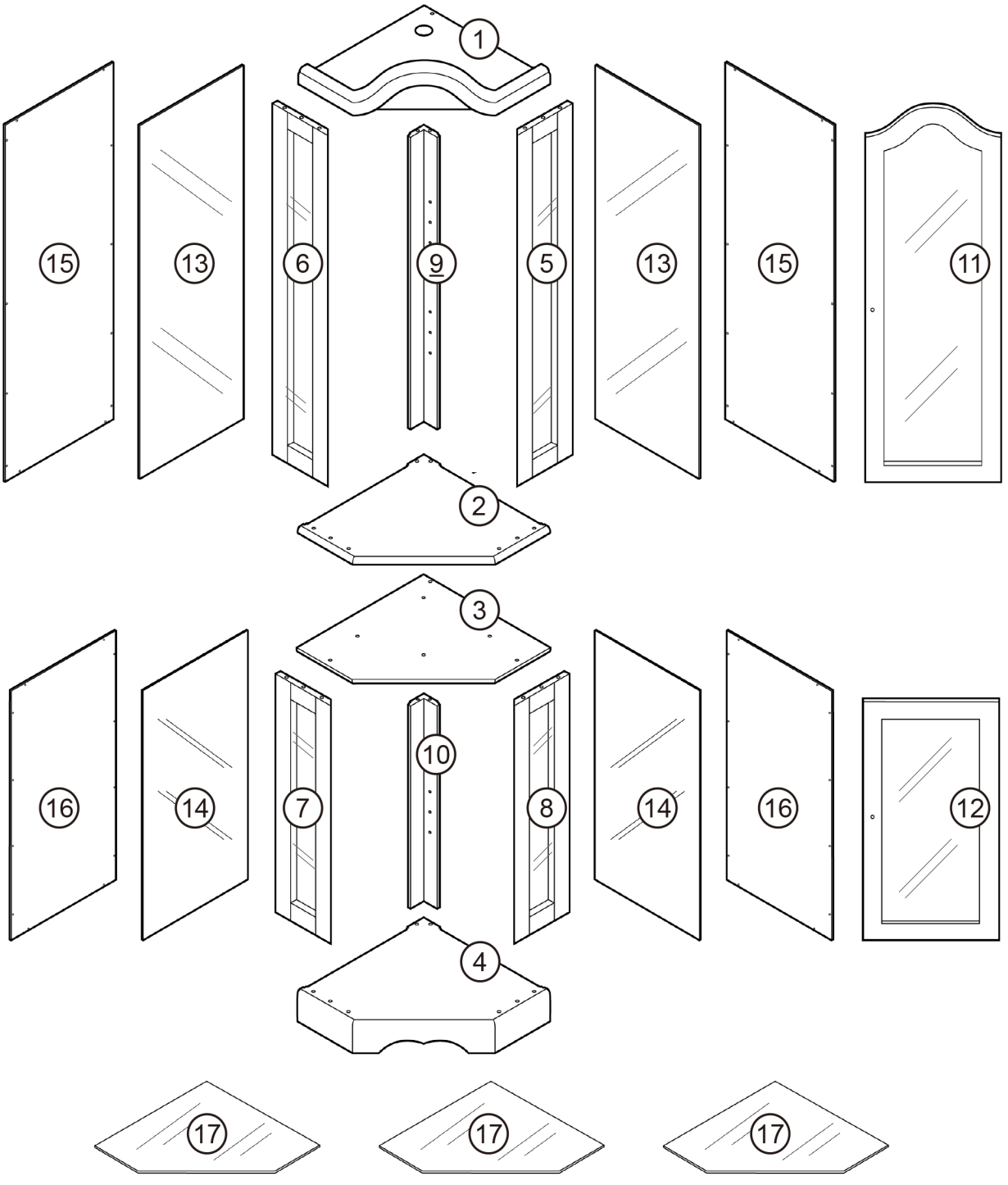

PACKAGE CONTENTS

CODE	DESCRIPTION	QTY
1	Upper Shelf Top Panel	1
2	Upper Shelf Bottom Panel	1
3	Bottom Shelf Top Panel	1
4	Base	1
5	Upper Shelf Right Panel	1
6	Upper Shelf Left Panel	1
7	Bottom Shelf Left Panel	1
8	Bottom Shelf Right Panel	1
9	Upper Shelf Support Bar	1
10	Bottom Shelf Support Bar	1
11	Upper Shelf Cabinet Door	1
12	Bottom Shelf Cabinet Door	1
13	Upper Shelf Mirror Panel	2
14	Bottom Shelf Mirror Panel	2
15	Upper Shelf Back Panel	2
16	Bottom Shelf Back Panel	2
17	Glass Storage Shelf Panel	3

PACKAGE CONTENTS

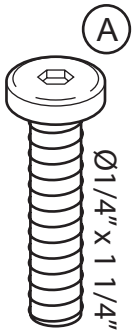

12x + 1x

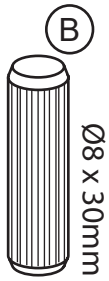

20x + 2x



2x

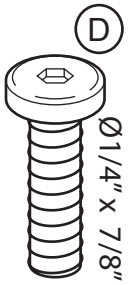

2x

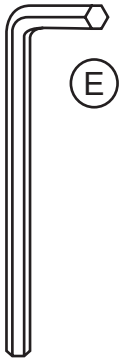

1x

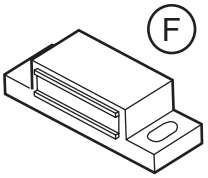

2x

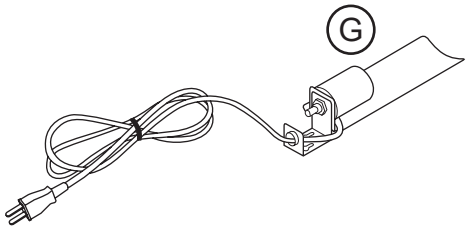

1x



4x



18x + 2x

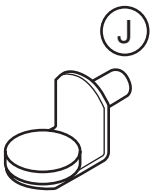

15x + 1x

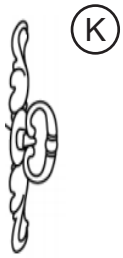

2x



Install all hardware perpendicular to the opening.



2x

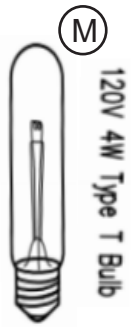

1x

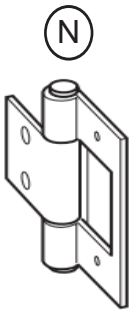

4x



52x + 4x



1x



2x

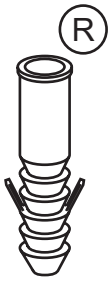

2x



2x

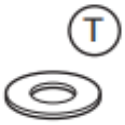

4x

Required tools for assembly (Not included)





1



K 2x

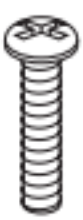

L 2x

Attach door handles to the cabinet doors (11,12).

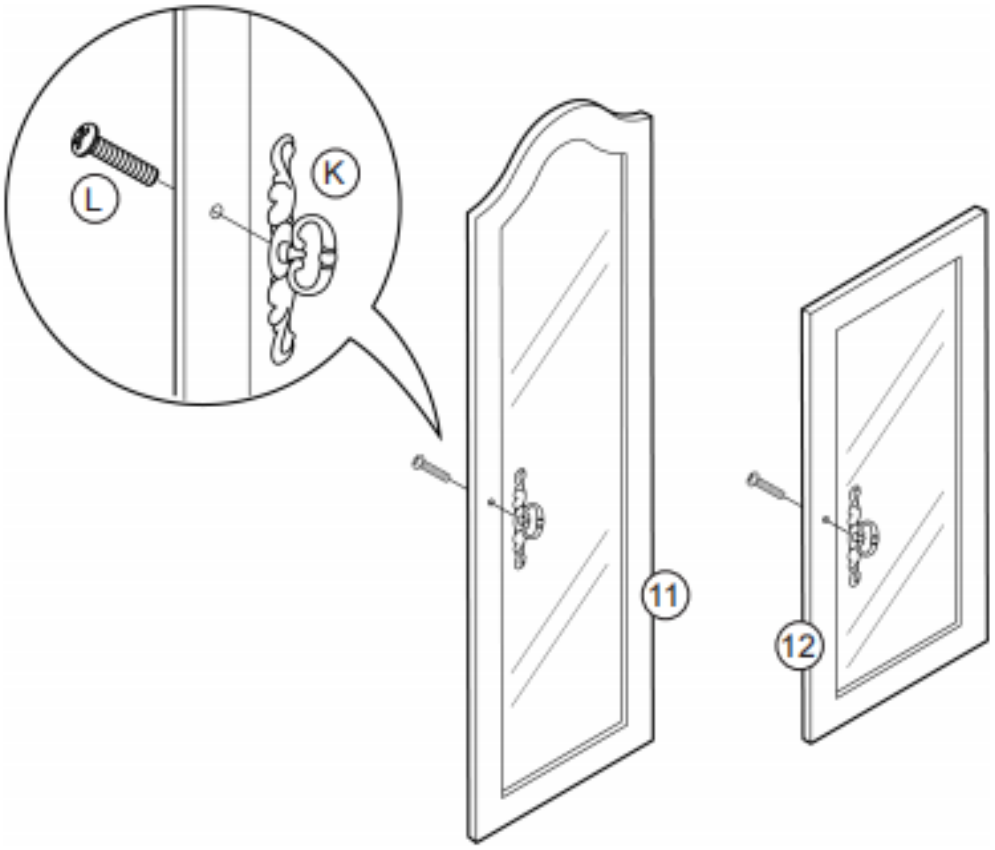

2

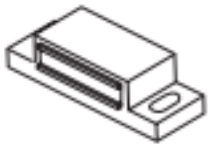

F 1x



H 2x

Attach the magnetic catch to the underside of the upper shelf top panel (1).

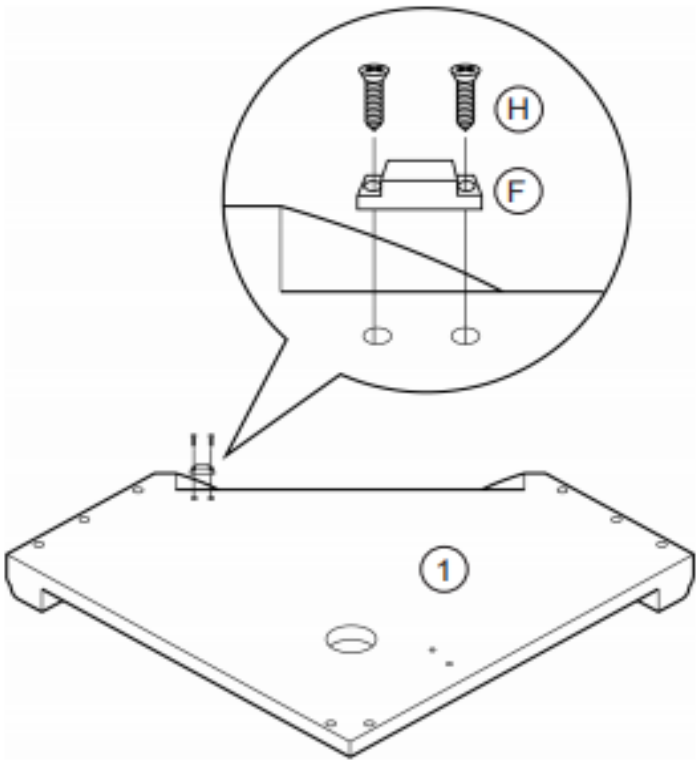

3

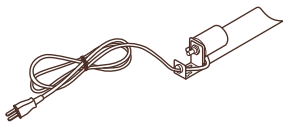

G 1x



Ă3 x 12mm

I 2x



120V 4W Type TBulb

M 1x

Attach the cabinet light socket to the underside of the upper shelf top panel (1).

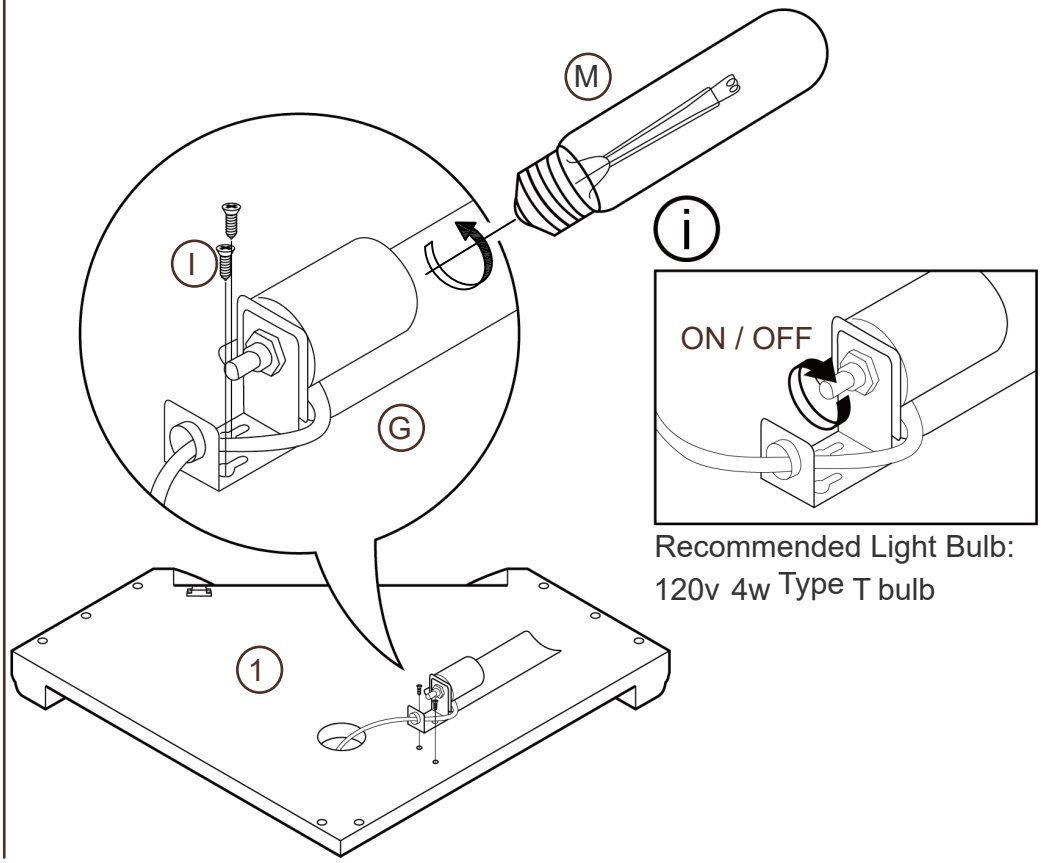

Recommended Light Bulb:
120v 4w Type T bulb

4

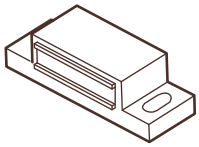

F 1x



Ă3 x 15mm

H 2x

Attach the magnetic catch to the underside of the bottom shelf top panel (3).

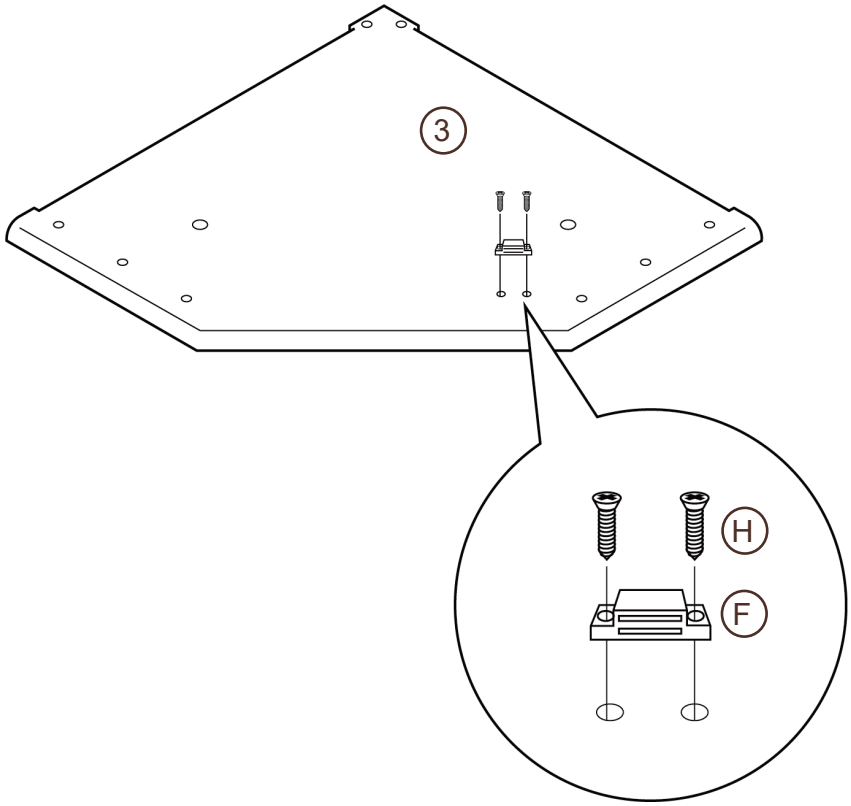

5

Attach the upper shelf left and right panels (5,6) and the upper shelf support bar (9) to the upper shelf bottom panel (2).

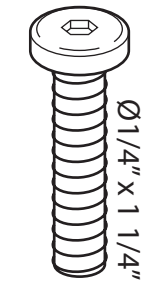

A 3x



B 5x



E 1x

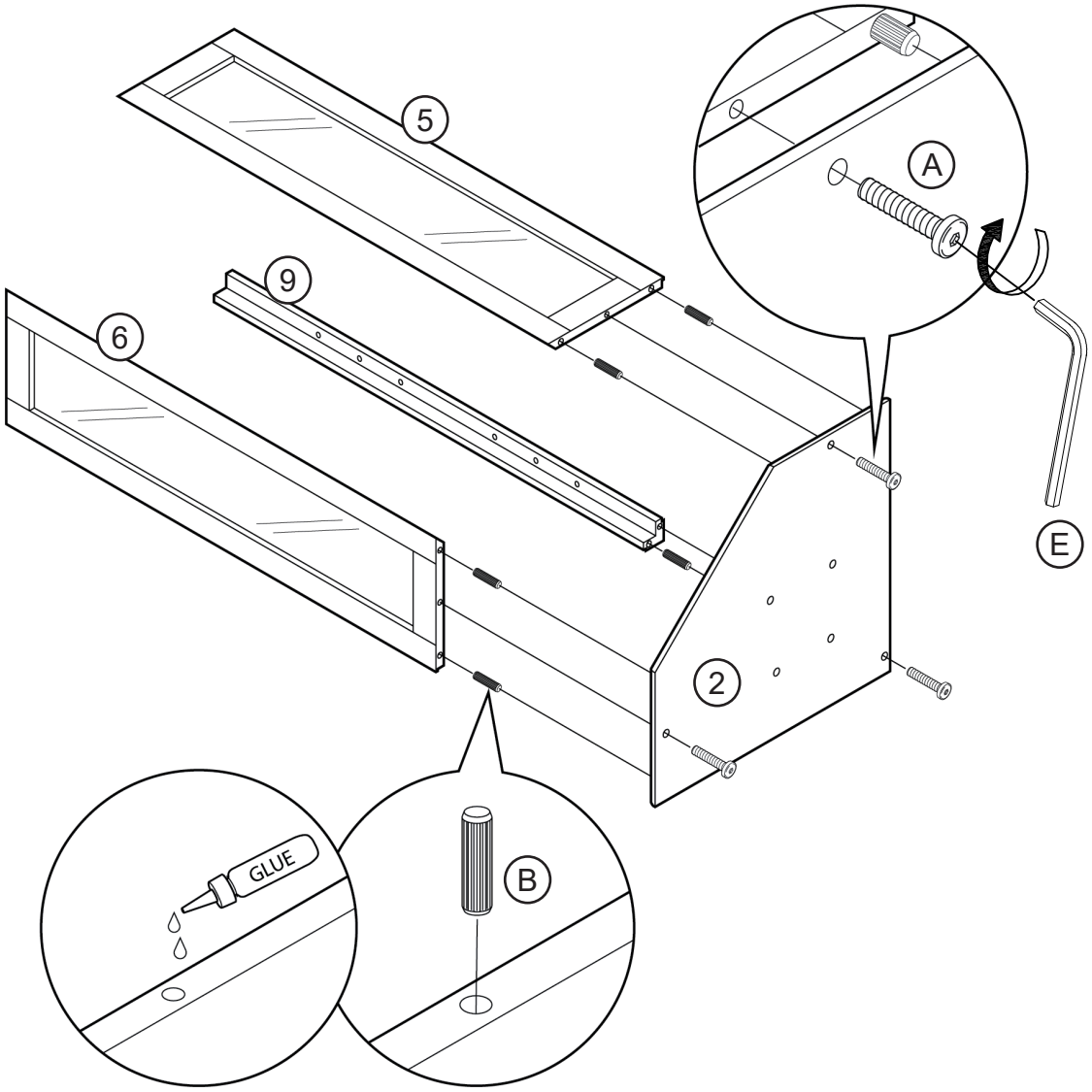

6

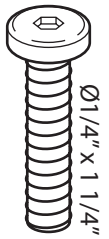

A 3x



B 5x



E 1x

Attach the upper shelf top panel (1) to the upper shelf assembly.

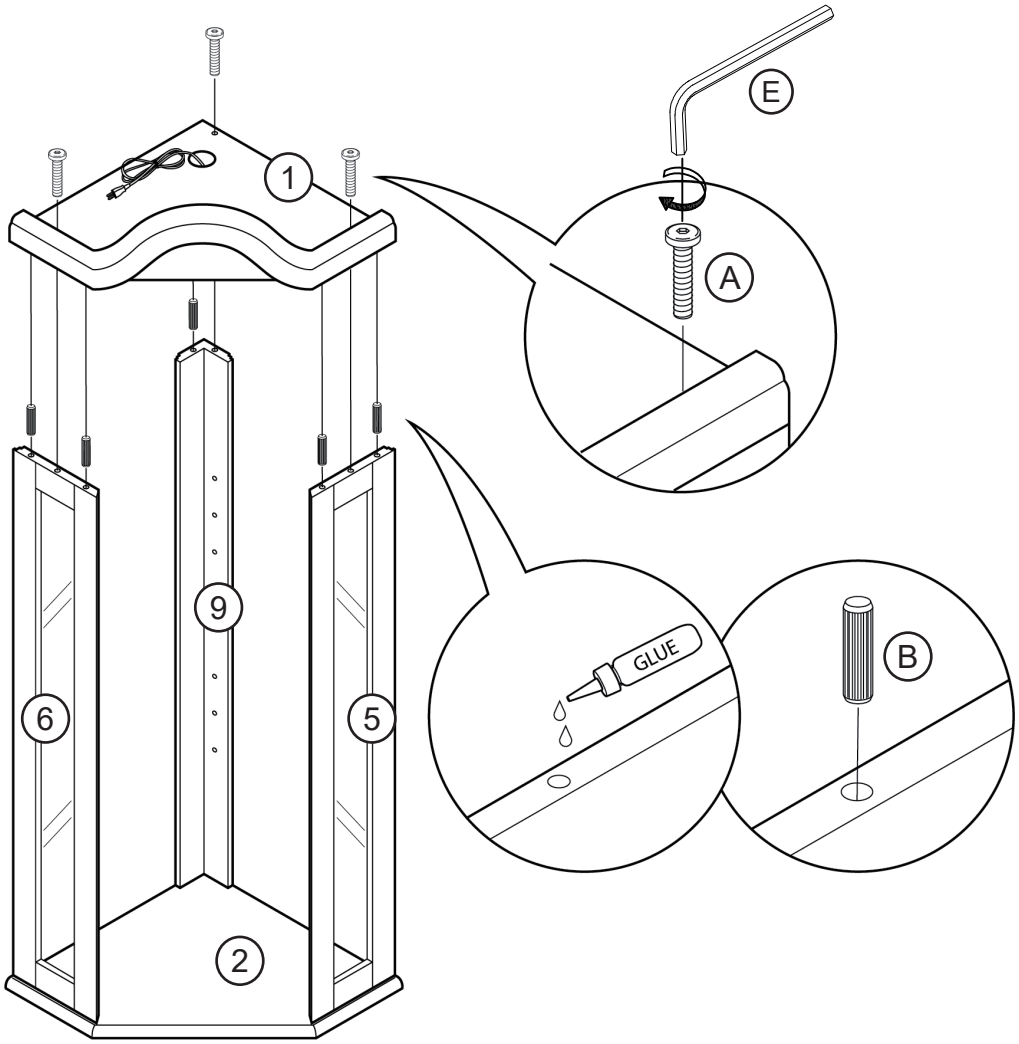

7



O 28x



Q 2x

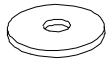

T 2x

Attach the mirror back panels (13) and the back panels (15) to the back of the upper shelf assembly. Attach anti tipping straps to the top of the shelf.

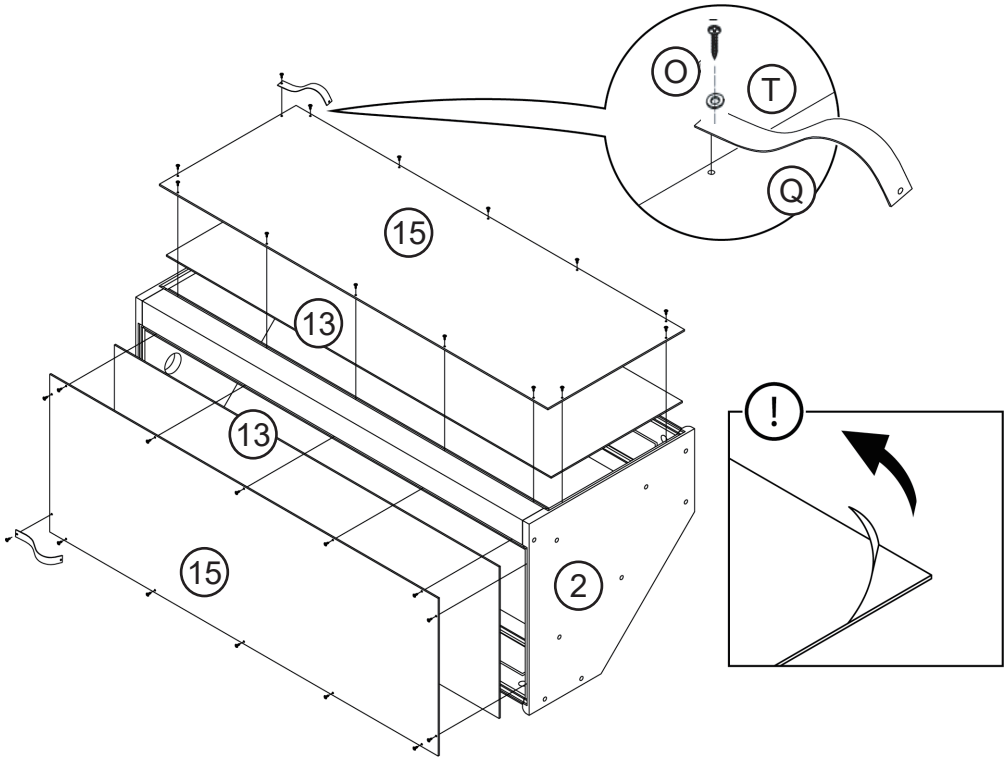

Remove protective film on the mirror panel.

8

Attach the door hinges to the upper shelf cabinet door (11).



(I) 4x

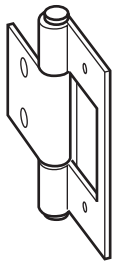

(N) 2x

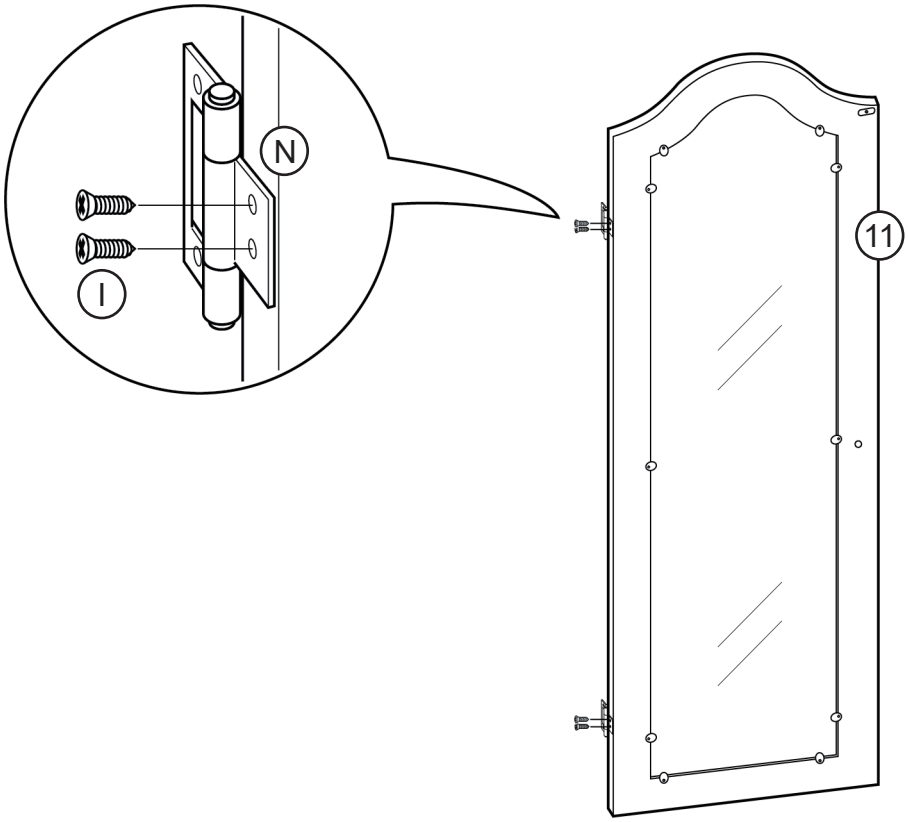

9

Assemble the upper shelf cabinet door (11) to the upper shelf assembly.



(I) 4x

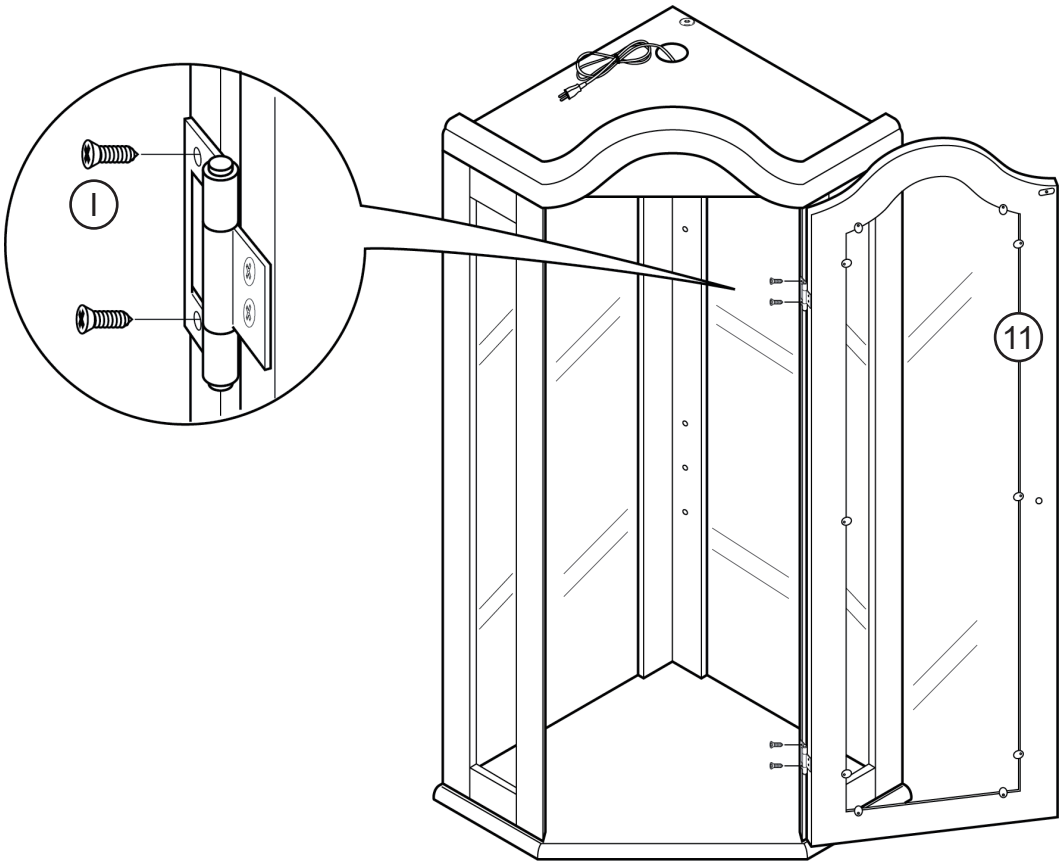

10

Attach the bottom shelf left and right panel (7,8) and the bottom shelf support bar (10) to the base (4).

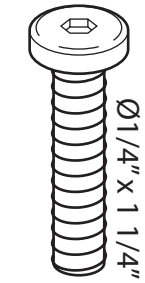

A 3x



B 5x



E 1x

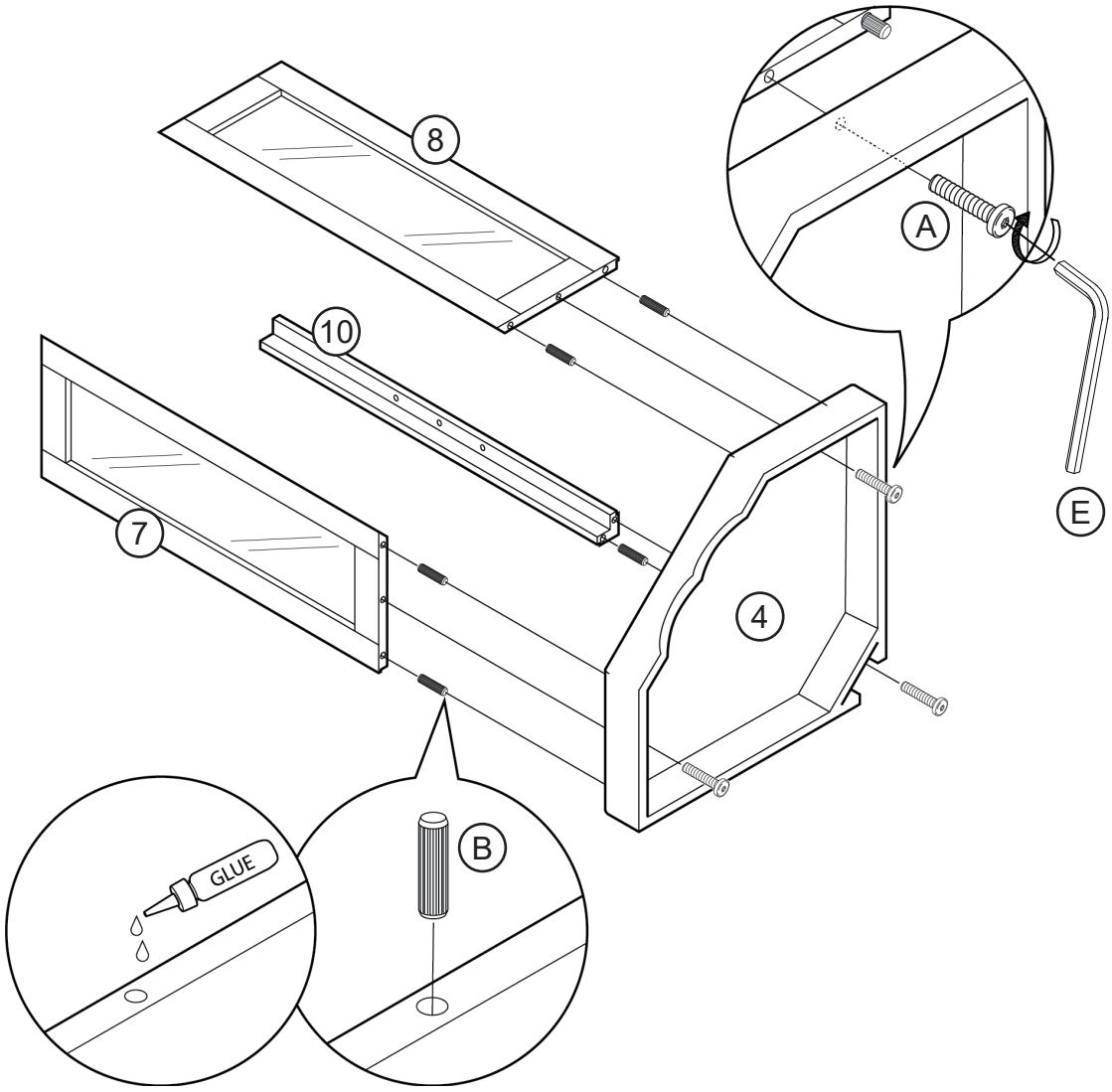

11

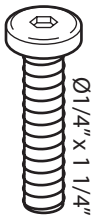

(A) 3x

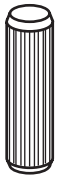

(B) 5x



(E) 1x

Attach the bottom shelf top panel (3) to the bottom shelf assembly.

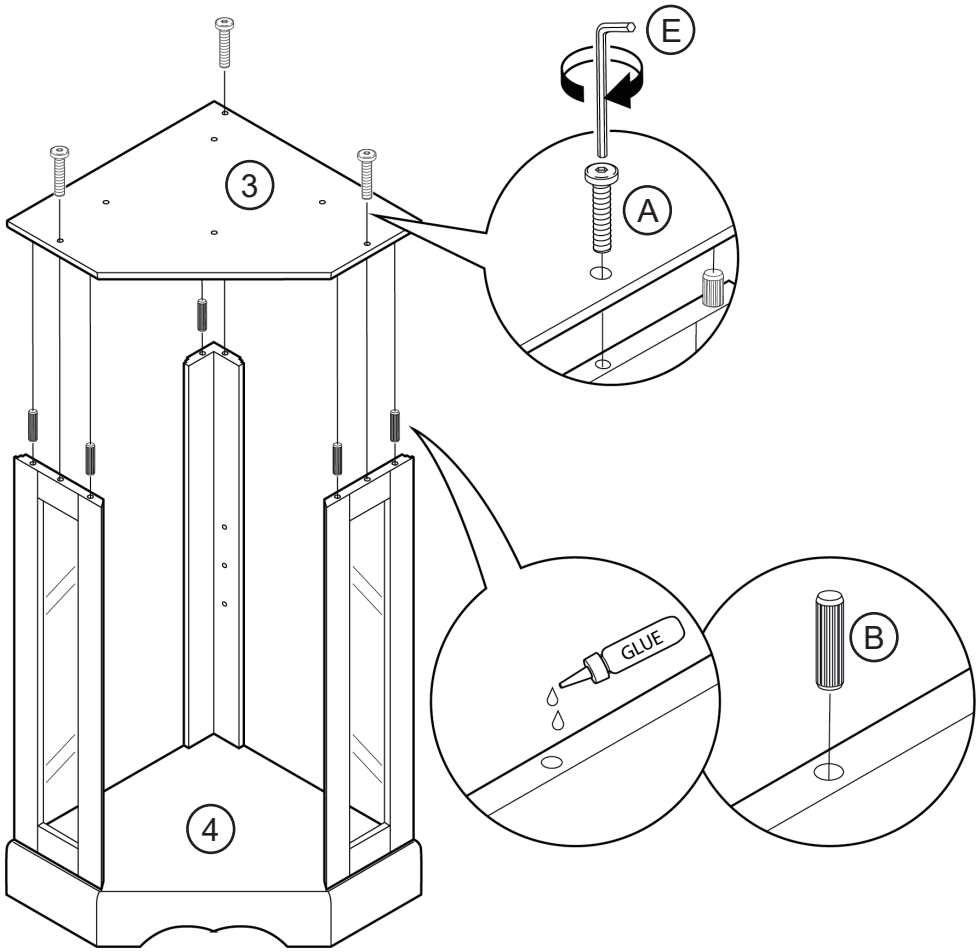

12



(O) 24x

Attach the mirror back panels (14) and the back panels (16) to the back of the bottom shelf assembly.

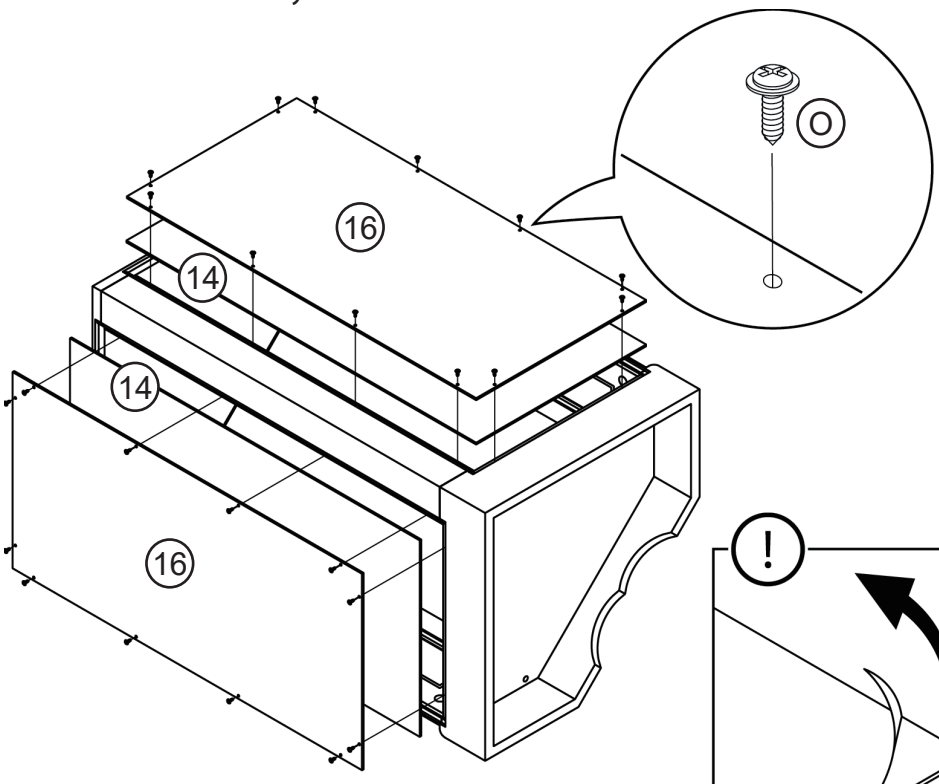

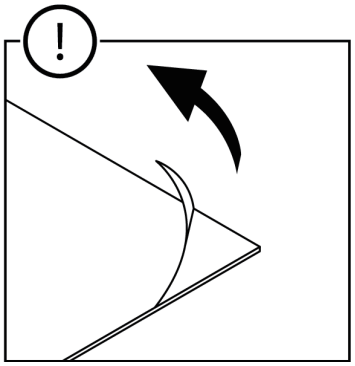

Remove protective film on the mirror panel.

13

Attach the door hinges to the bottom shelf cabinet door (12).



Ø3.5 x 14mm

(I) 4x

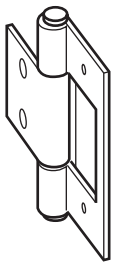

(N) 2x

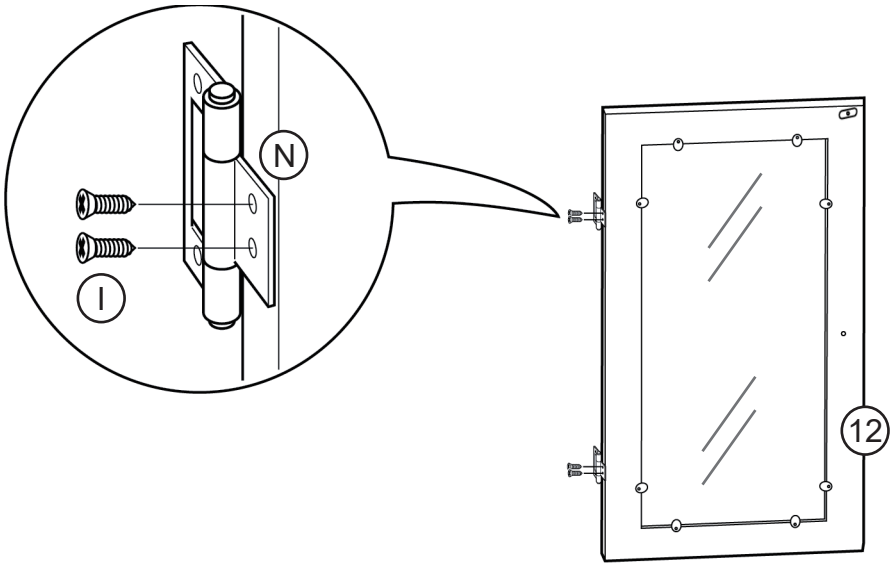

14

Assemble the bottom shelf cabinet door (12) to the bottom shelf assembly.



Ø3.5 x 14mm

(I) 4x

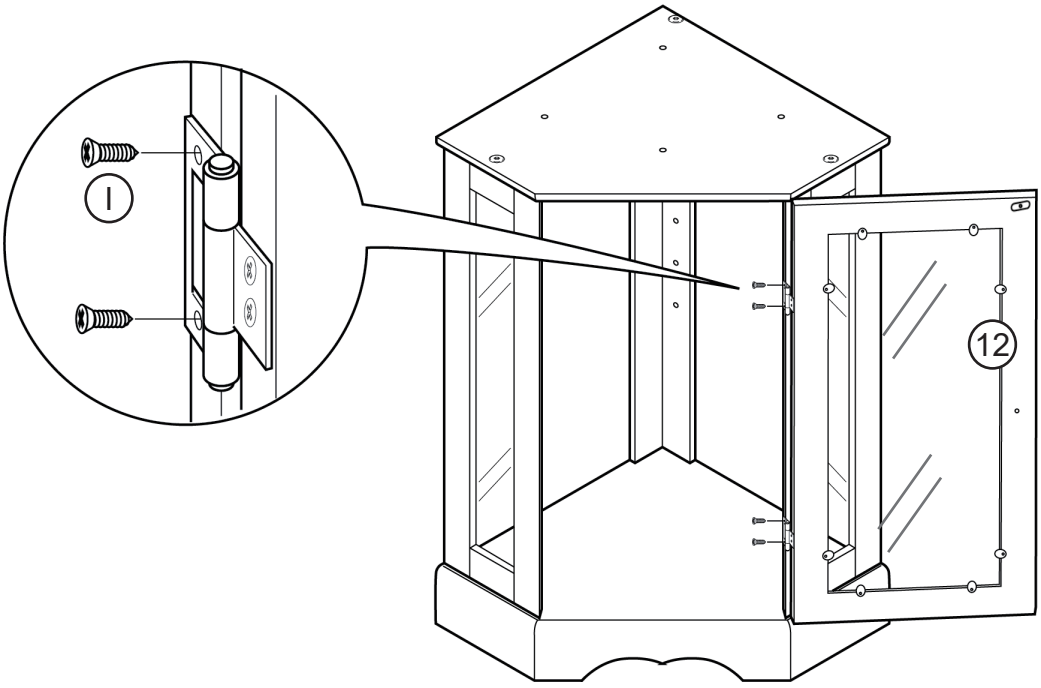

15

Assemble the upper shelf assembly on top of the bottom shelf assembly.



Ø8 x 20mm

C 2x

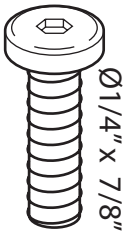

Ø1/4" x 7/8"

D 2x



E 1x

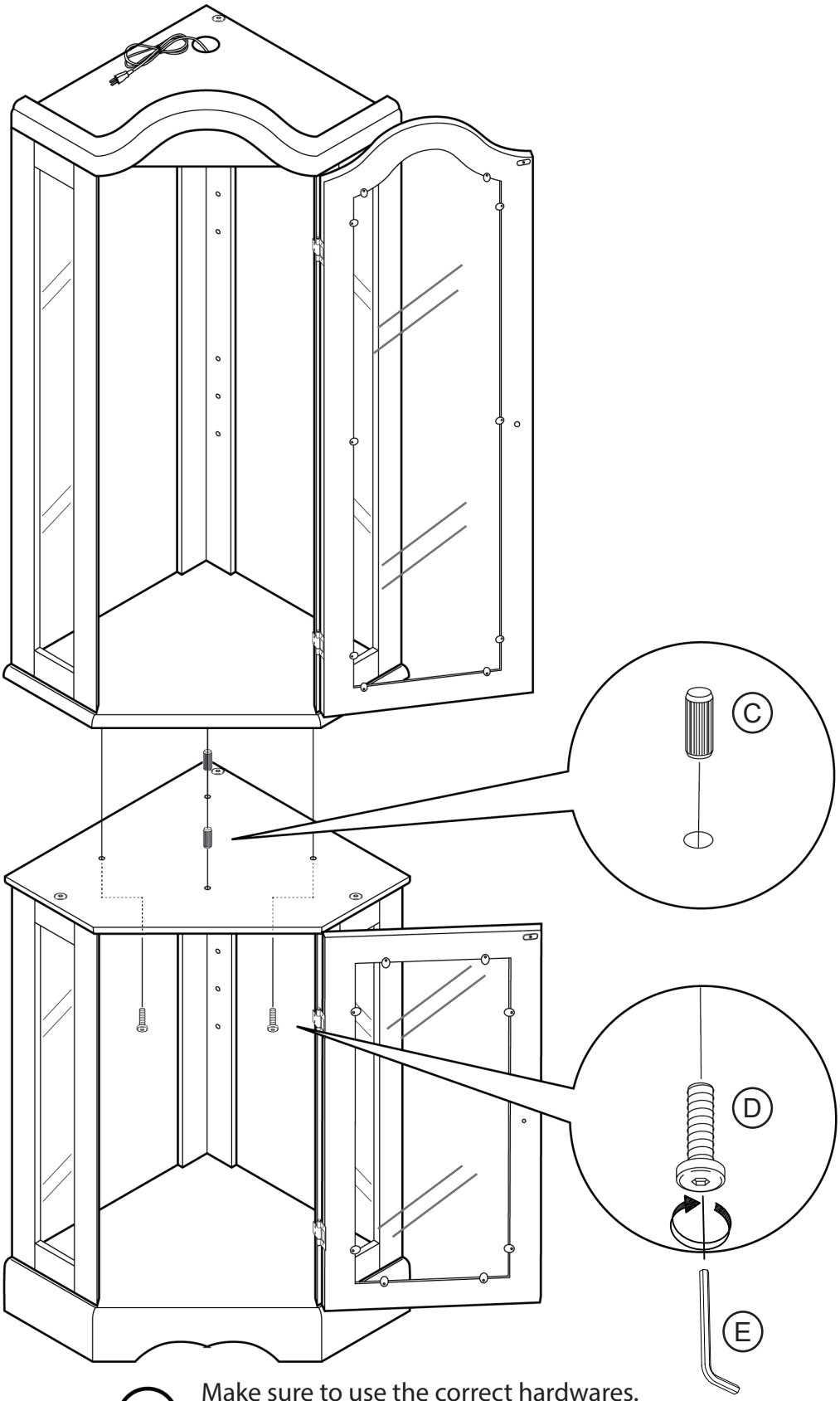

Make sure to use the correct hardwares.

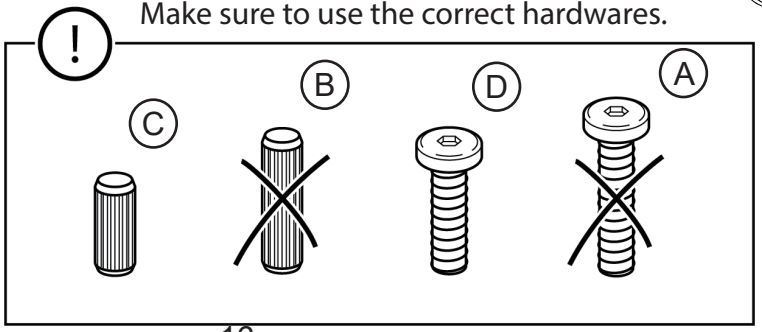

16

Insert shelf pegs into the cabinet.



(J) 15x

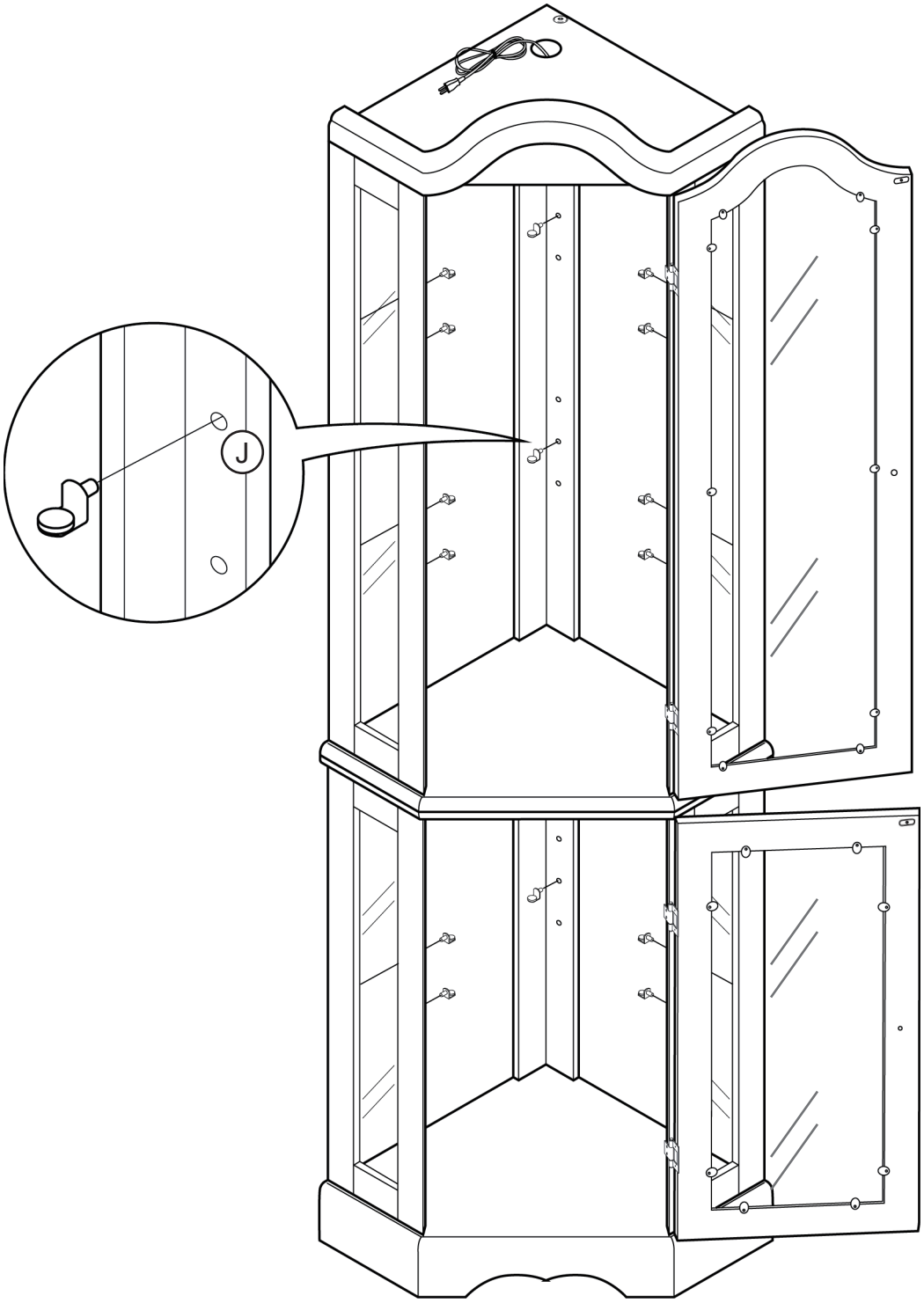

17

Put glass shelf panels (17) insdie the cabinet.

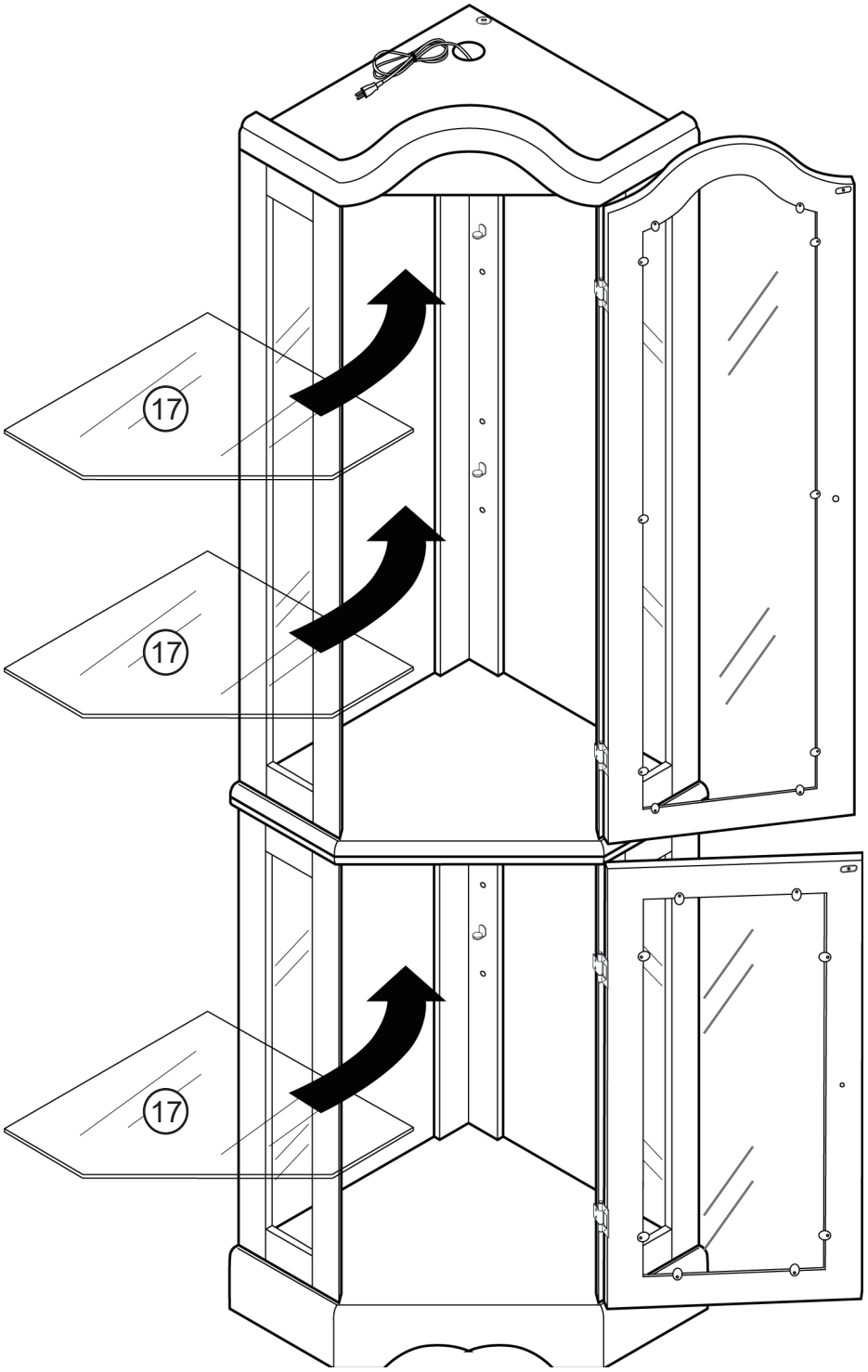

⚠ Caution when handling glass panels.

18

Affix the cabinet to the wall.

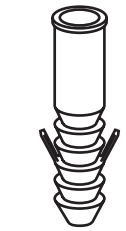

R 2x



S 2x



T 2x

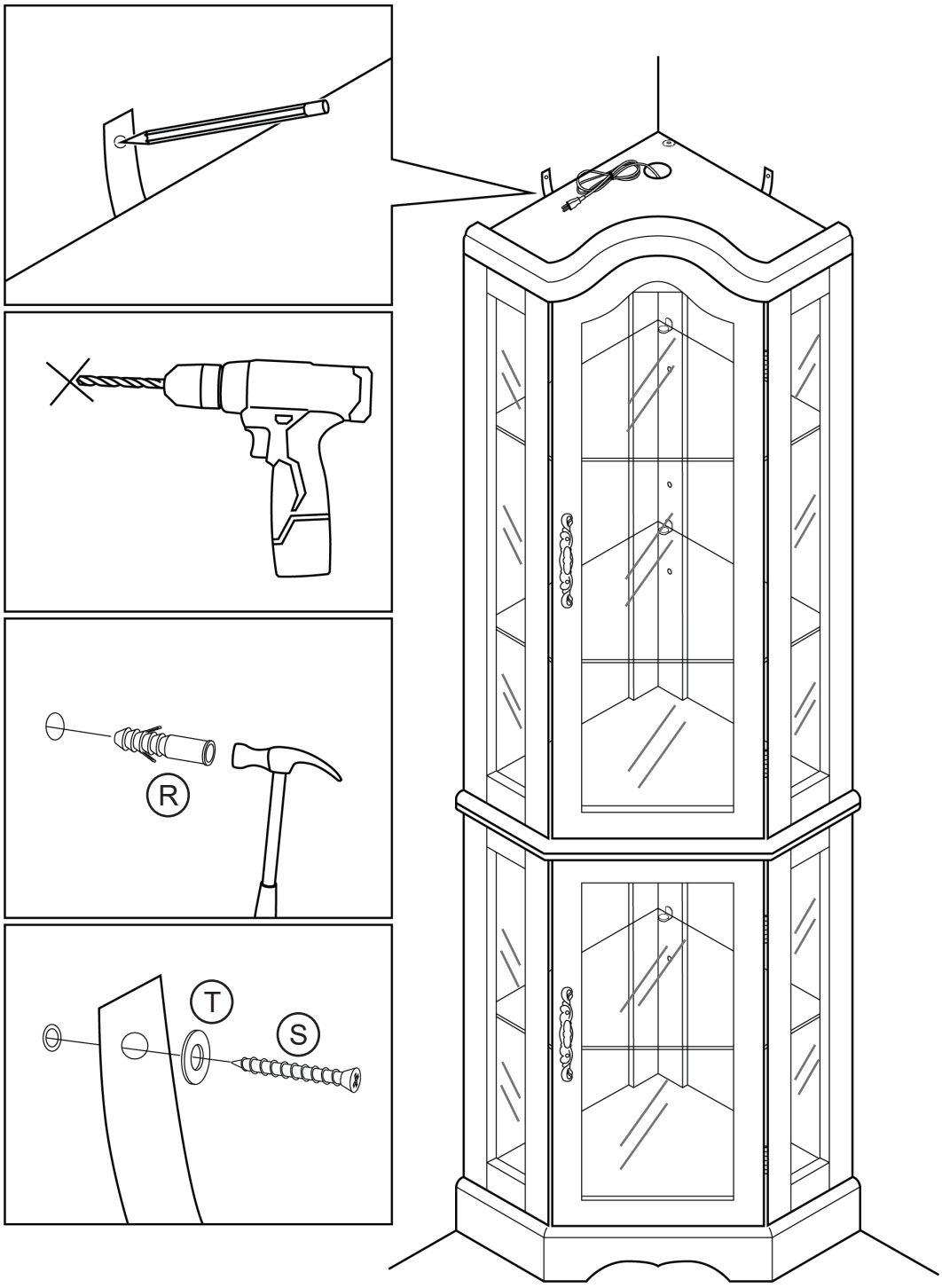

Furniture must permanently fixed to the wall stud with included anti-tipping device to prevent the furniture from tipping over.

- Mark the drill position on the wall with a pencil.
- Drill a small hole on the marked position.
- Insert a wall anchor into the drilled hole.
- Fixed the anti-tipping strap to the wall with provided screws.

YOU'RE FINISHED!

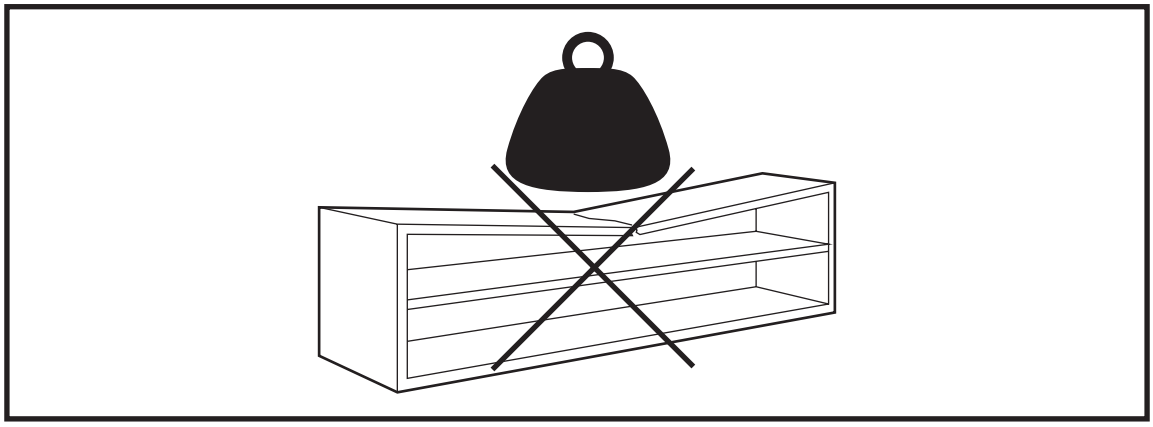

Warning

Only place items on top of the product if they meet the recommended size and weight limits.

Climbing on, stepping on, or placing overweighted objects on the product may cause property damage and/or injuries.

Items placed onto this product must be resting on a support surface without hanging over the edges.

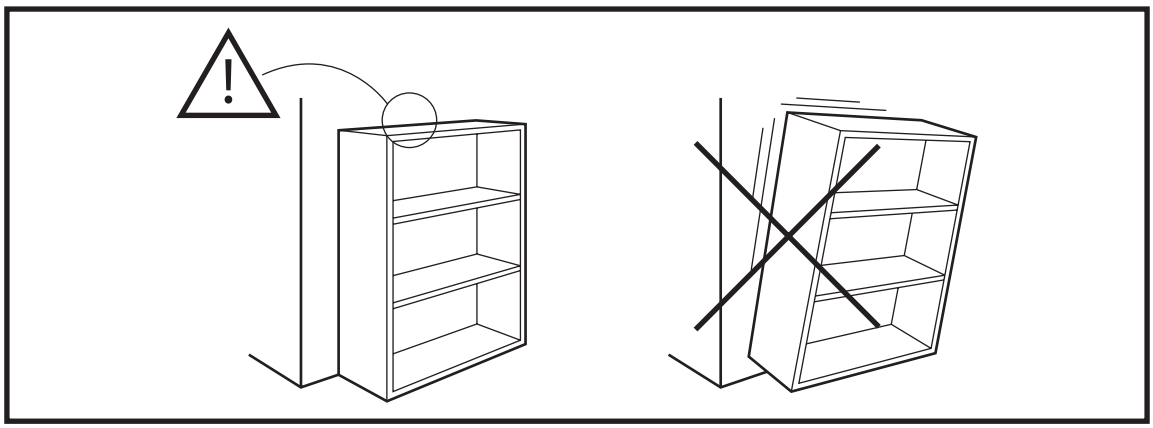

Warning

Serious or fatal crushing injuries may occur if the furniture tip-over.
Furniture must permanently affixed to the wall with included anti-tipping device in order to prevent the furniture from tipping over.

Different wall materials requires different types of wall anchors or screws. Use a suitable wall anchors or screws for your specific wall in order to secure the stability and load bearing capacity of the furniture. If you are uncertain about which type of device to use, please contact us or your local hardware store.