Assembly Instructions

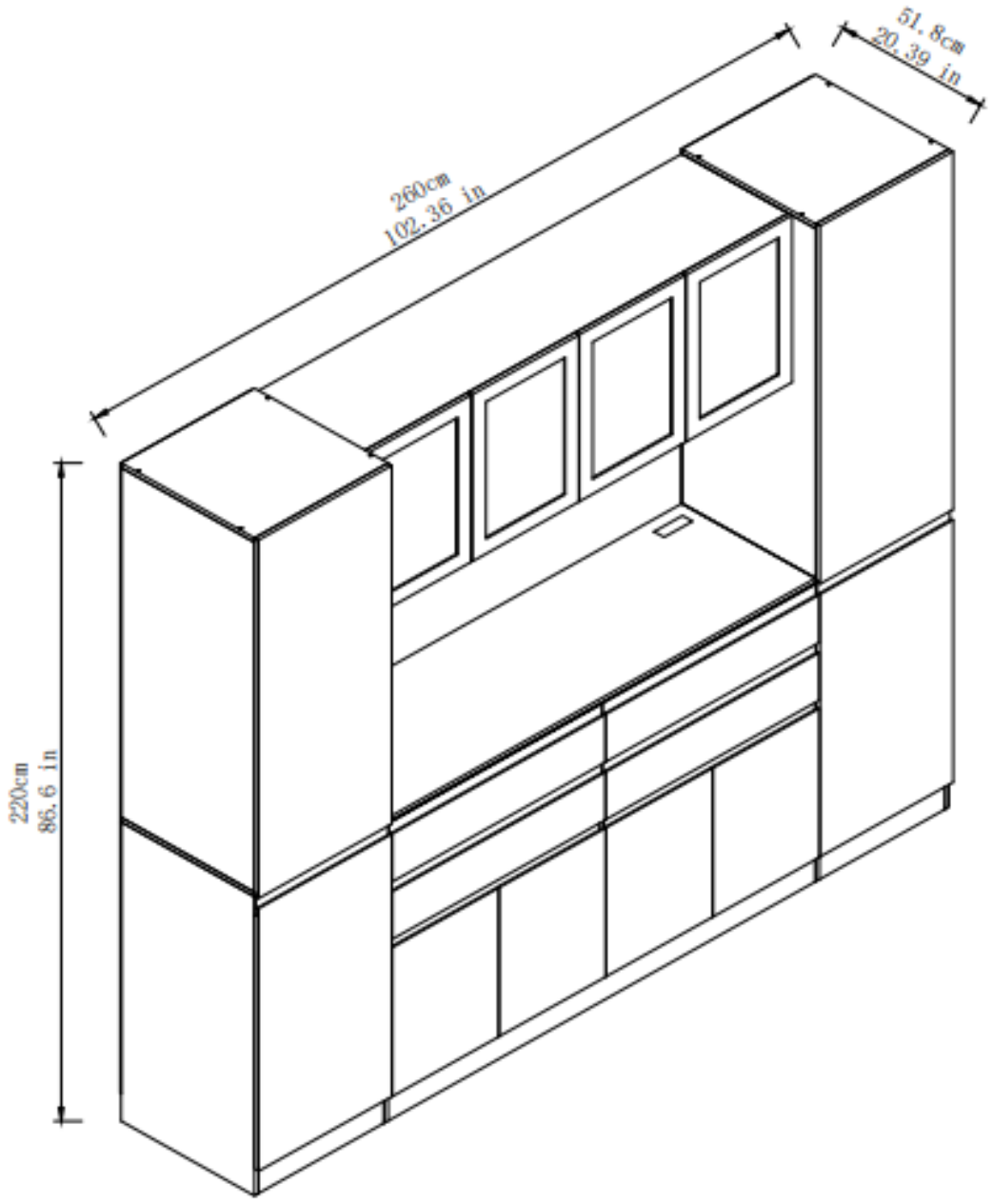

Please prepare the following tools

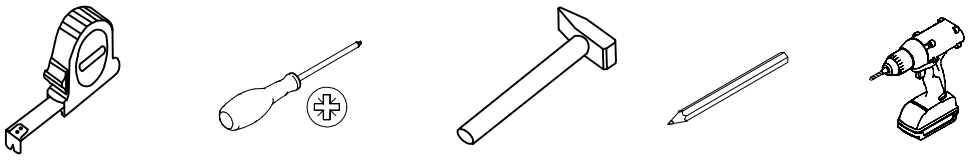

Installation Notes:

The furniture is large and heavy, please choose a good placement before installation. After all the installation is completed, try not to move widely, if necessary, please more than one person to cooperate to carry out.

Please note: After the overall installation is completed, such as vigorous dragging, or brute force to help carry, may cause irreversible damage to the object connection position or plate, the occurrence of cracks, affecting the use and appearance.

The assembly must be done by two people.

Lassemblage doit etre effectué par deux personnes.

Es wird empfohlen, dass zwei Personen den Artikel montieren.

El montaje debe ser efectuado por dos personas.

A montagem deve ser efetuada por duas pessoas.

Il montaggio deve essere eftettuato da due persone.

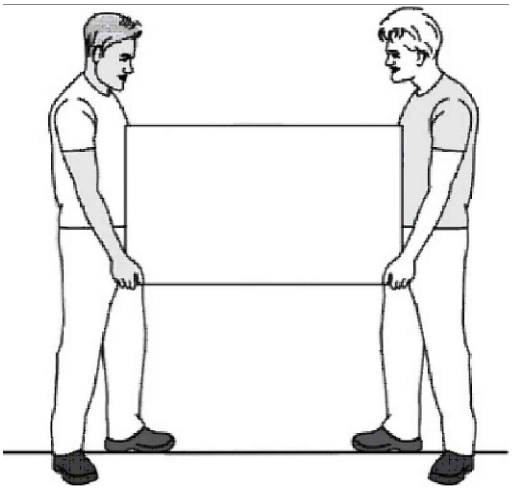



This product contain small parts, please
keep out of reach of children.

Ce produit conlient de petites pieces, sil vous plait,
à conserver hors de portee des enfants.

Bitte halten Sie Kleine Teile außerhalb der Reichweite von Kinde n.

Este producto contiene piezas pequenas,
nantener fuera del alcance de los ninos.

Este produto contém peças pequenas, por favor,
nantenha fora do alcance das criancas

Questo prodotto contiene piccole parti,
si prega di tenerde fuori dalla protata dei bambini.

REAL SIZE- TAILLE RÉELLE - ORIGINALGRÖßE - TAMAÑO VERDADERO - TAMANHO REAL- DIMENSIONE REALE

In case of doubt, compare the hardware with the full-size images below.

En cas de doute, veuillez comparer le matériel avec les images en taille réelle ci-dessous.

Vergleichen Sie im Zweifelsfall die Schrauben mit den Abbildungen in Originalgröße.

En caso de dudas, compare las herrajes con las imágenes a seguir en tamaño real.

Em caso de dúvida, compare as ferragens com as imagens abaixo em tamanho real.

In caso di dubbio, confronta le ferramenta con le immagini sottostanti a grandezza reale.

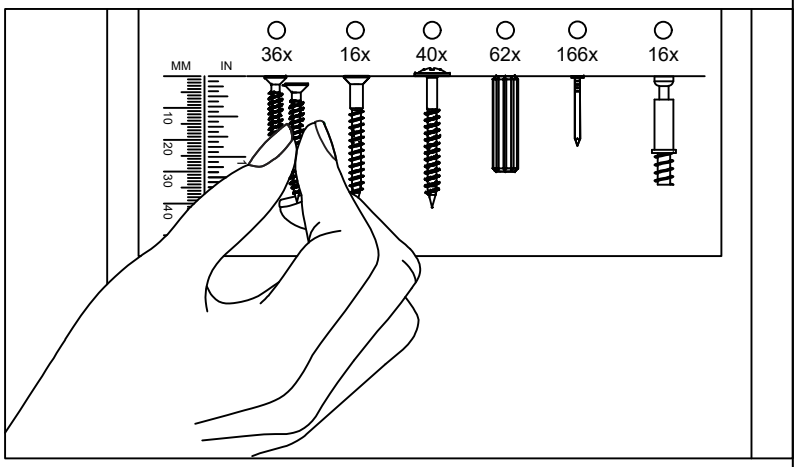

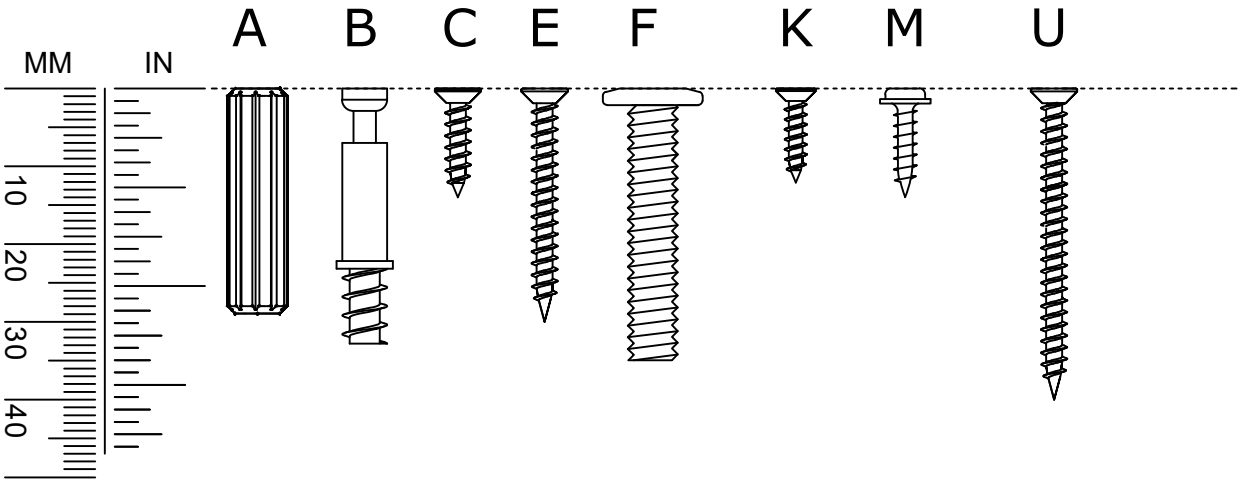

A x 30



Ø8 x 30mm

B x 108



Ø6 x 34mm

C x 248



M3.5 x 14mm

D x 108



Ø15 x 9.5mm

E x 32



Ø4 x 30mm

F x 12



M6 x 35mm

G x 1

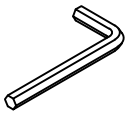

M4

H x 24

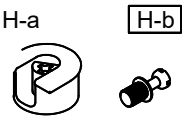

∅20mm

J x 4



18"

K x 32

M3.5 X 12mm

L x 12



15*10mm

M x 12

M3*16mm

N x 1



P x 8

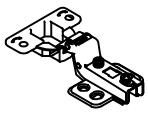

Ø35mm

Q x 8

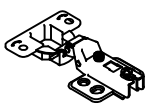

Ø35mm

R x 10

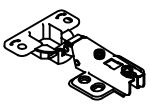

Ø35mm

S x 2



T x 1

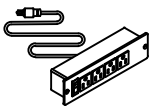

4AC

U x 56



∅4 x 40mm

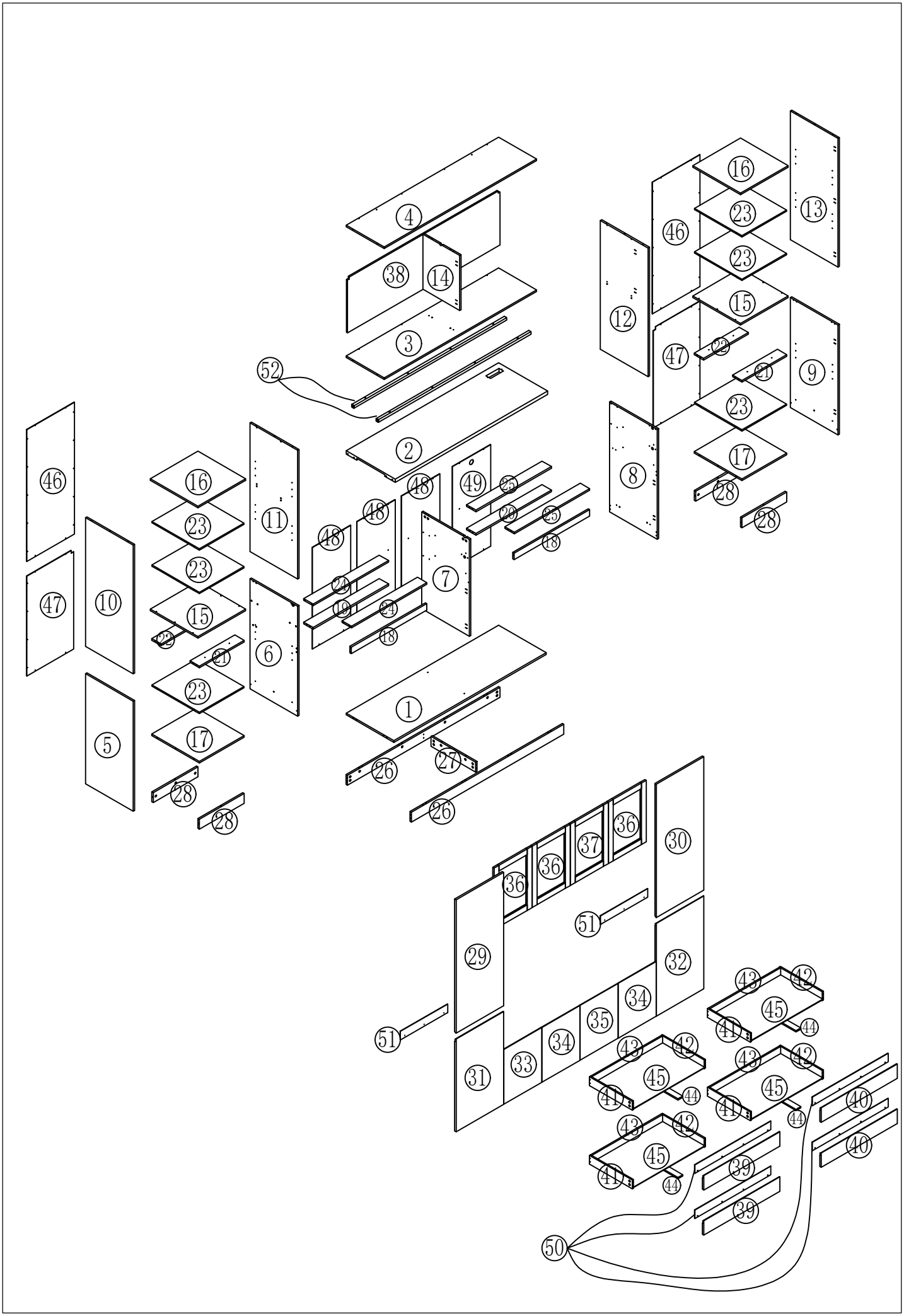
4
38
14
3
52
2
46
16
23
13
12
15
47
22
21
9
8
17
28
48
49
25
20
18
11
10
7
24
19
6
1
5
26
27
30
36
37
29
51
32
34
35
33
31
43
42
45
41
44
40
39
50

ATTENTION - AVERTISSEMENT - ACHTUNG - ATENCIÓN - ATENÇÃO - ATTENZIONE

Assemble the furniture on a clean and flat surface and cover it with the cardboard of the packaging.

Assemblez le meuble sur une surface propre et plane et couvrez-le avec le carton de l'emballage du produit.

Um Beschädigungen zu vermeiden, montieren Sie den Artikel auf einer weichen, sauberen Unterlage. Tipp: Legen Sie den Artikel auf dem Verpackungskarton.

Montar el mueble sobre una superficie limpia y plana y cubrirlo con el cartón del embalaje del producto.

Montar o móvel sobre uma superfície limpa e plana e forrá-la com o papelão da embalagem do produto.

Montare il mobile su una superficie pulita e piana e rivestirla con il cartone d'imballaggio del prodotto.

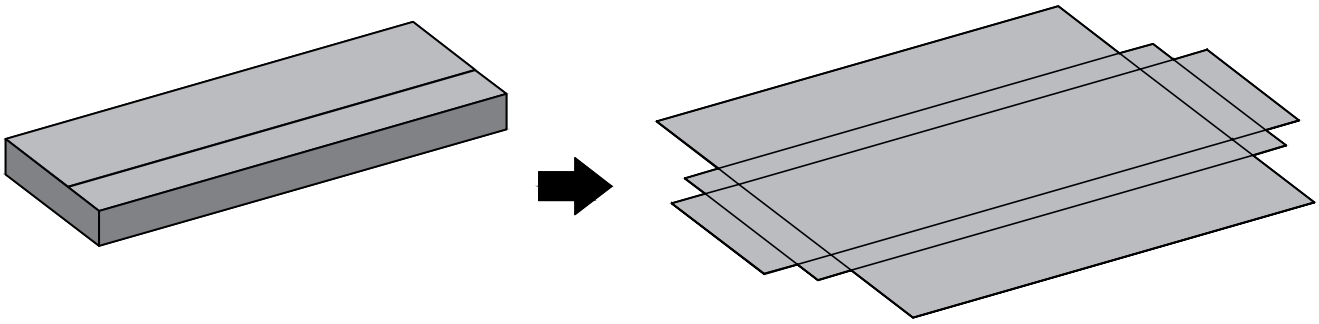

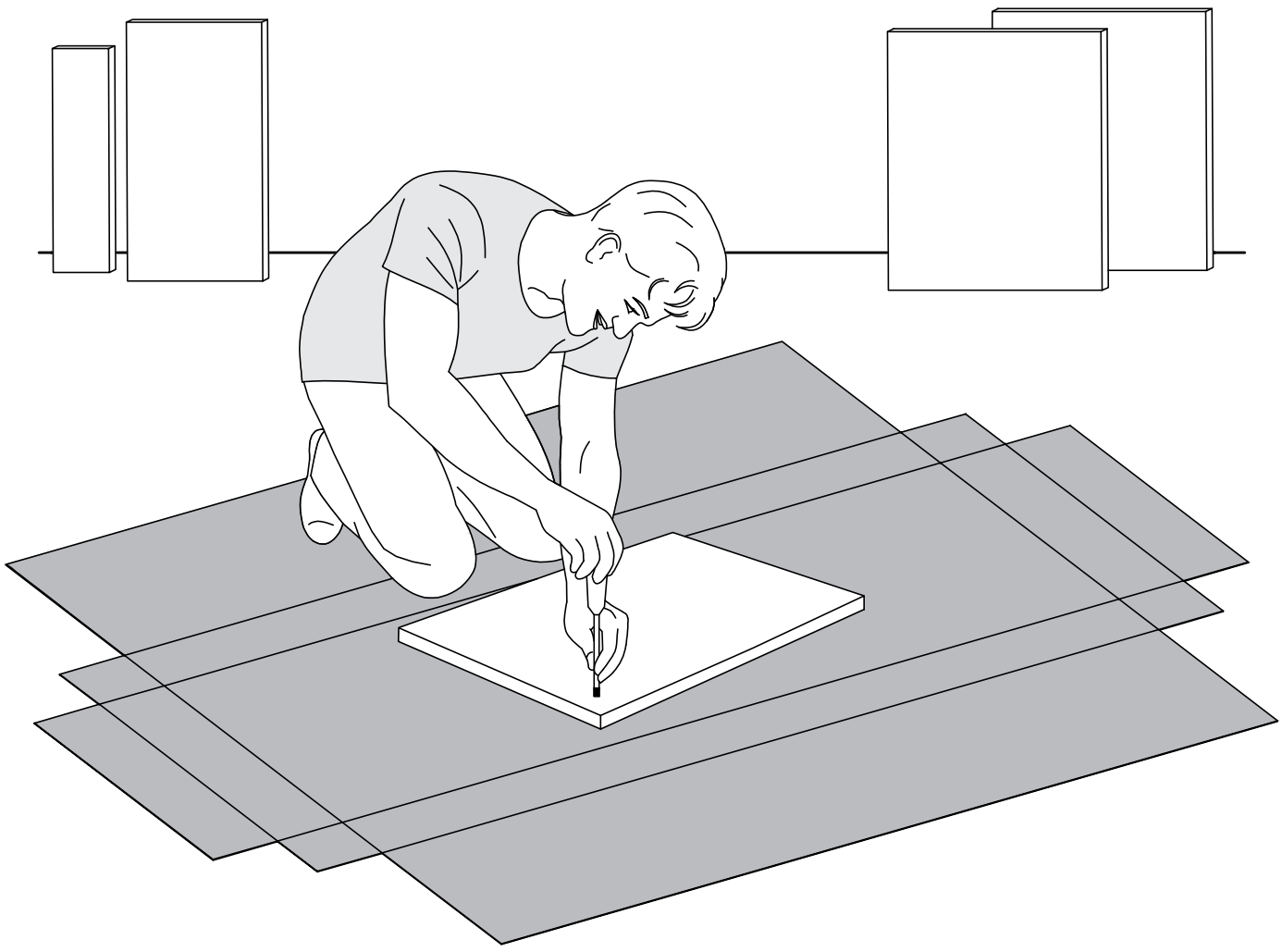

Use parts B and D

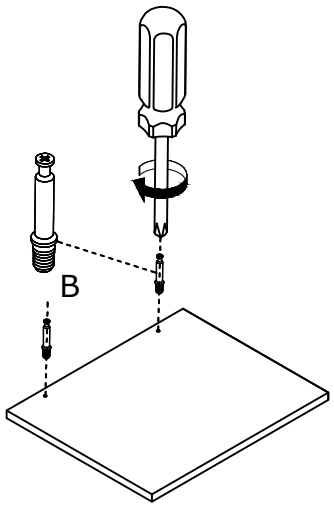

Step1

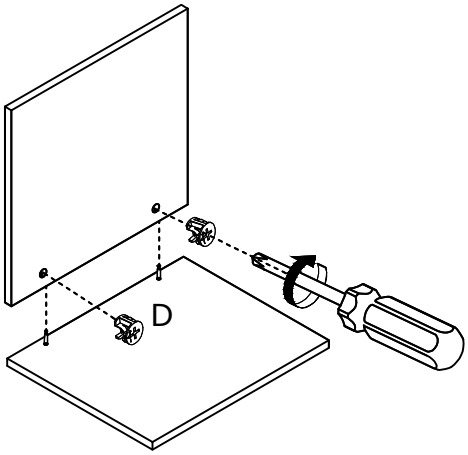

Step2

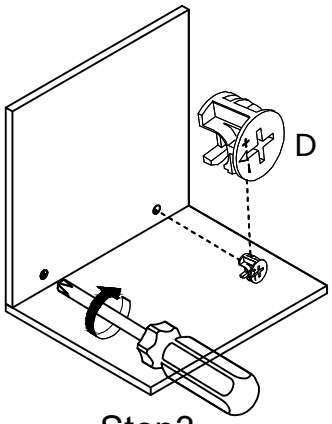

Step3

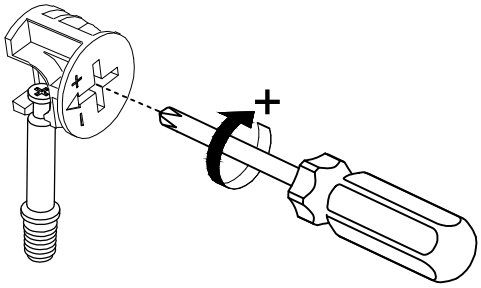

Use a screwdriver to lock in the direction of the "+" sign

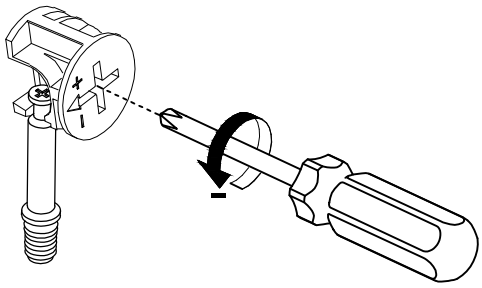

Disassemble along the direction of "-" sign

1

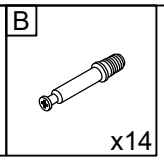

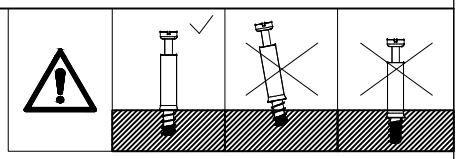

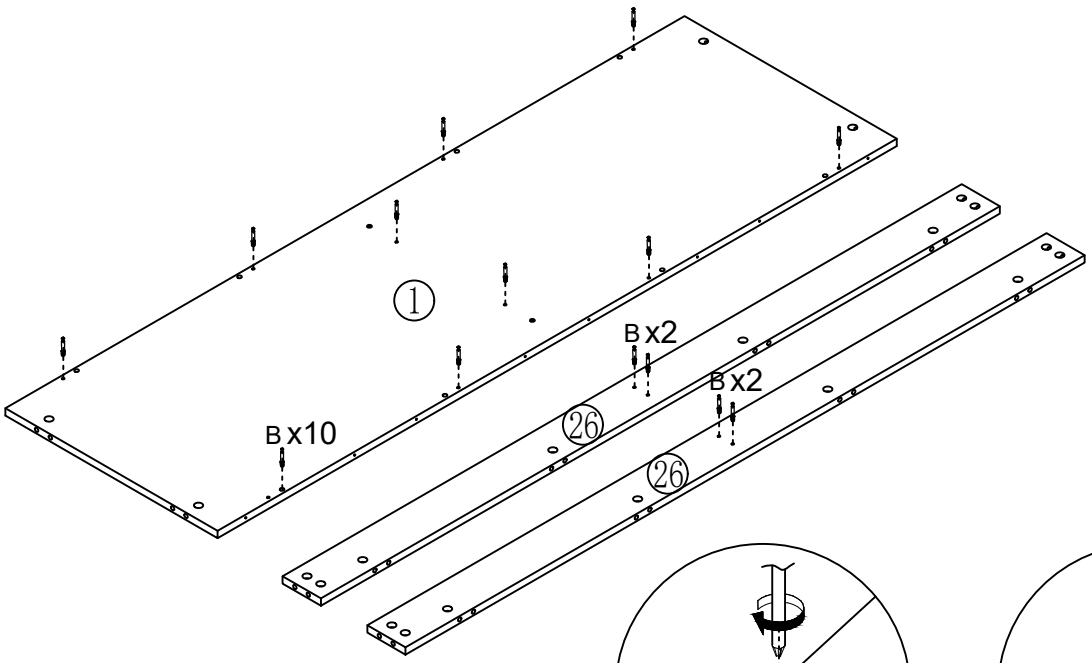

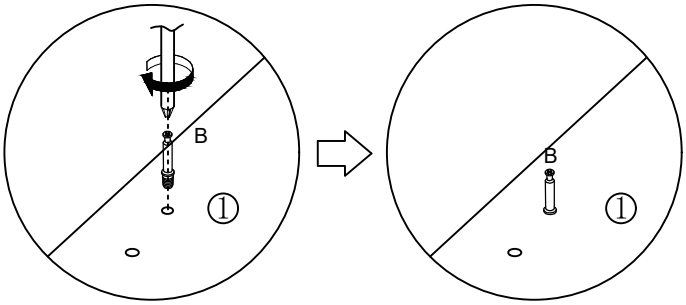

2

D x4

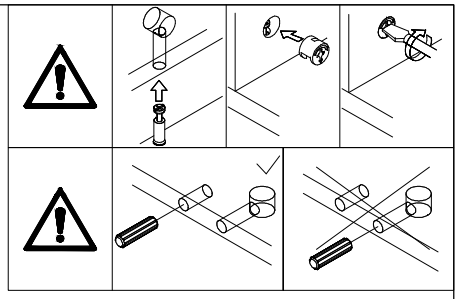

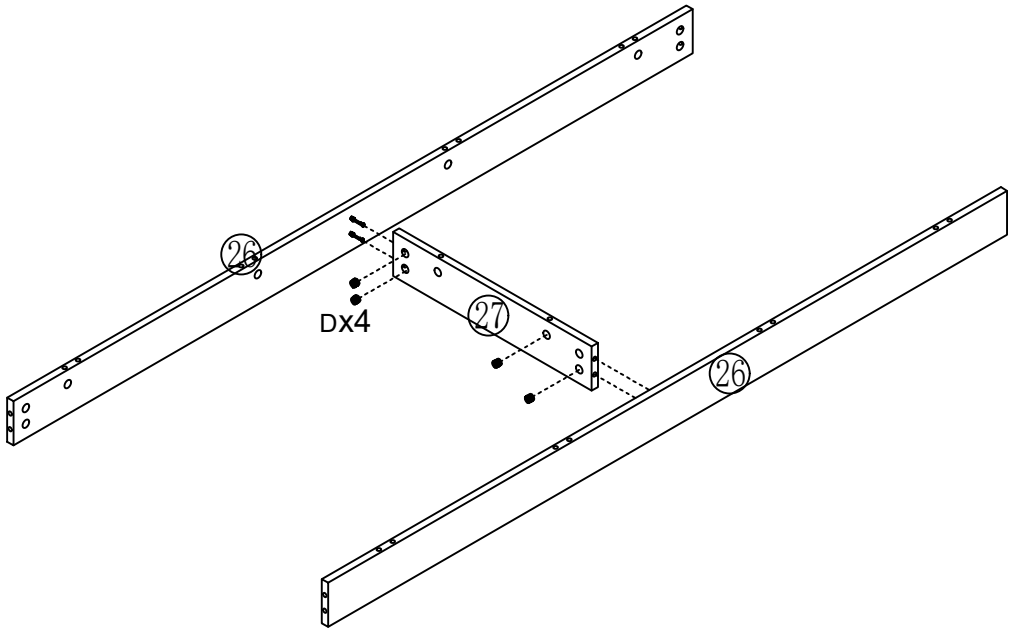

3

B x14

J J-CL x2

J J-CR x2

K x8

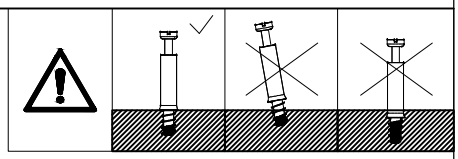





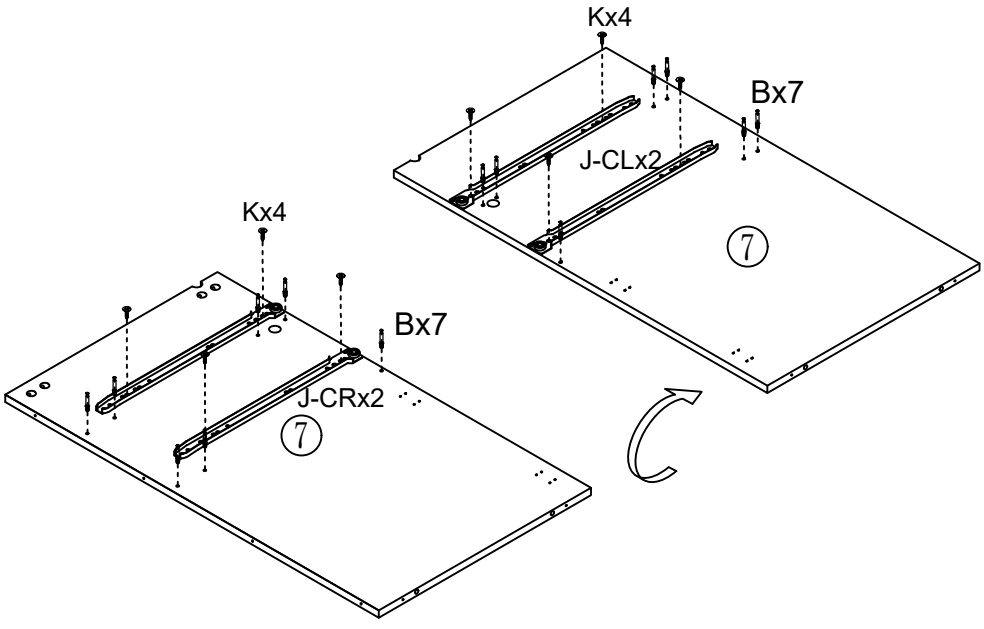

4

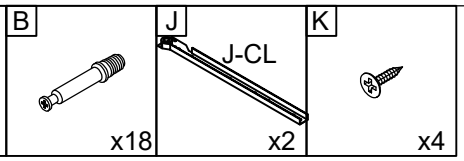
B
x18
J
J-CL
x2
K
x4

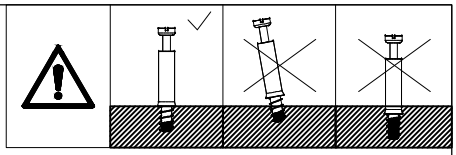


K
K
J-CL

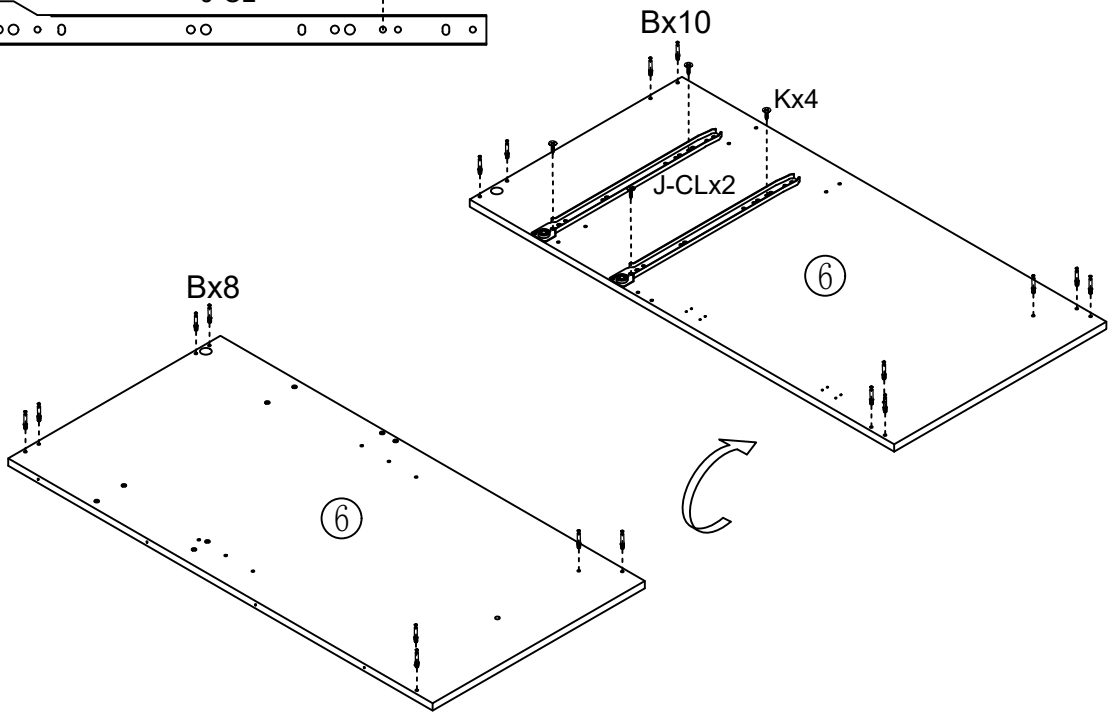
Bx10
Kx4
J-CLx2
⑥
Bx8
⑥

5

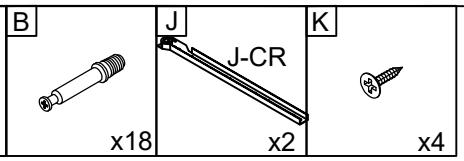
B
x18
J
J-CR
x2
K
x4

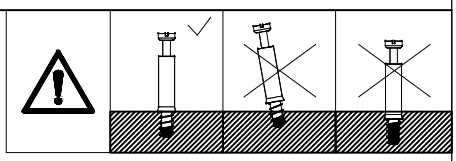


K
K
J-CR

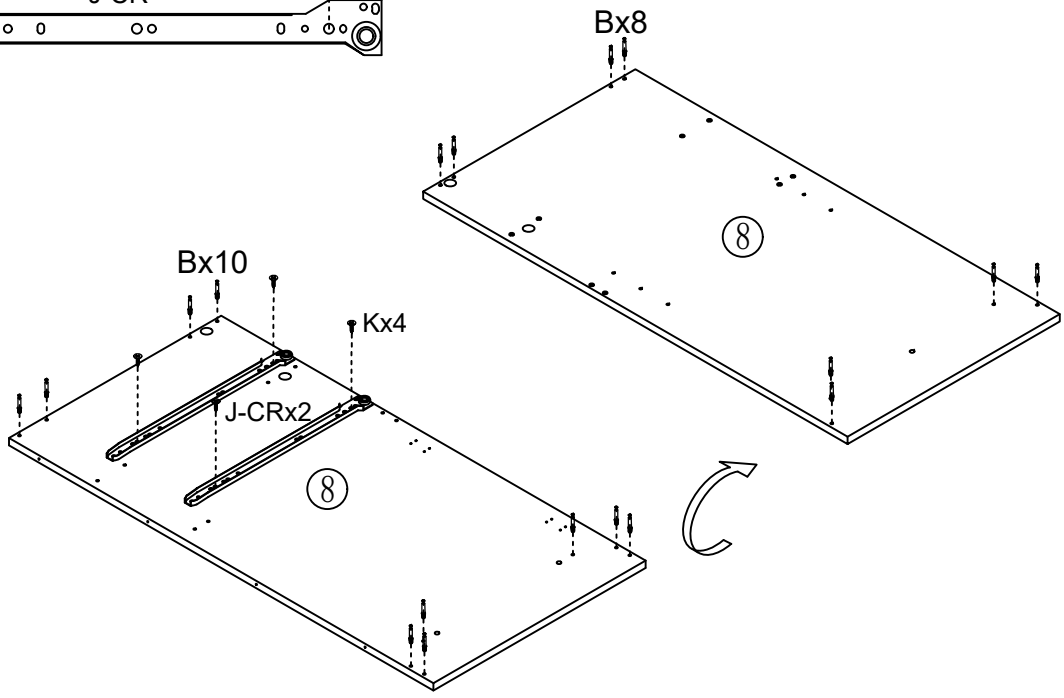
Bx8
⑧
Bx10
Kx4
J-CRx2
⑧

6

B



x4

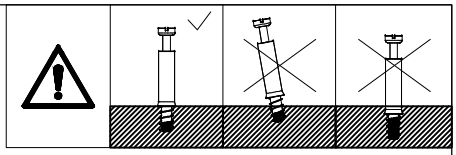

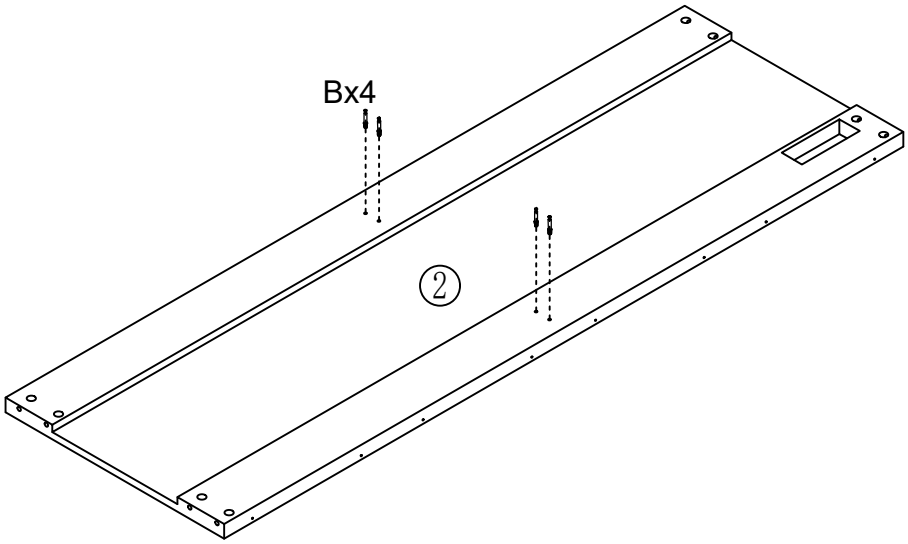

7

A

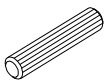

x2

U



x2

This is the backplane mounting guide hole. Make sure to keep it facing the same direction during installation. Subsequent installations should follow the same orientation.

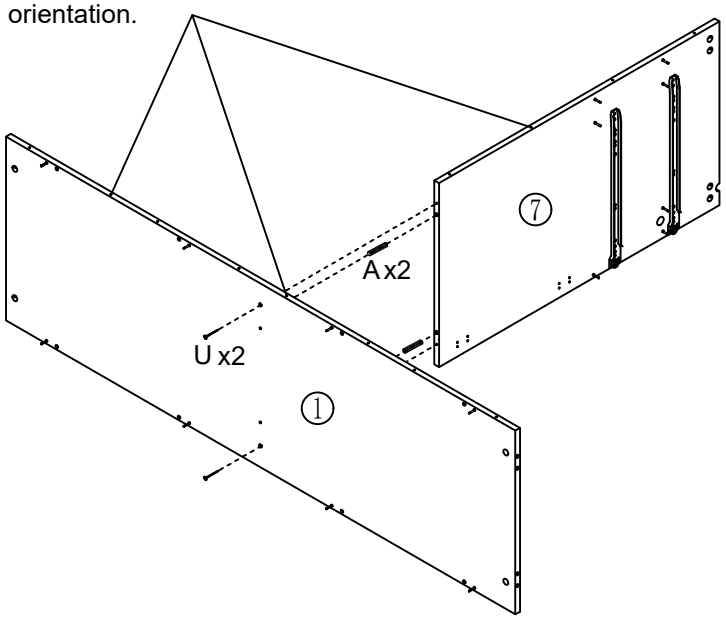

8

A x8

D x10

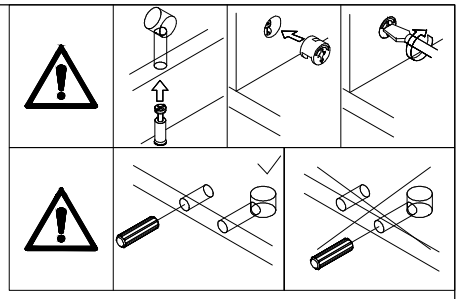

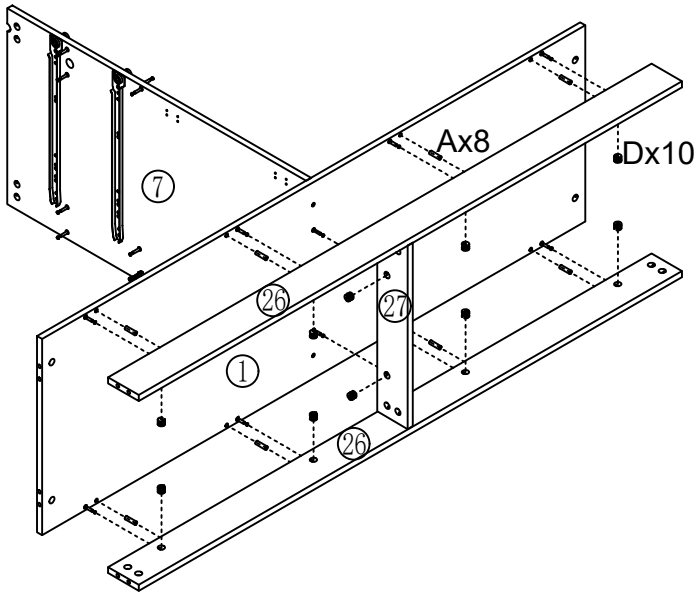

9

D x11

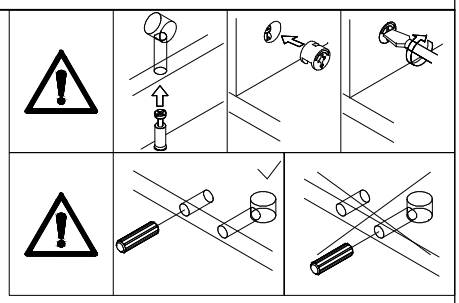

This is the backplane mounting guide hole. Make sure to keep it facing the same direction during installation. Subsequent installations should follow the same orientation.

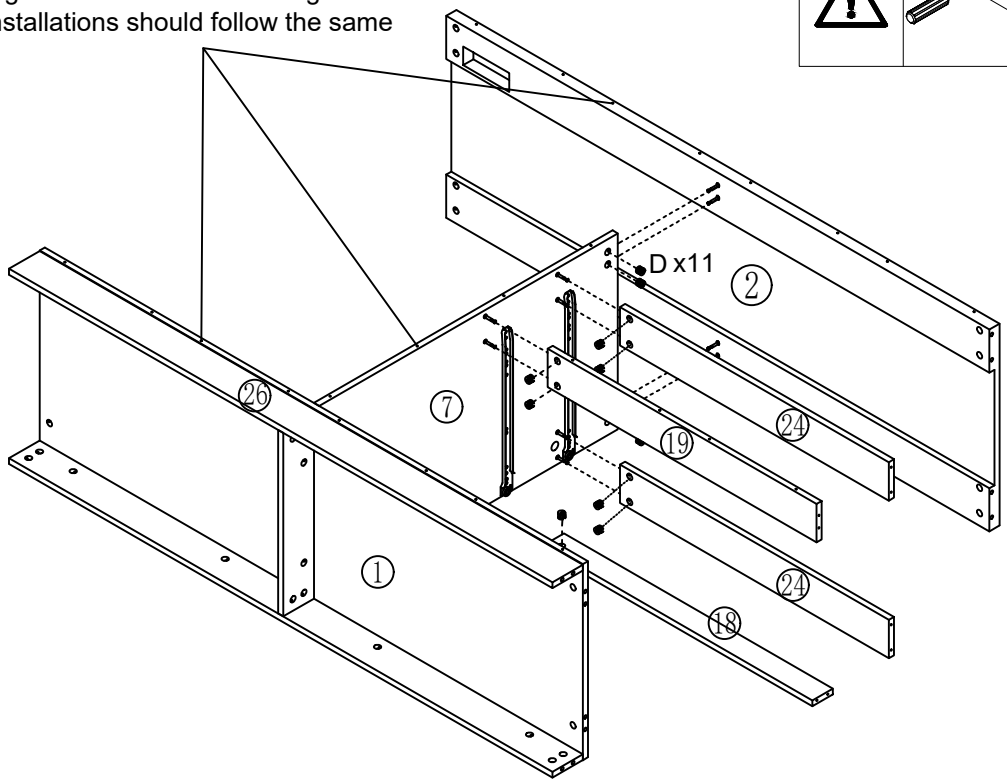

10

A x2

D x10

U x8

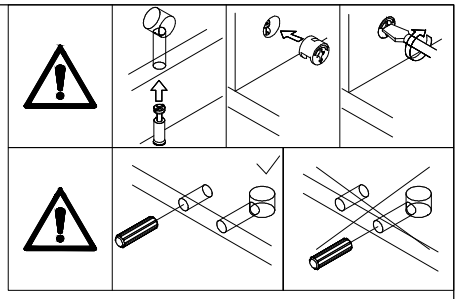

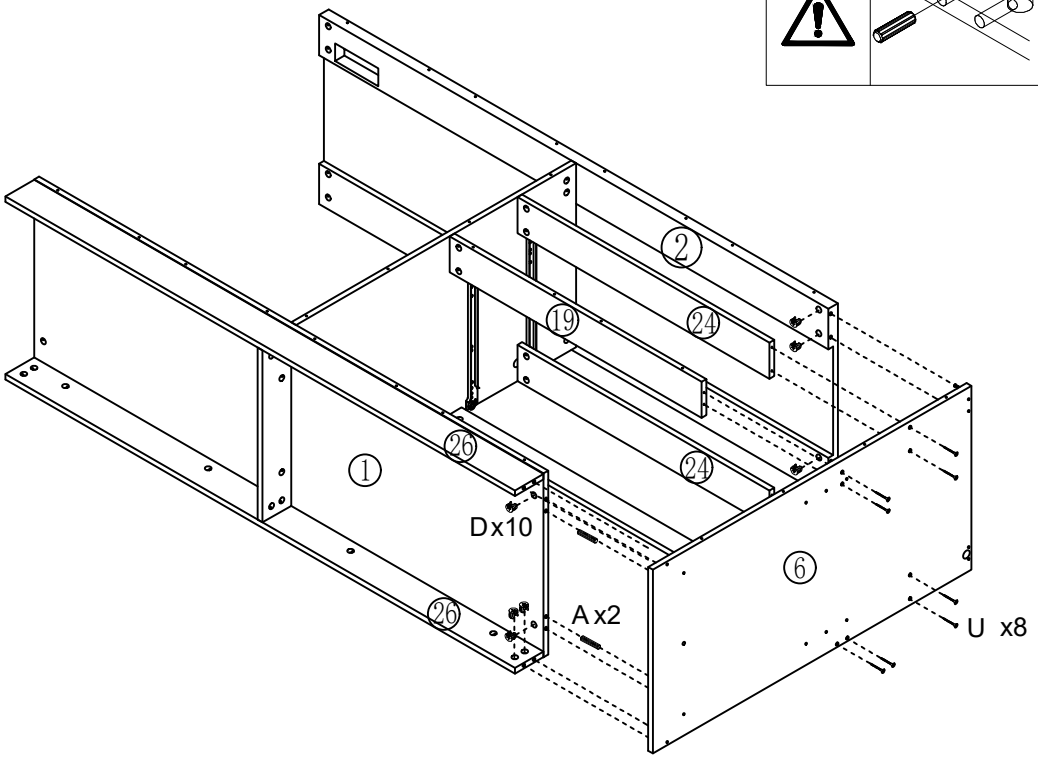

11

D x7

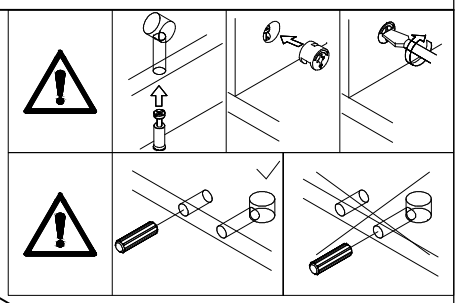

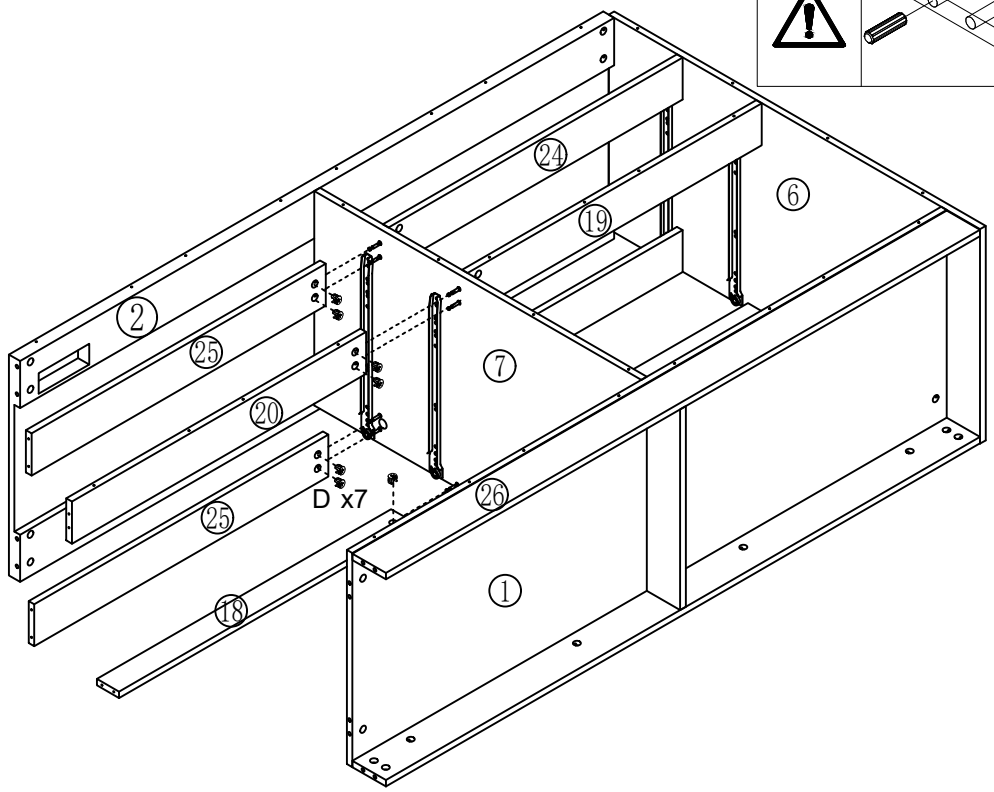

12

A x2 D x10 U x8

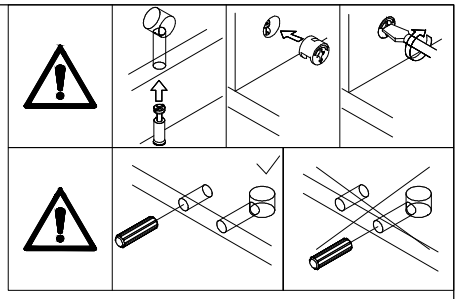

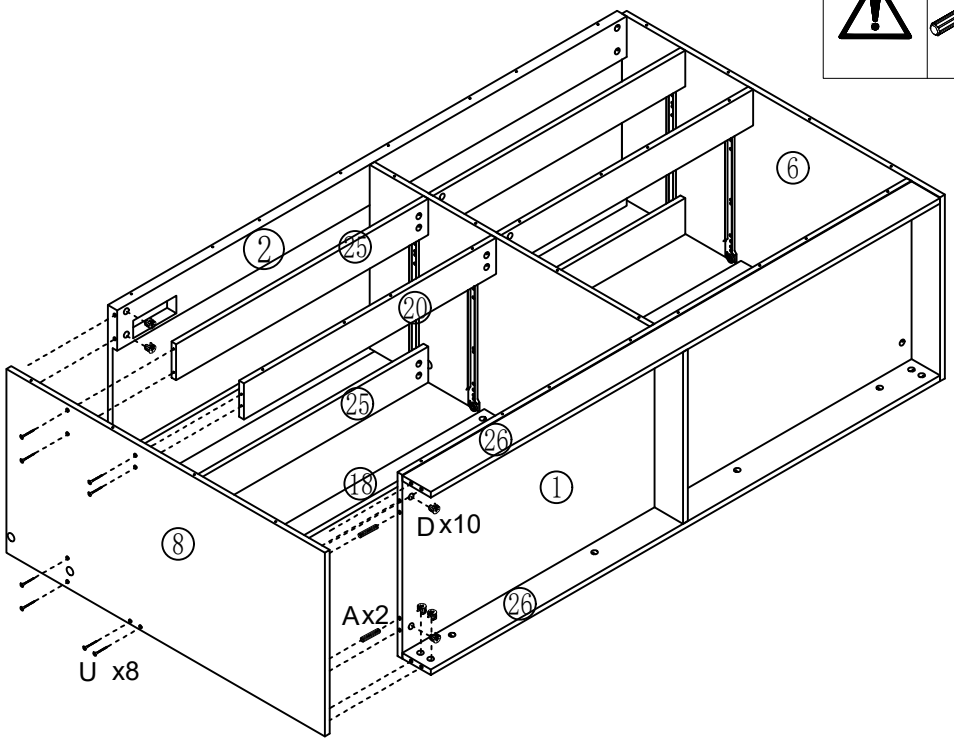

13

B x20

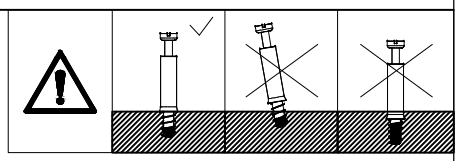

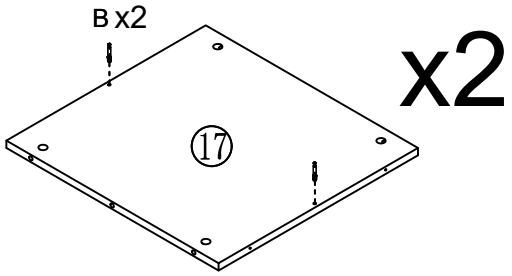

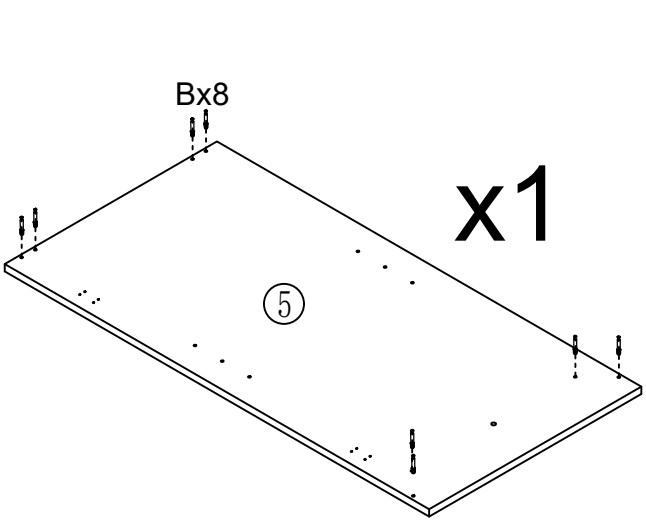

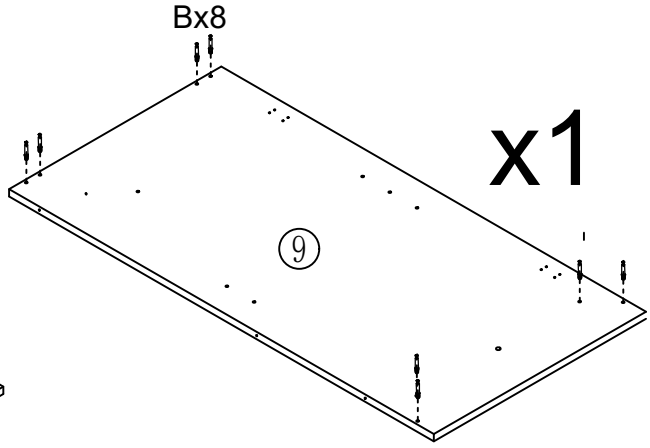

14

D

x4

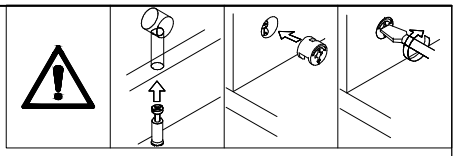

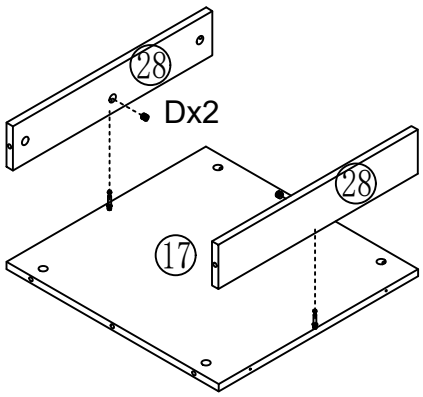

x2

15

A

x2

D

x16

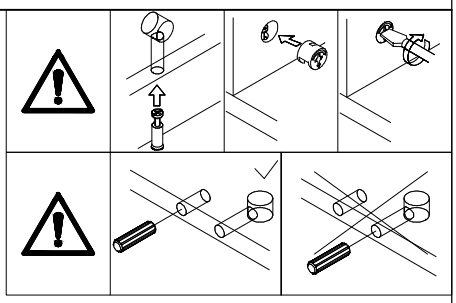

This is the backplane mounting guide hole. Make sure to keep it facing the same direction during installation. Subsequent installations should follow the same orientation.

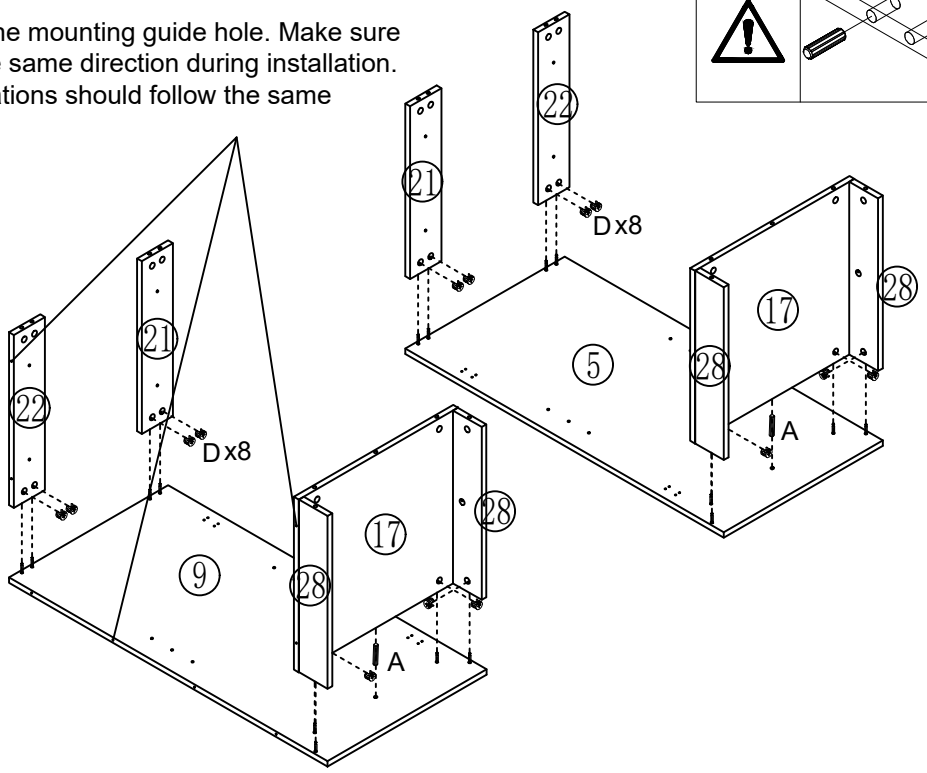

16

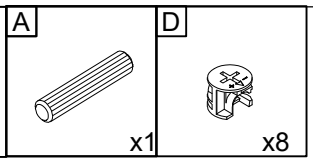

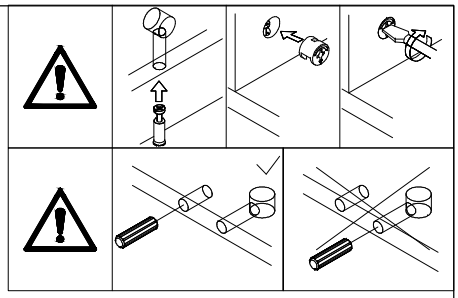

This is the backplane mounting guide hole. Make sure to keep it facing the same direction during installation. Subsequent installations should follow the same orientation.

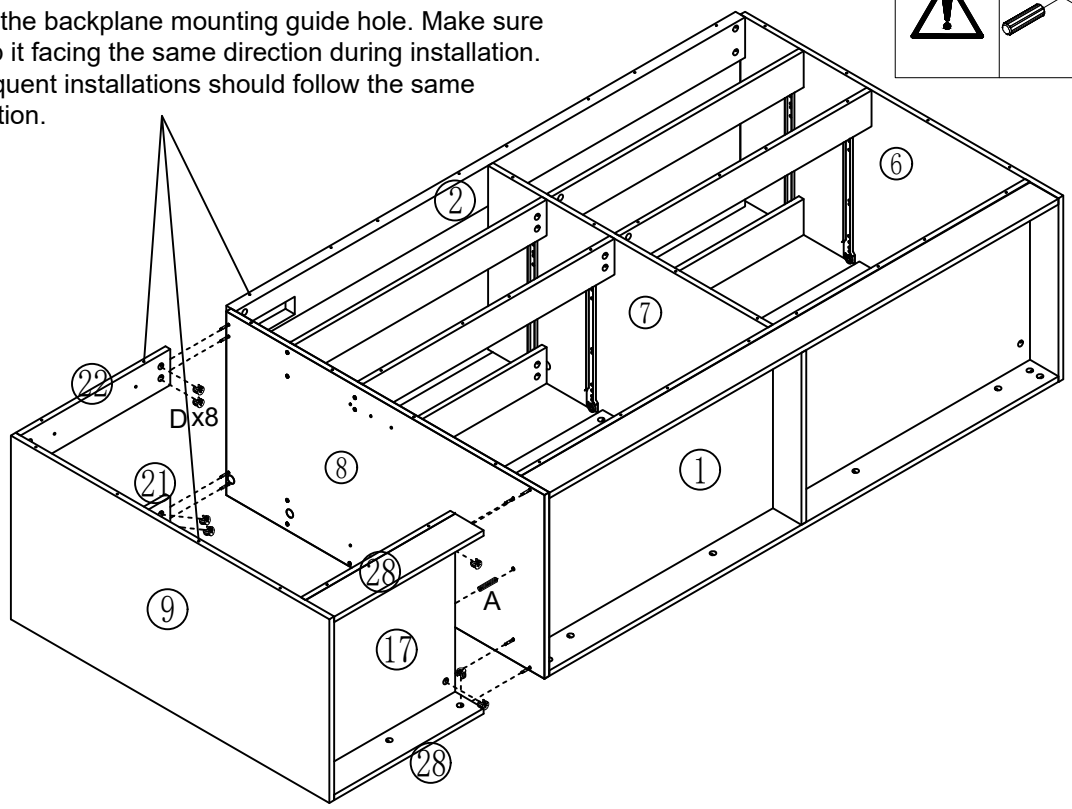

17

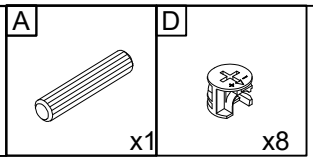

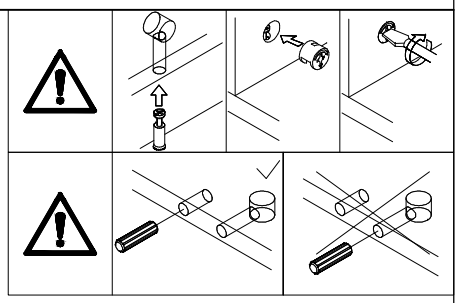

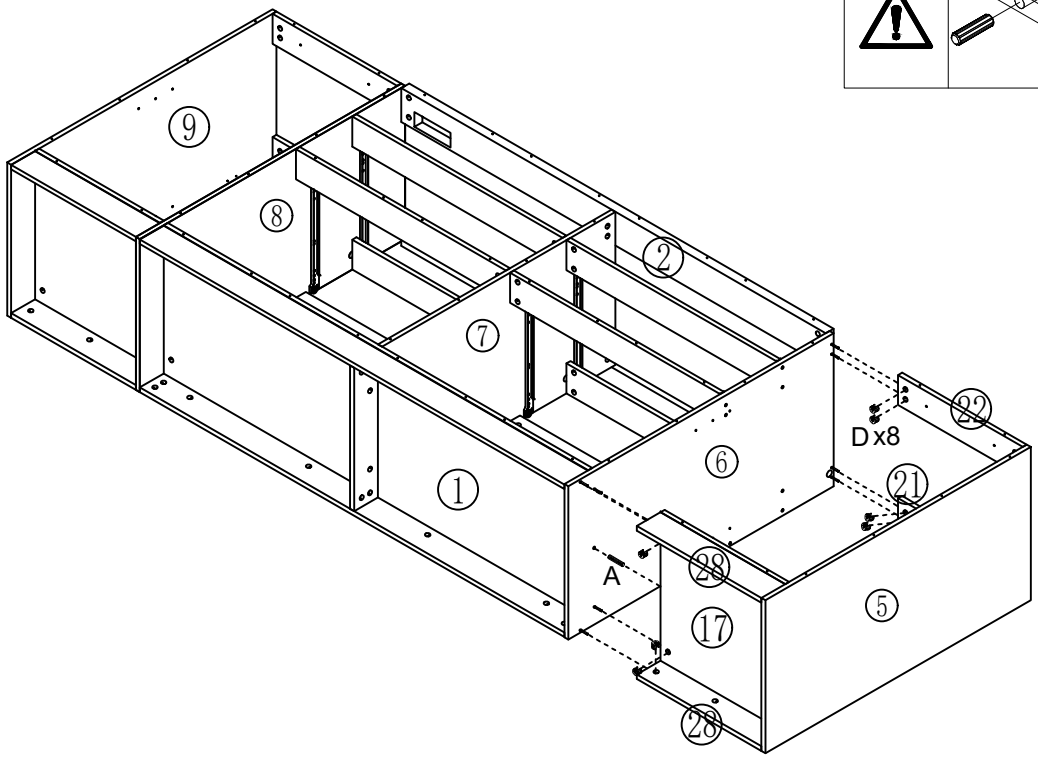

18

C	L	M
		
x40	x12	x12

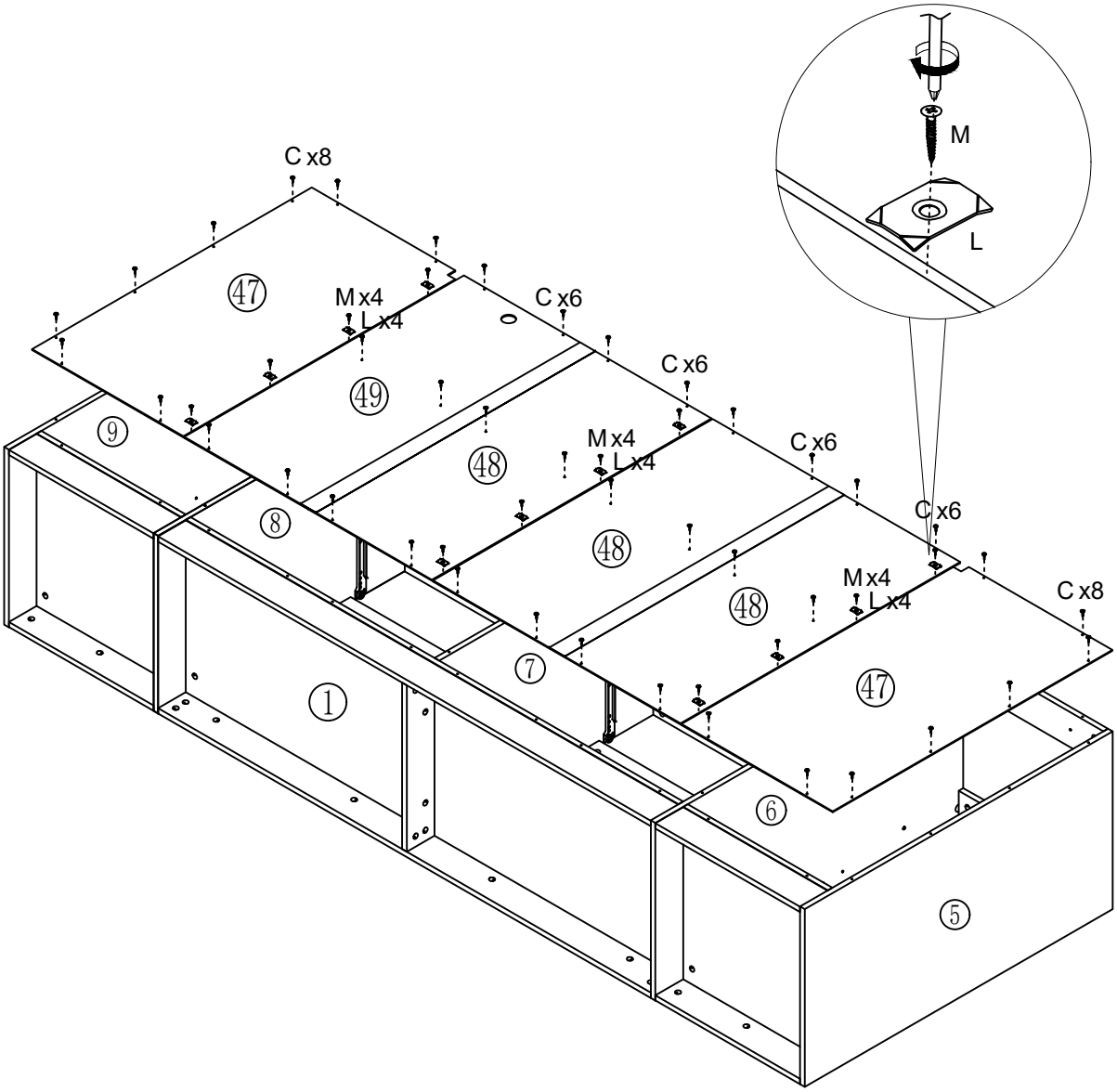

19

A x2

U x6

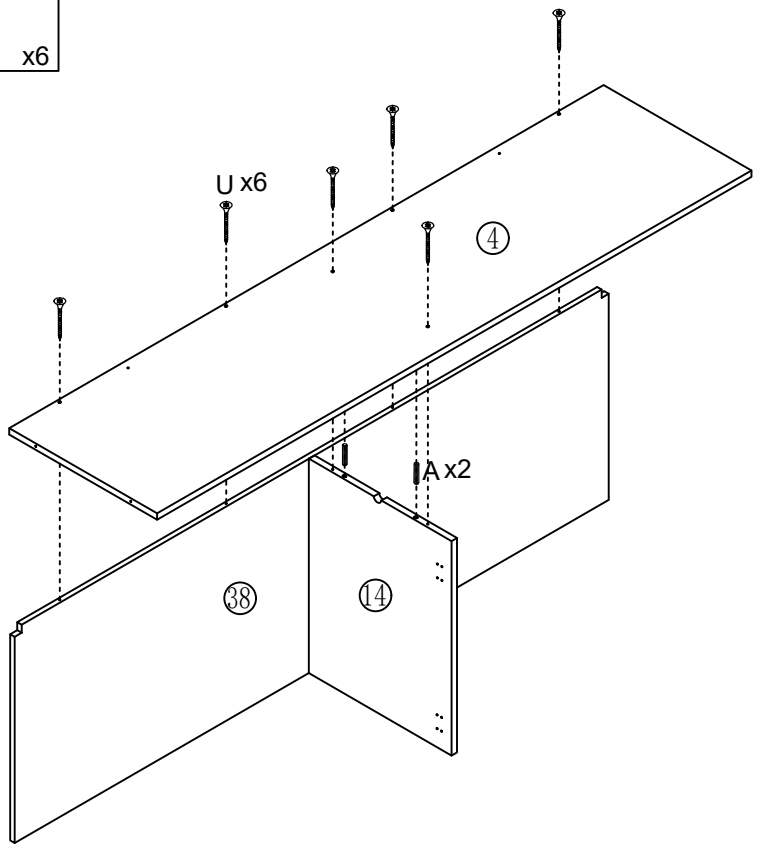

20

A x2

U x6

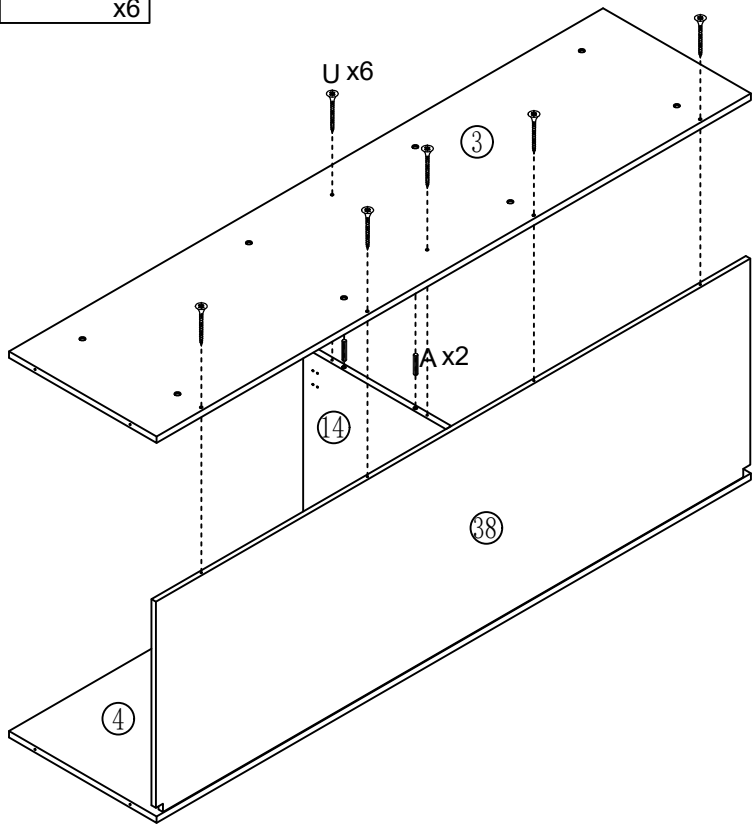

21

F x8

G x1

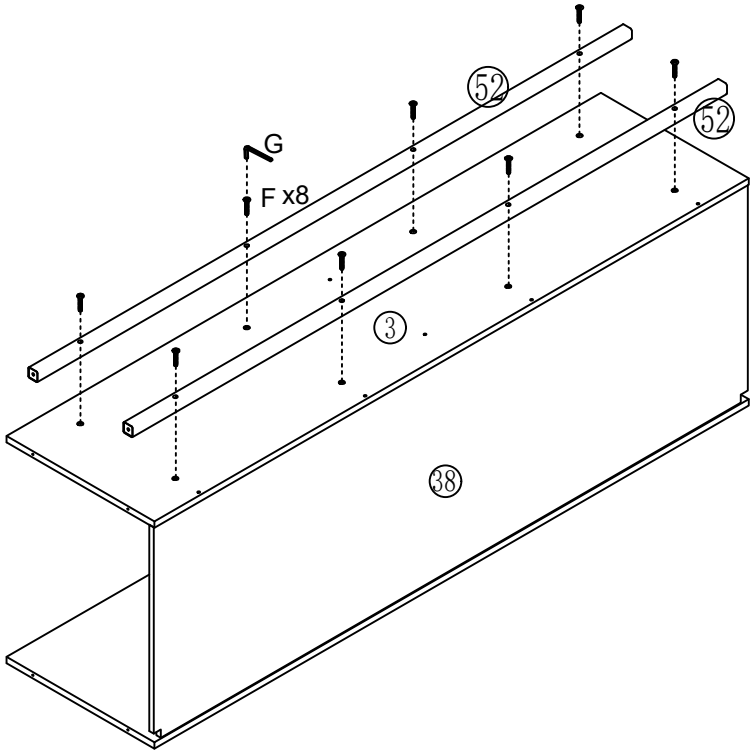

22

F x4

U x8

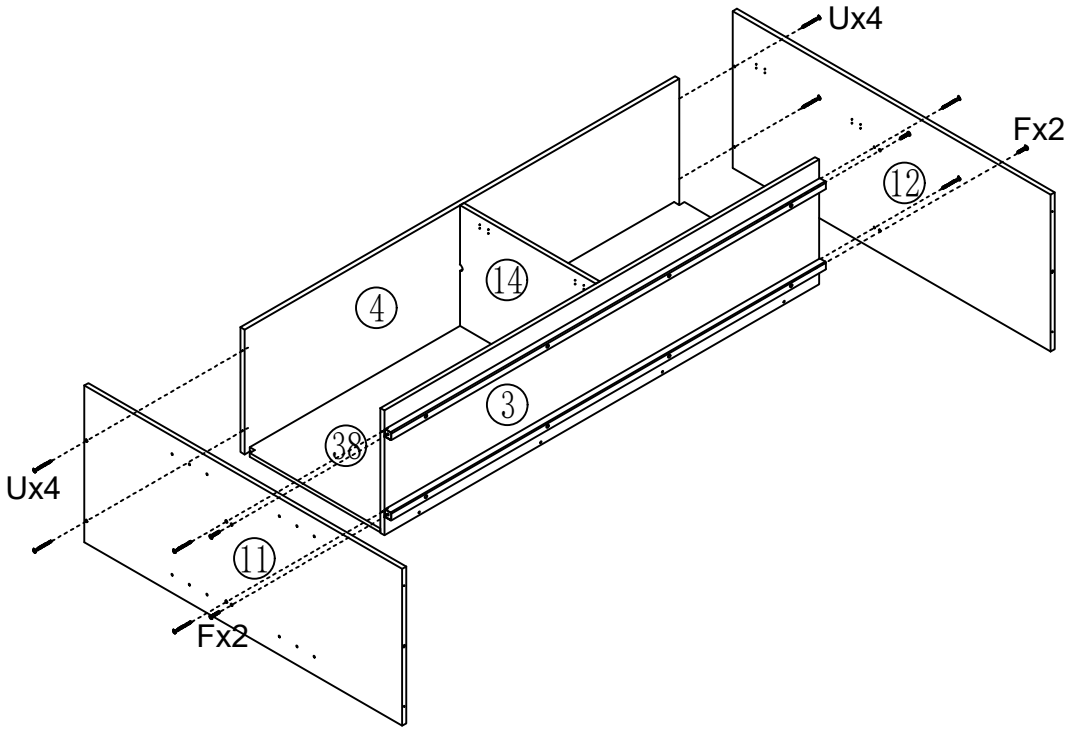

23

A x8

U x16

This is the backplane mounting guide hole. Make sure to keep it facing the same direction during installation. Subsequent installations should follow the same orientation.

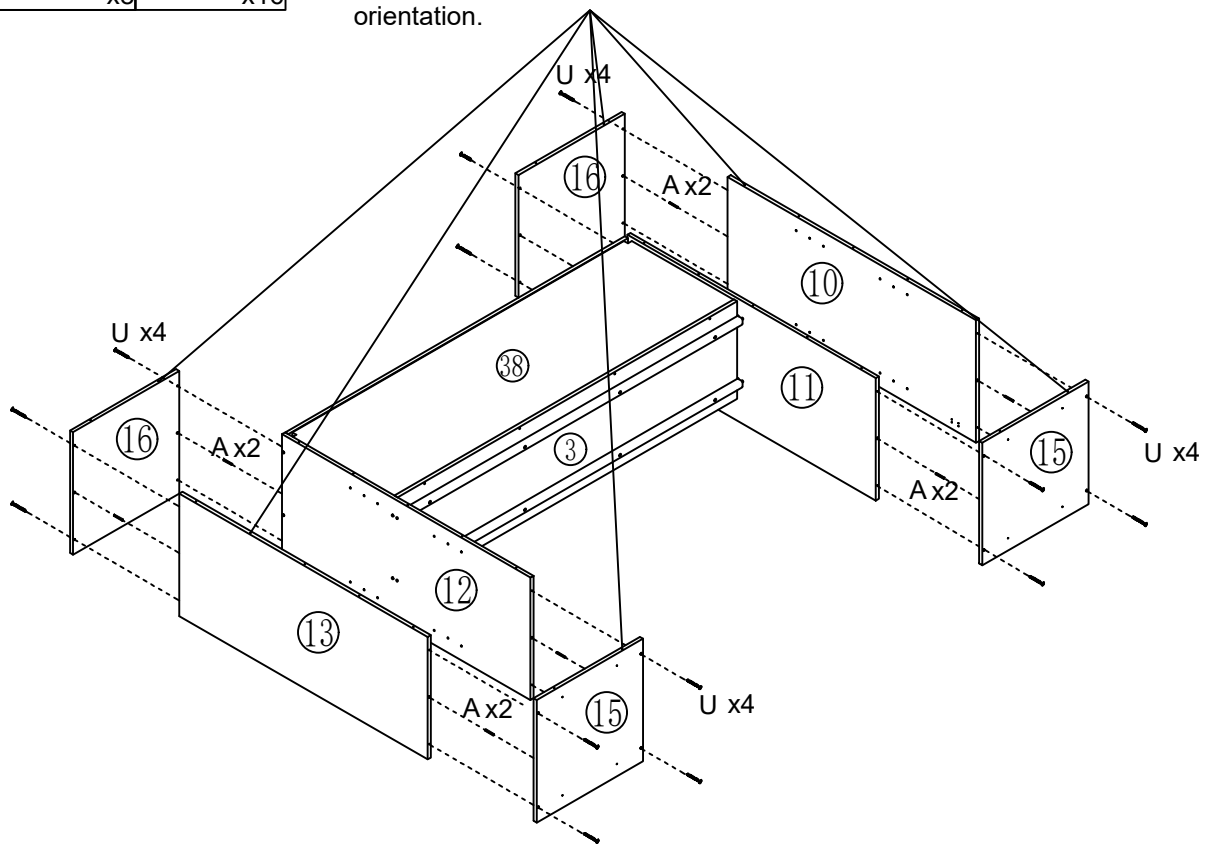

24

C x28

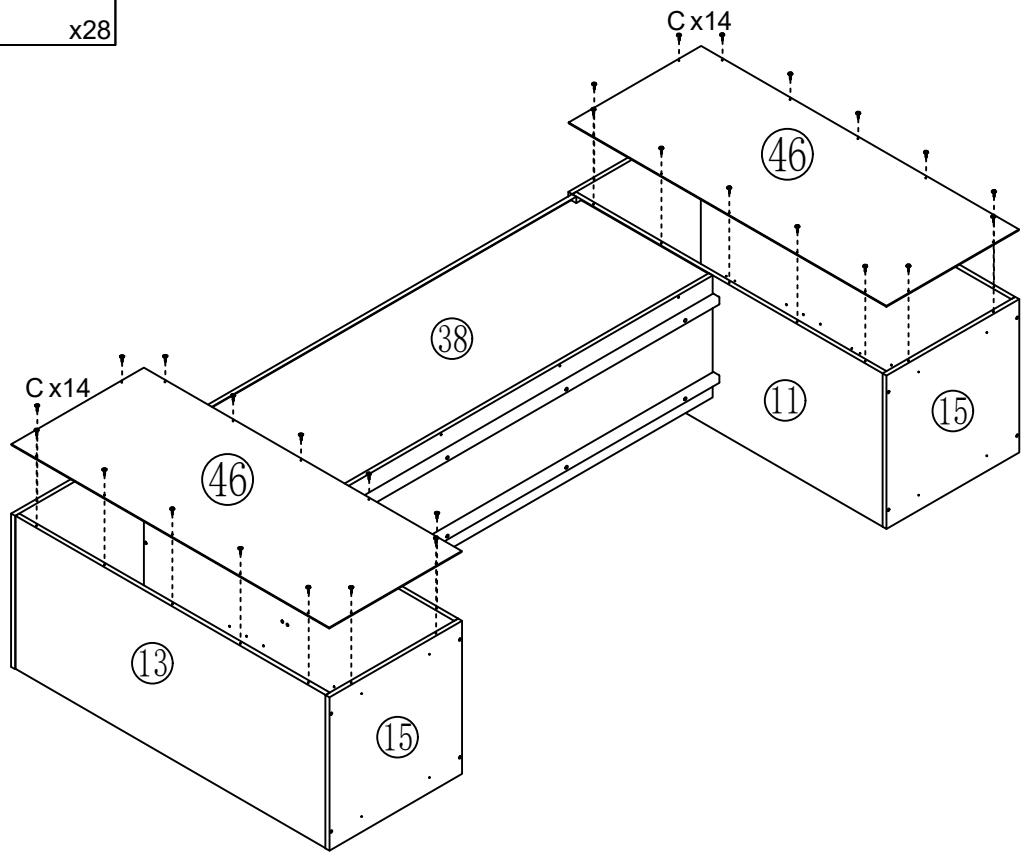

25

E



x8

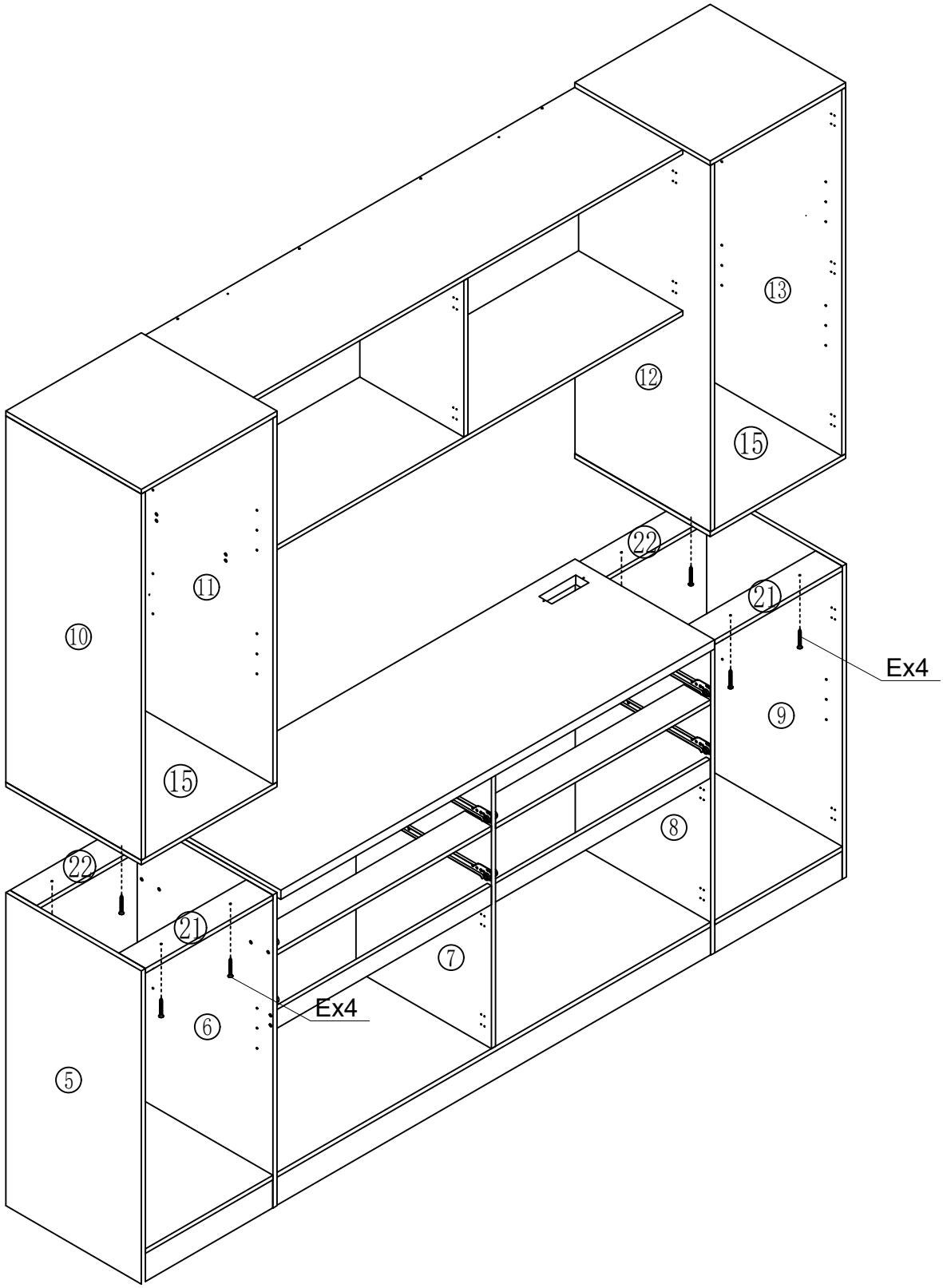

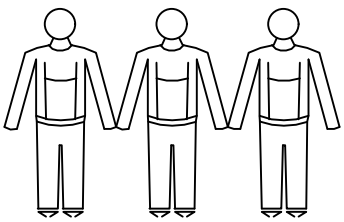

This step requires two people to operate when flipping.

26

H-a x24

H-b x24

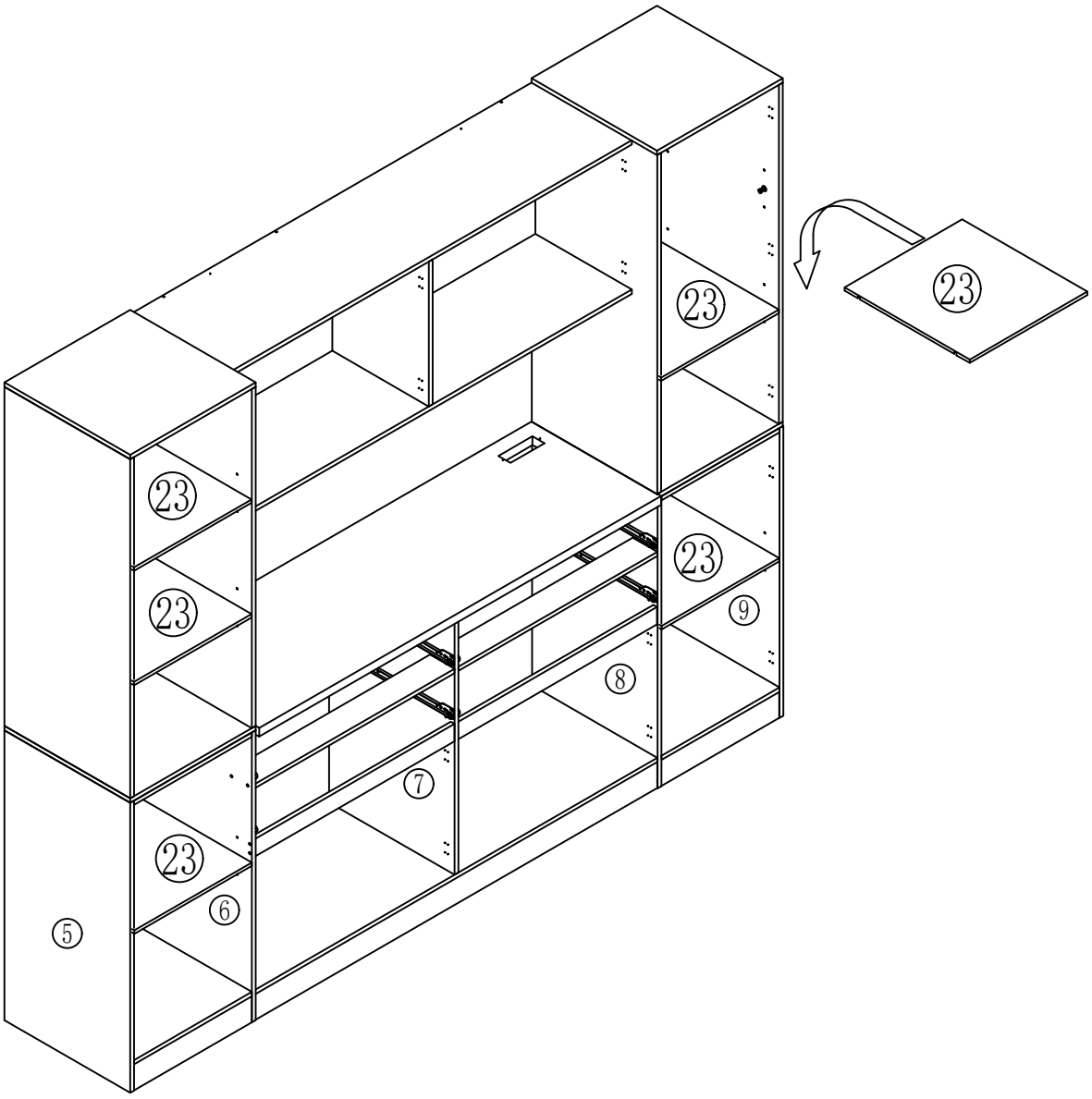

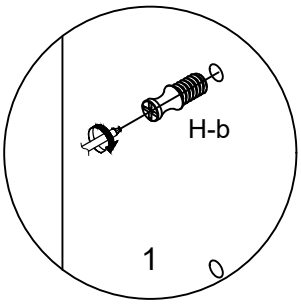

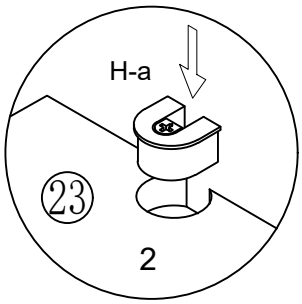

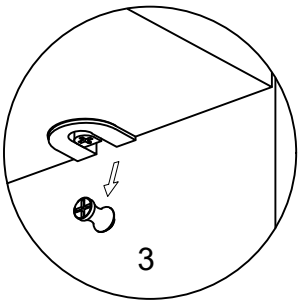

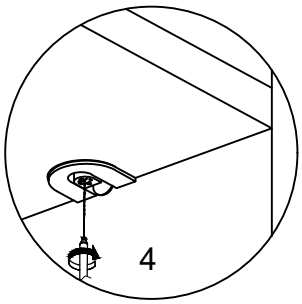

27

N

x1

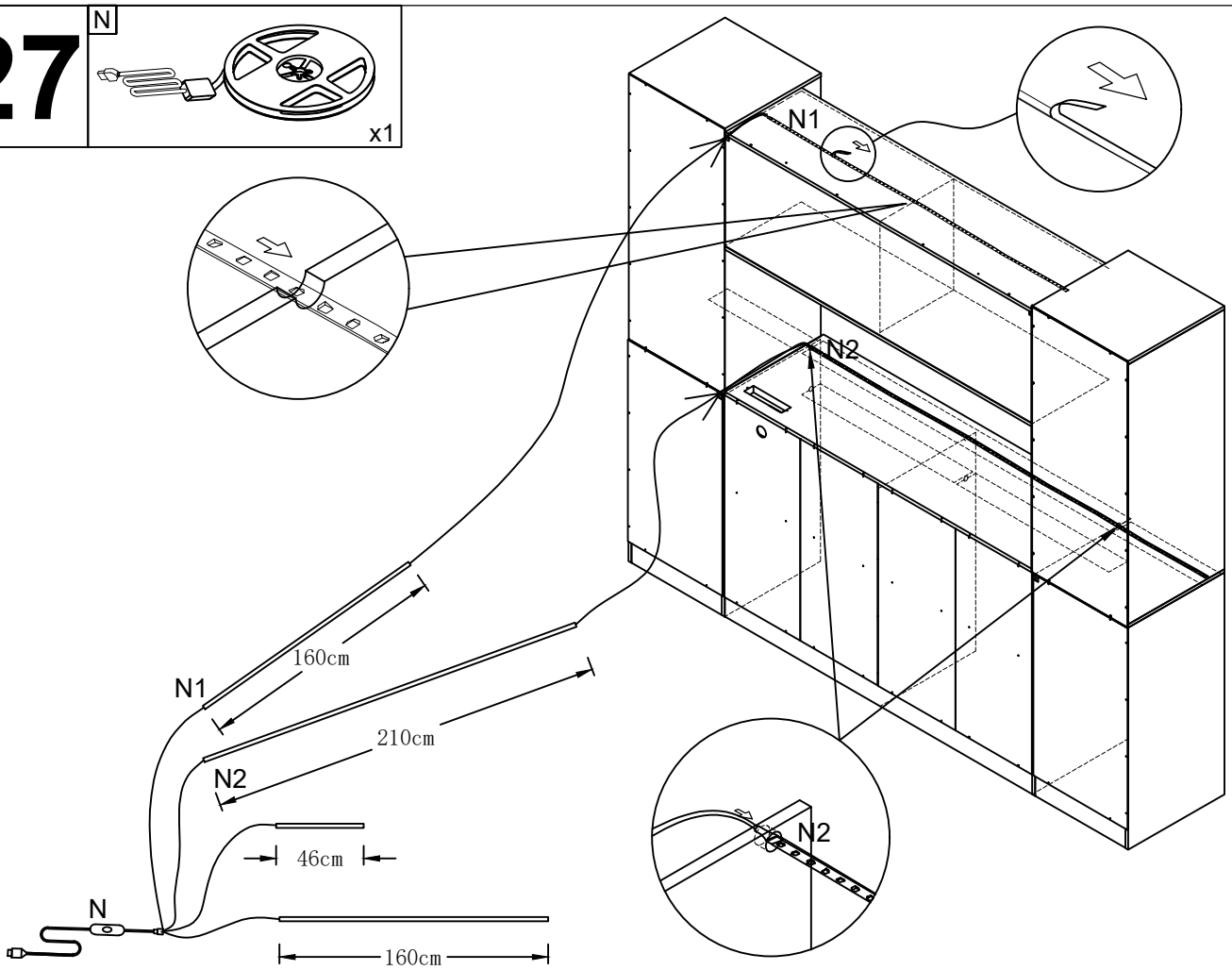

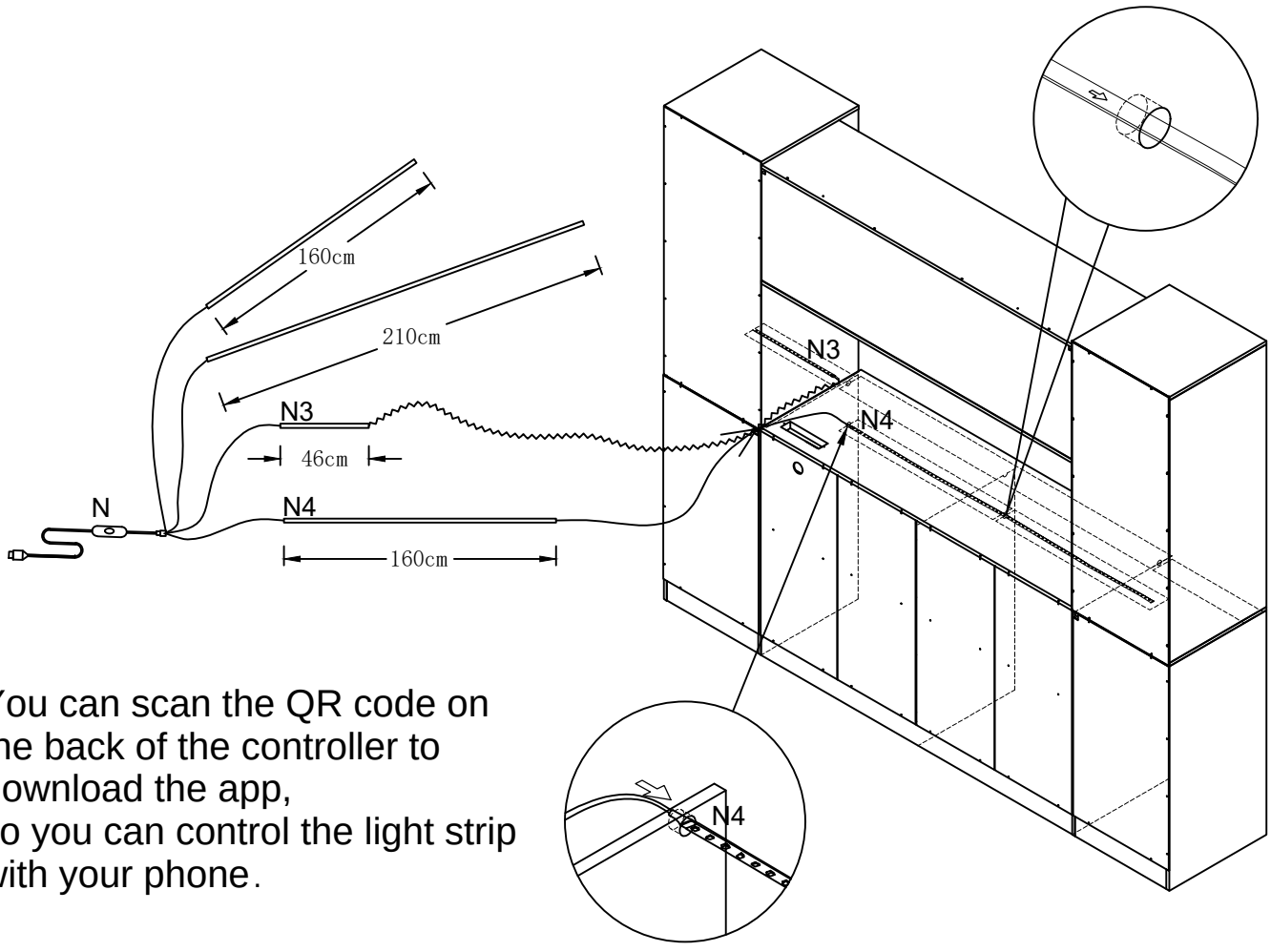

You can scan the QR code on the back of the controller to download the app,
so you can control the light strip with your phone.

28

C

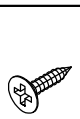

x16

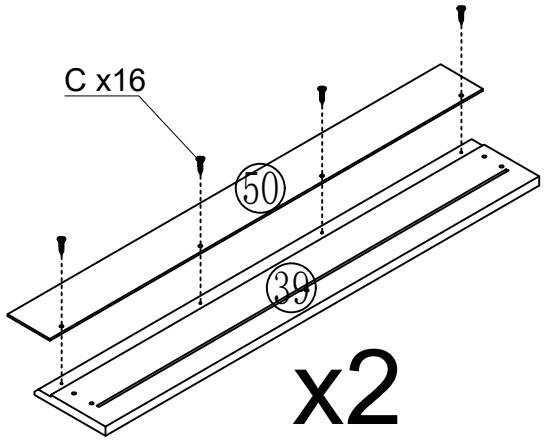

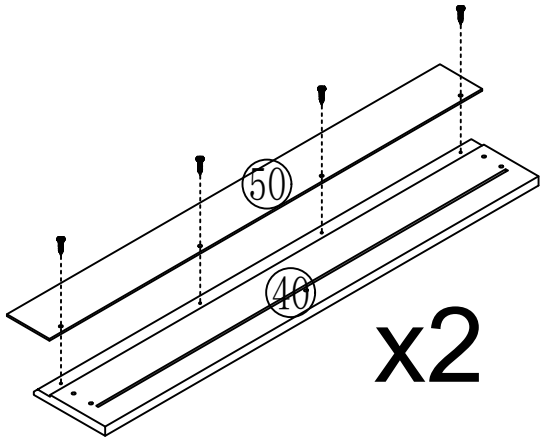

29

B



x20

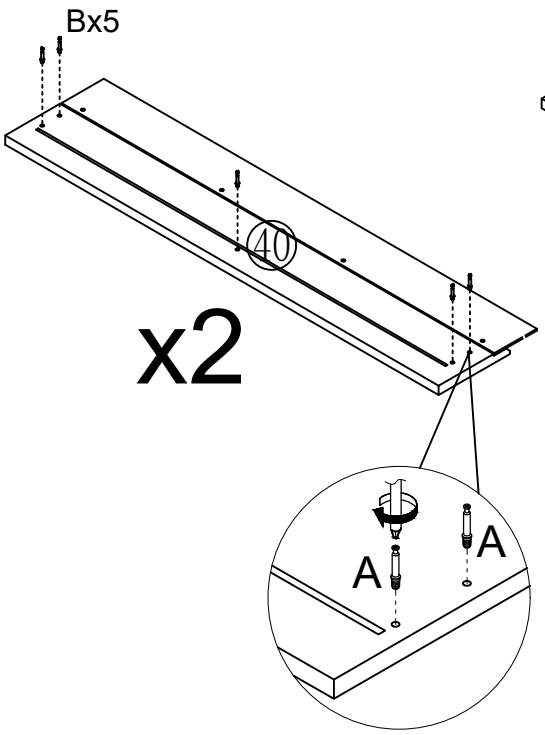

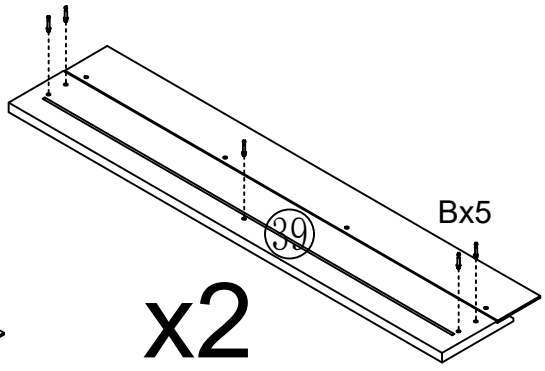

30 E x16

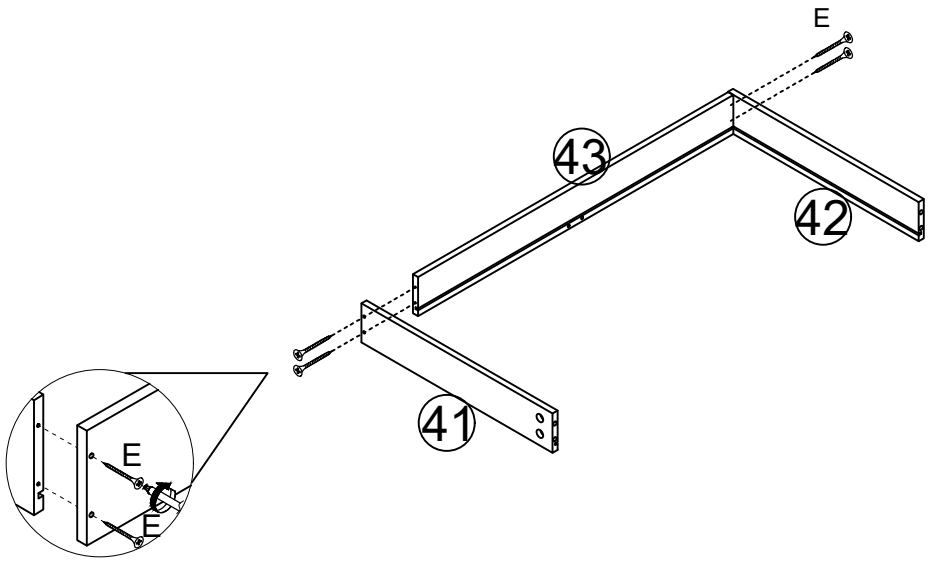

x4

31 E x8

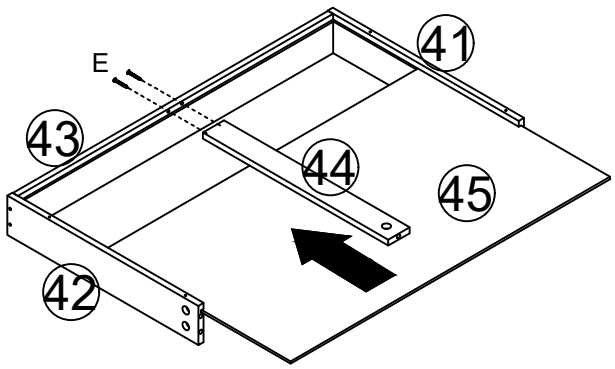

x4

32

D

x20

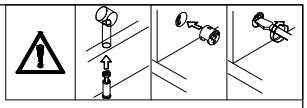

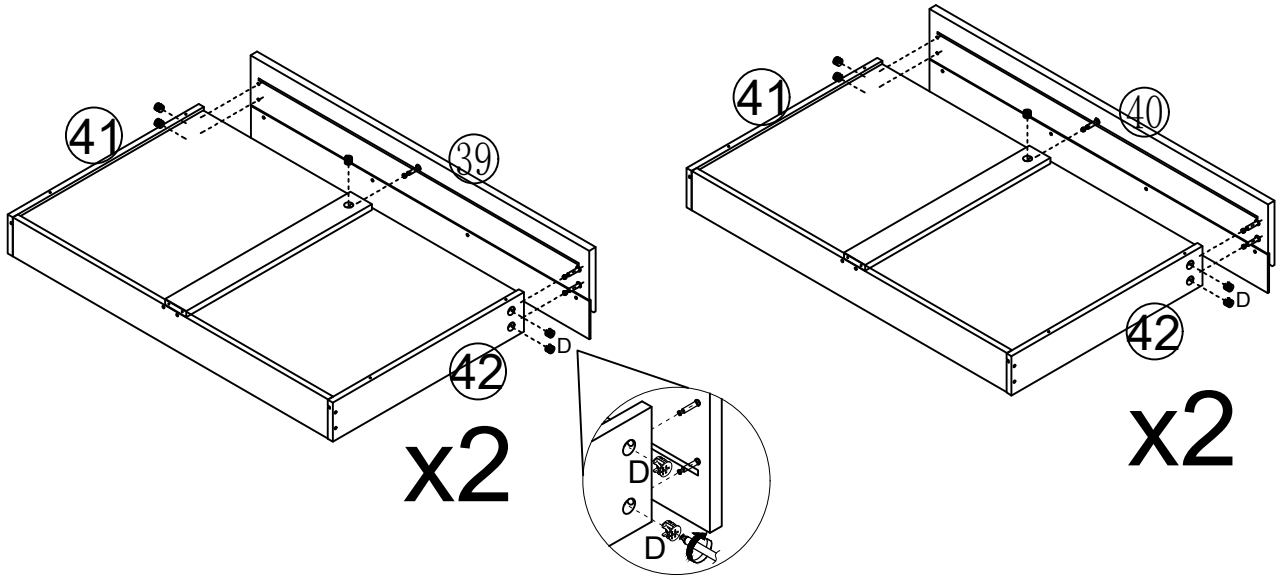

33

J-DL

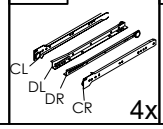

4x

K



16x

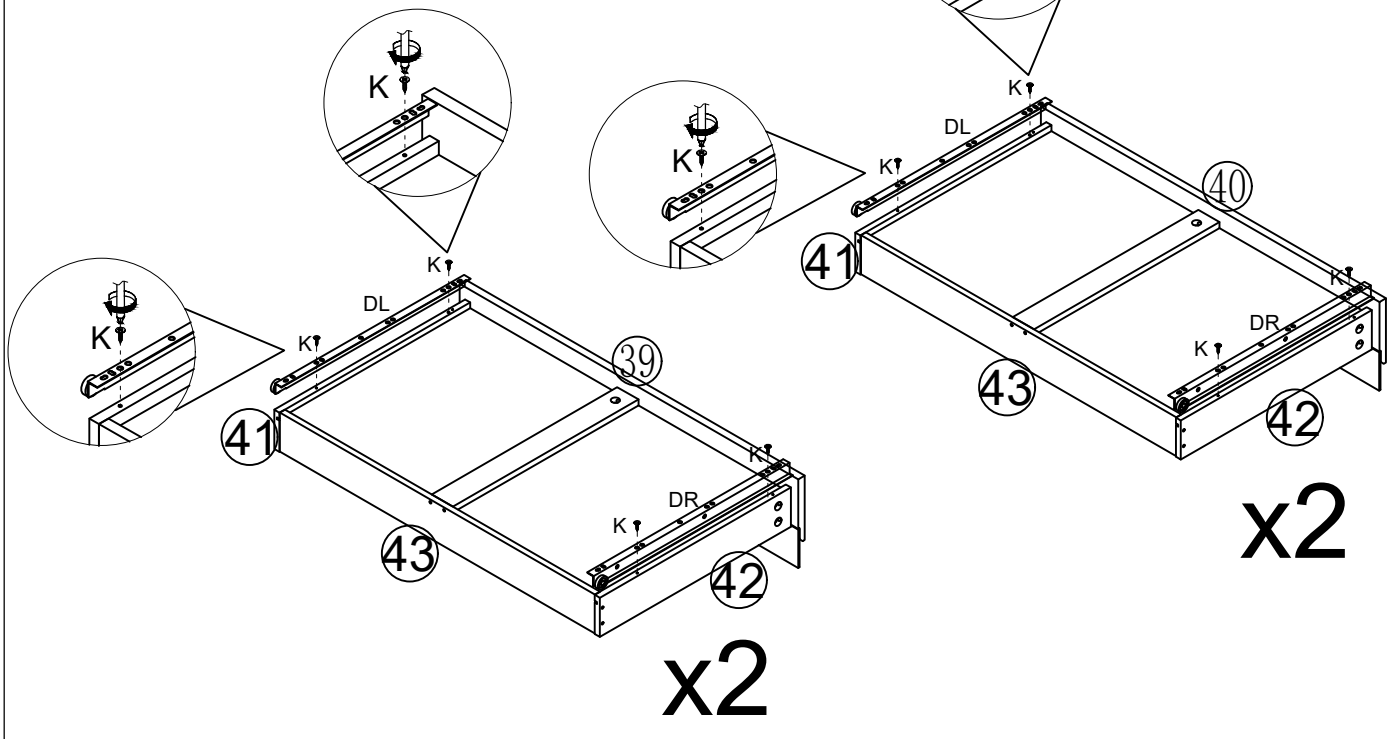

34

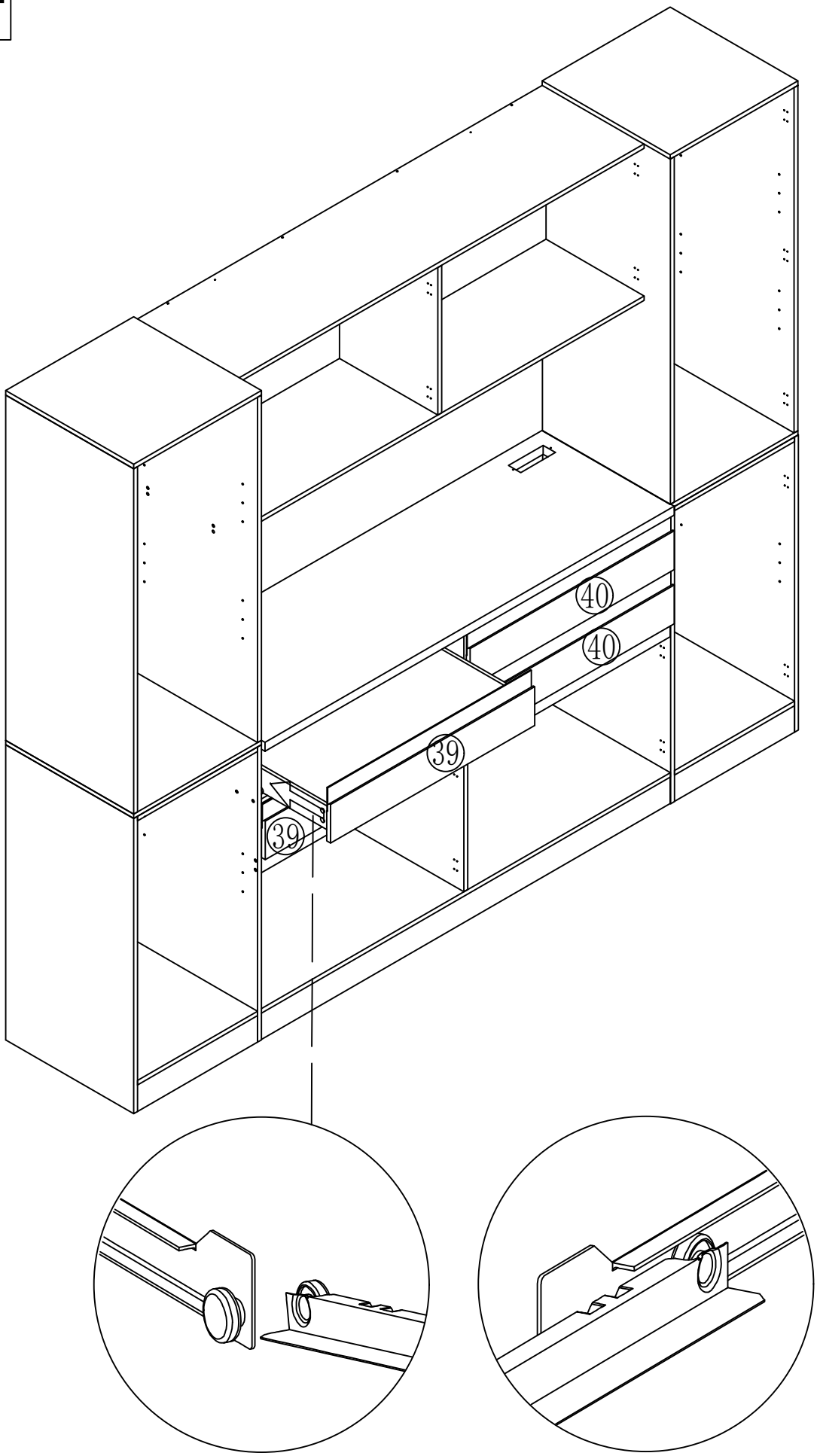

35

T

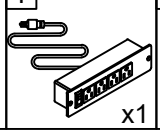

x1

C



x2

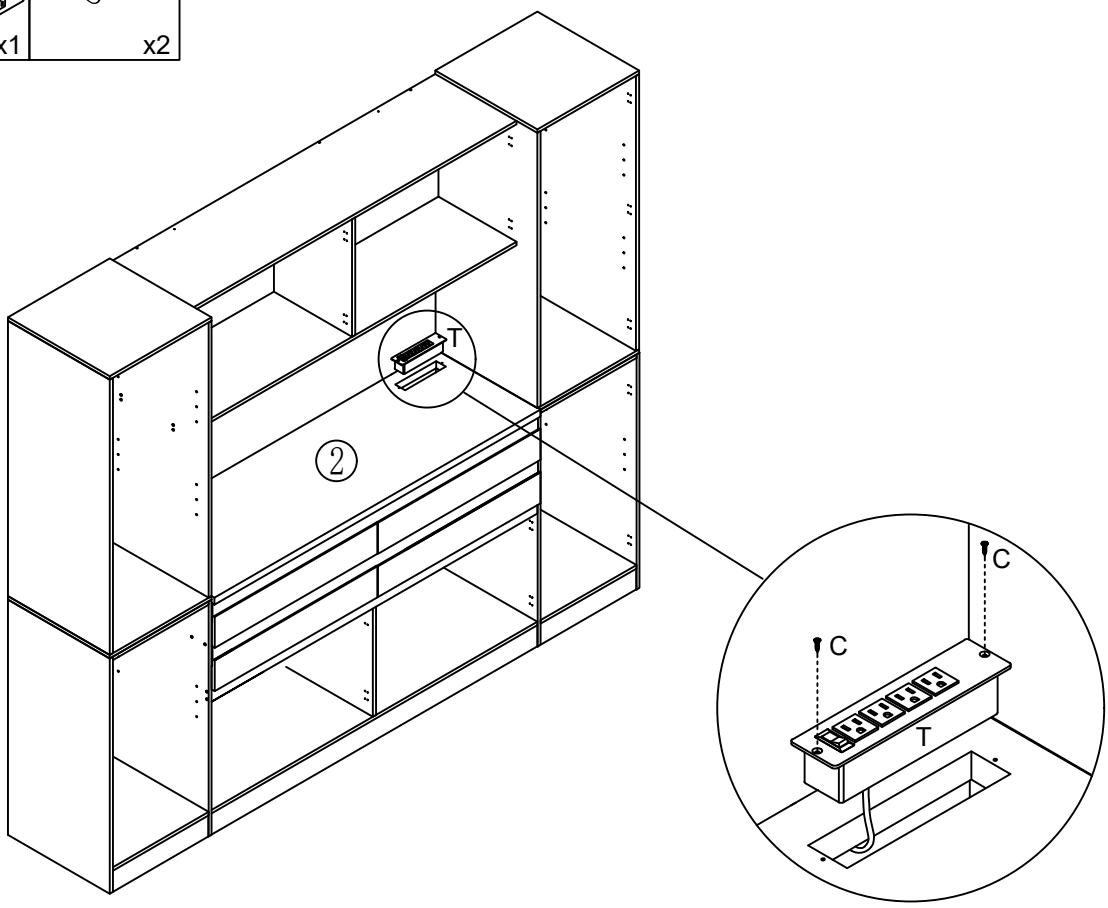

36

R

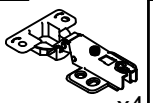

x4

C



x14

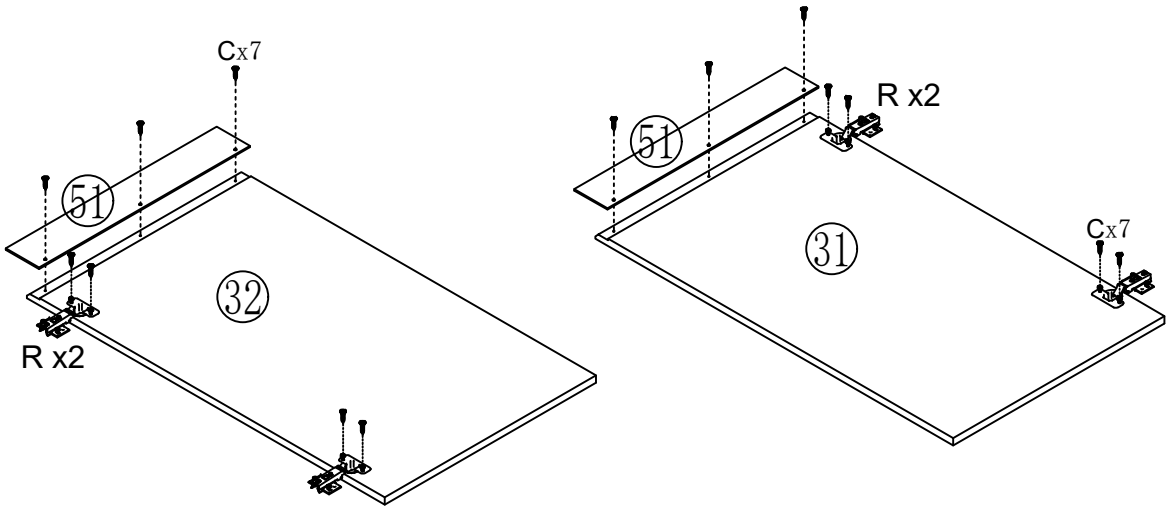

Please note, here are two different types of hinges.
The full coverage door hinges(L)are used on outermost door panel.
The curved door hinges(M) are used on the door panel in the middle of the cabinet.

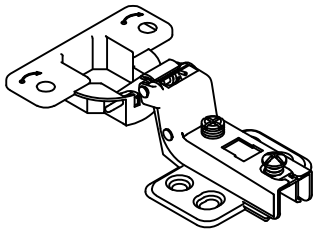

P

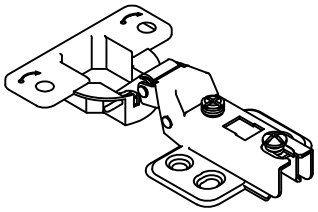

Q

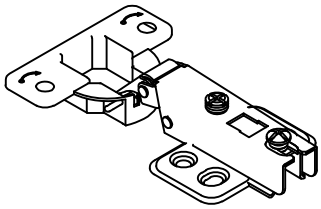

R

37	R	C
	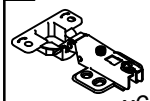 x6	 x12

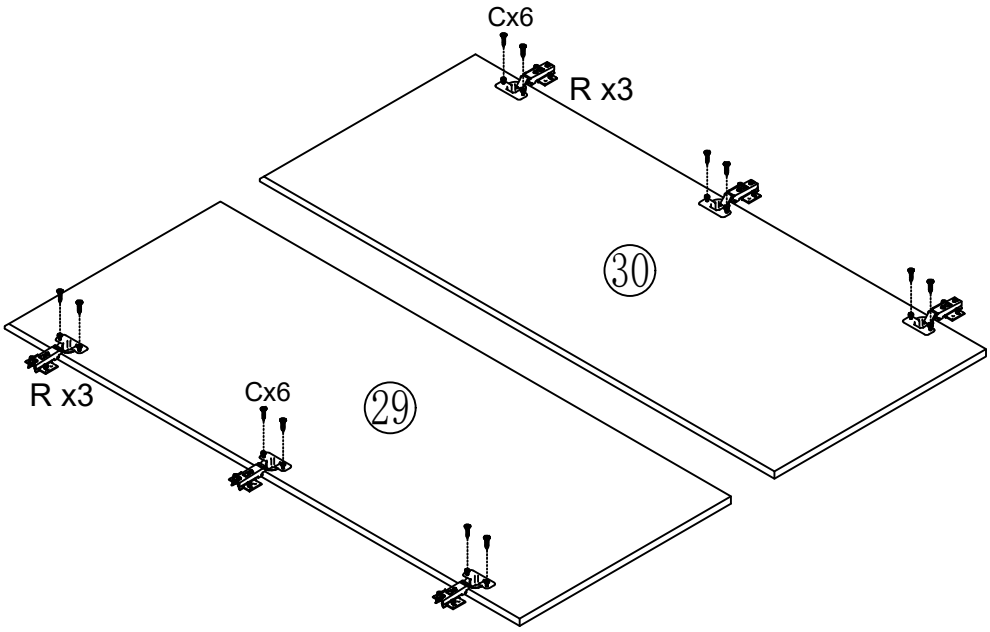

38

P	Q	C
x4	x4	x16

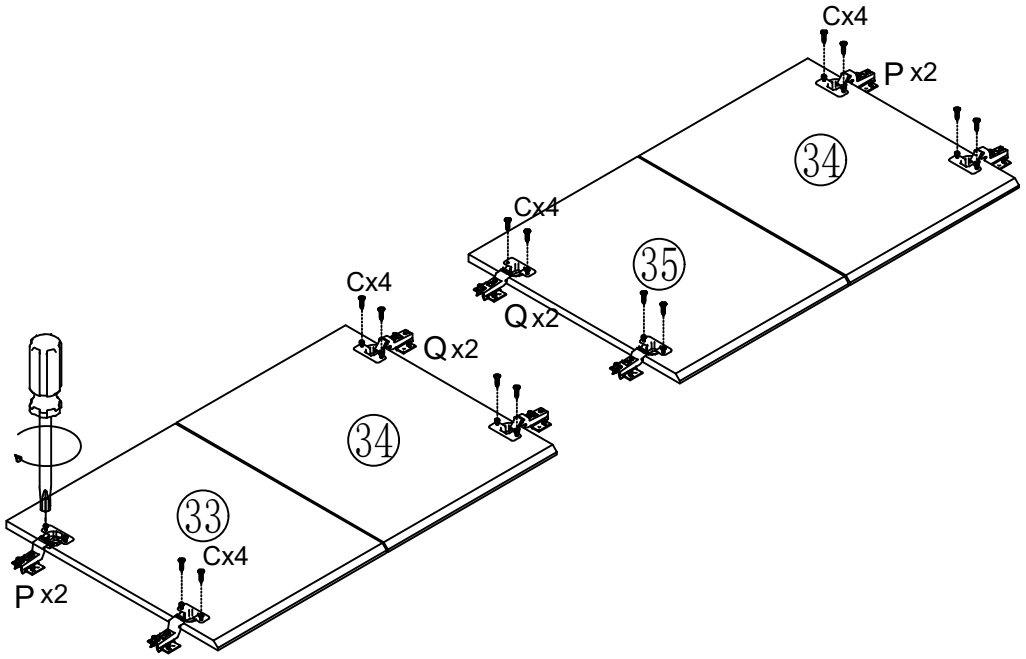

39

P	Q	C
x4	x4	x16

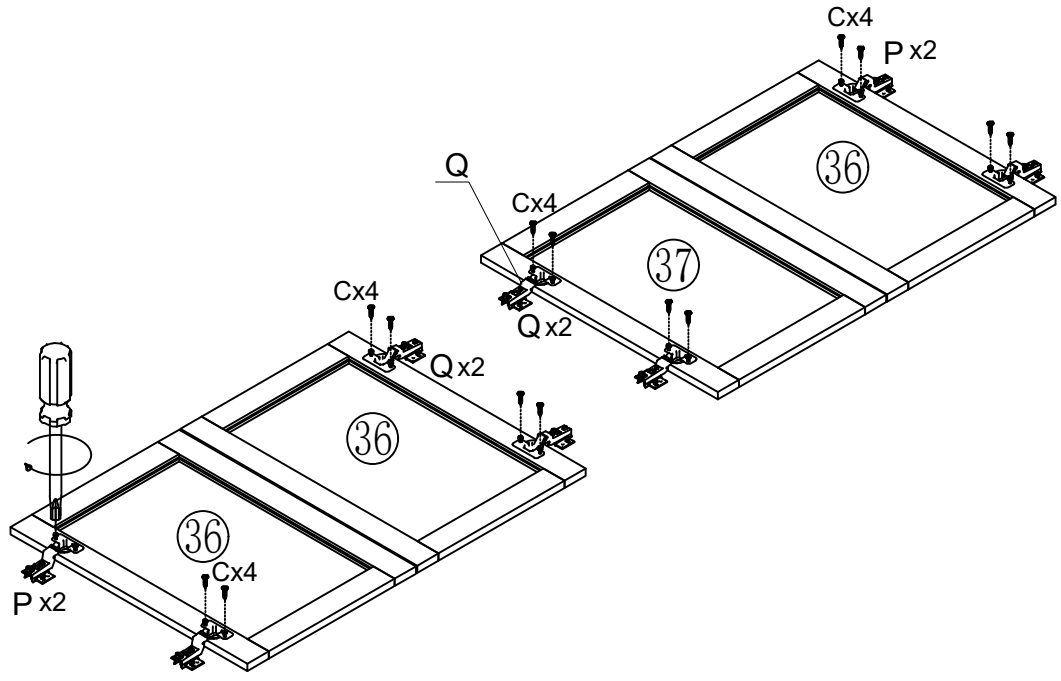

40

C

x104

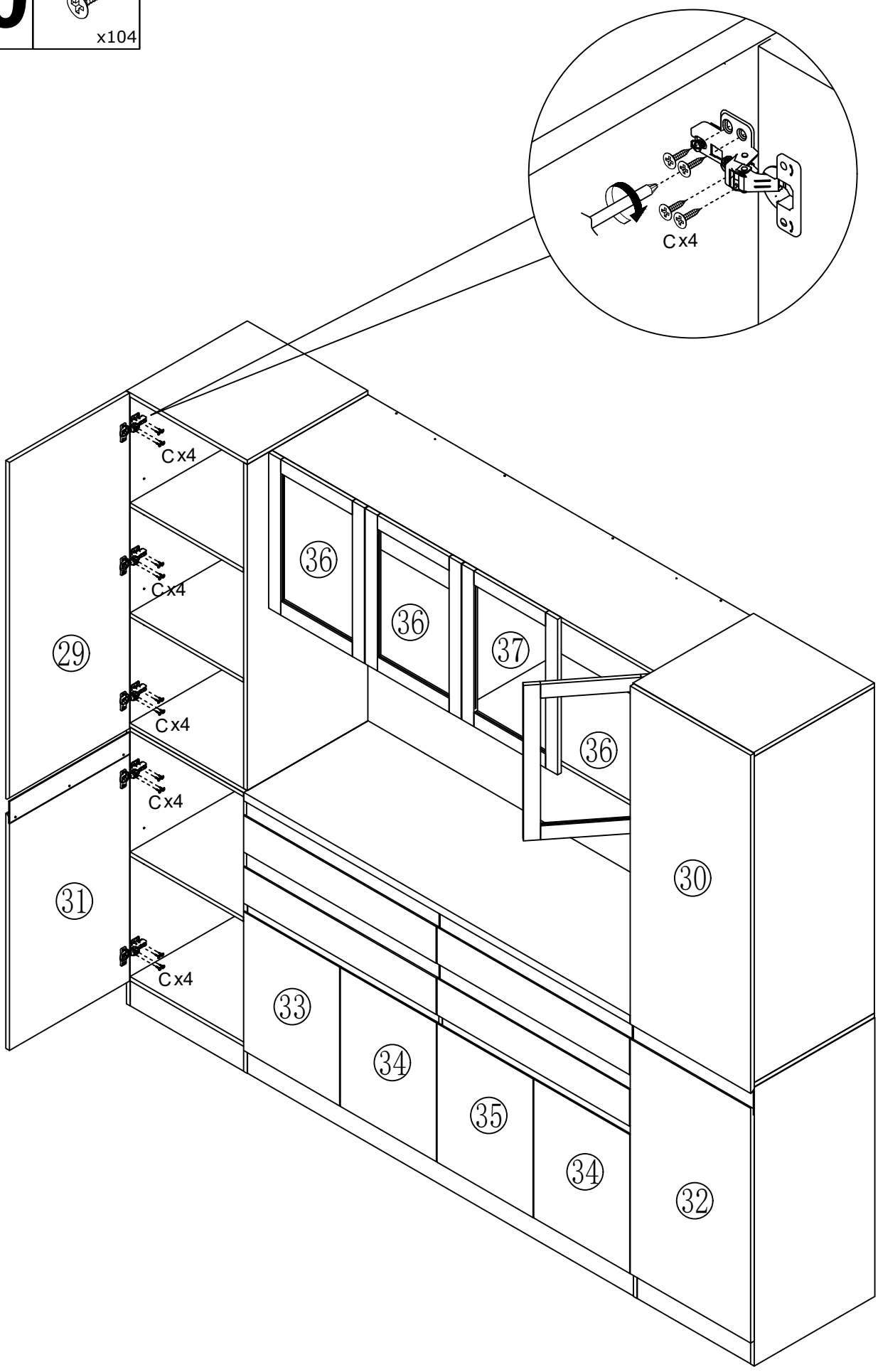

When the clearance of the door is uneven, adjust the cabinet door according to the figure. If you still have trouble adjusting the door, please contact us.

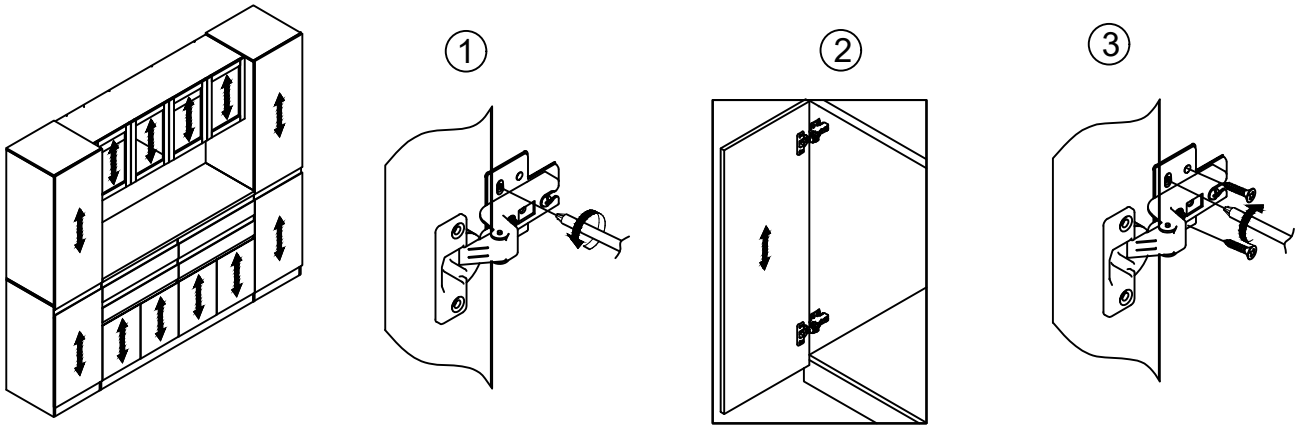

Up and downadjustment byloosening the screwson the mountingplate.

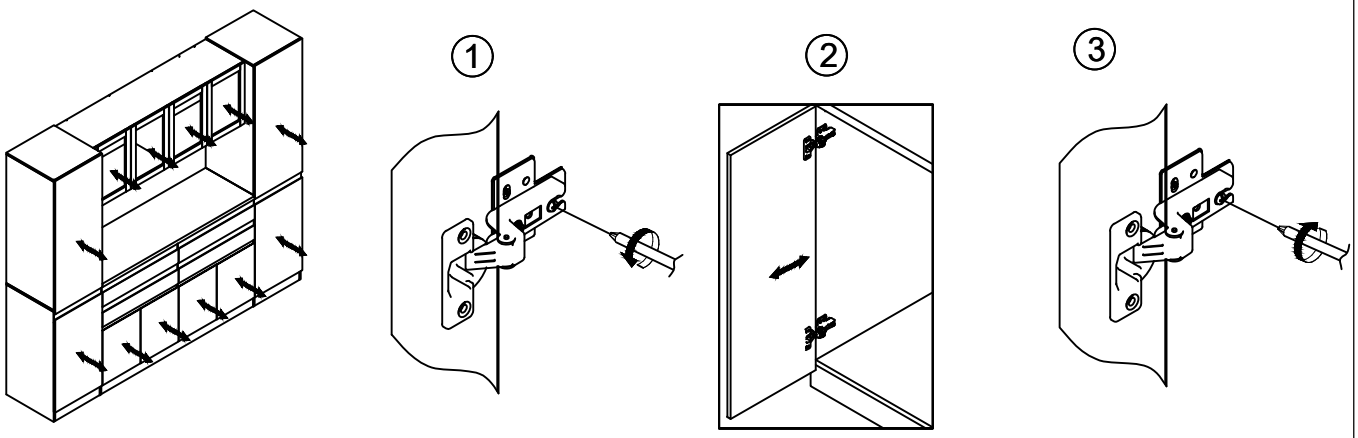

In-and-out adjustment by loosening the screws on the hinge arm.

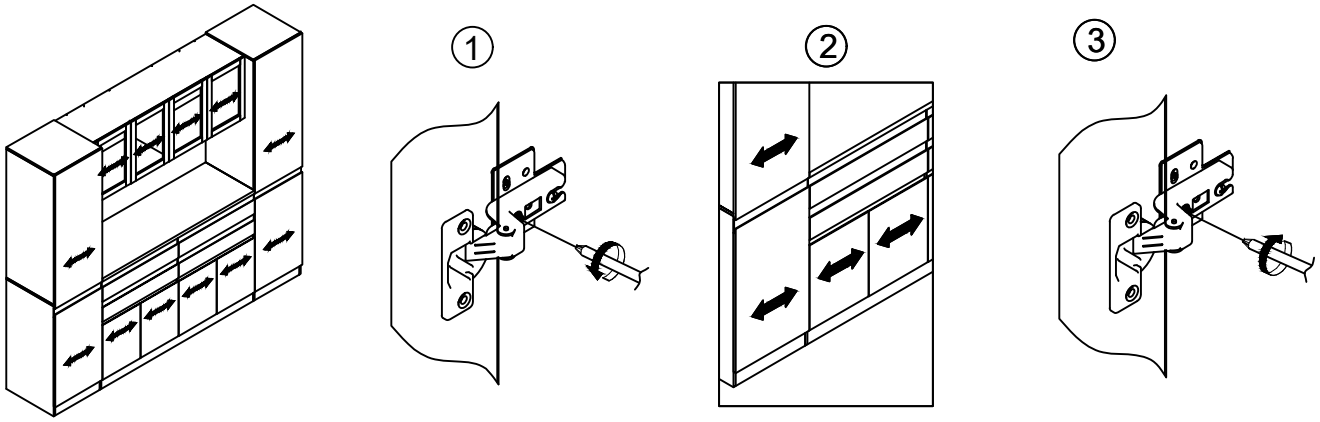

Side-to-side adjustment using the front adjustment screw on the hinge.

41

S

x2

