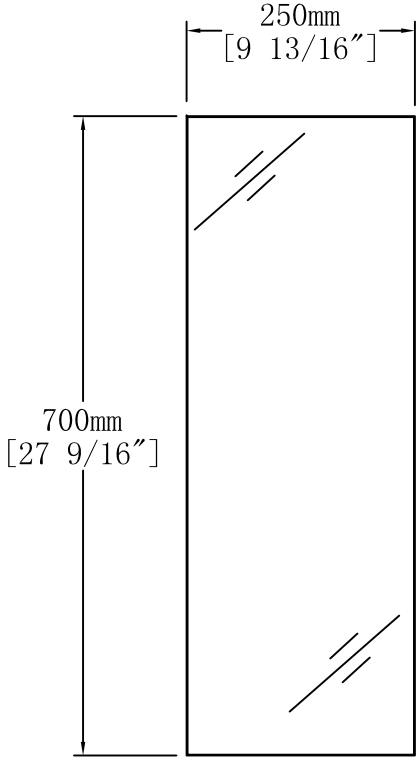
250mm
[9 13/16″]
700mm
[27 9/16″]

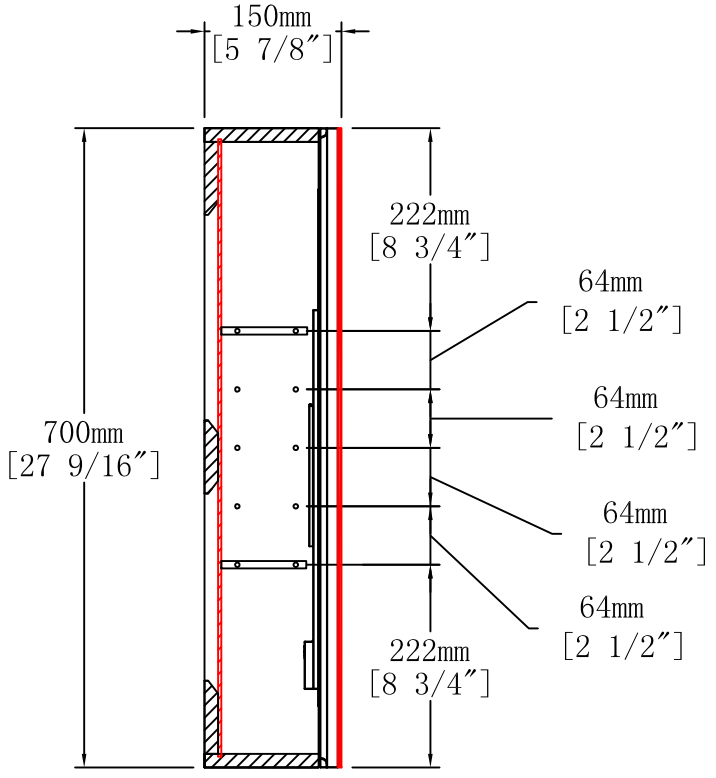
150mm
[5 7/8″]
700mm
[27 9/16″]
222mm
[8 3/4″]
64mm
[2 1/2″]
64mm
[2 1/2″]
64mm
[2 1/2″]
64mm
[2 1/2″]
222mm
[8 3/4″]

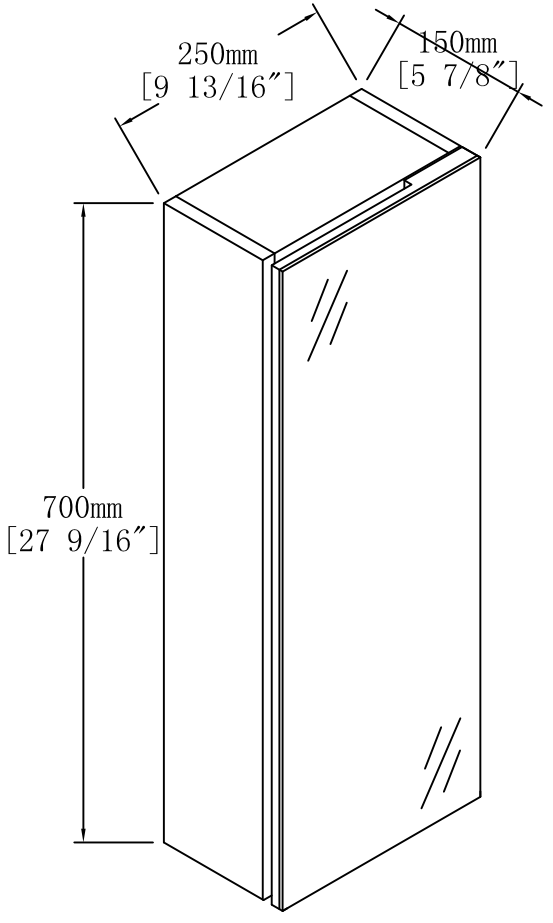
250mm
[9 13/16″]
150mm
[5 7/8″]
700mm
[27 9/16″]

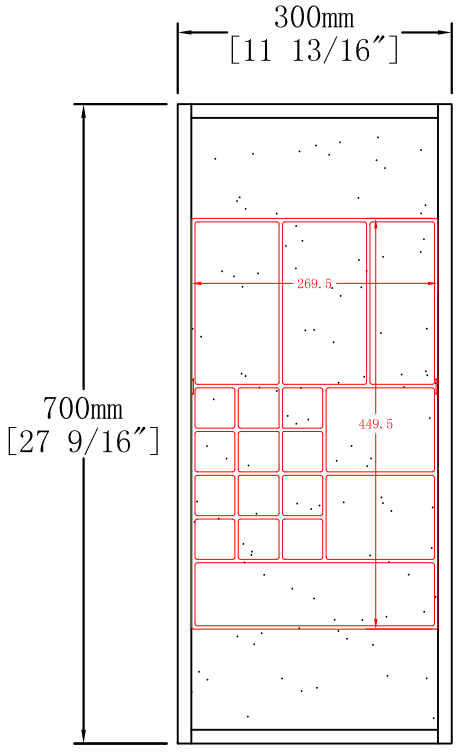
300mm
[11 13/16″]
700mm
[27 9/16″]
269.5
449.5

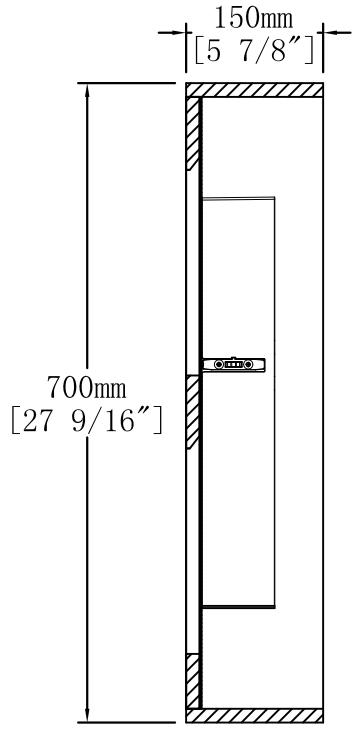
150mm
[5 7/8″]
700mm
[27 9/16″]

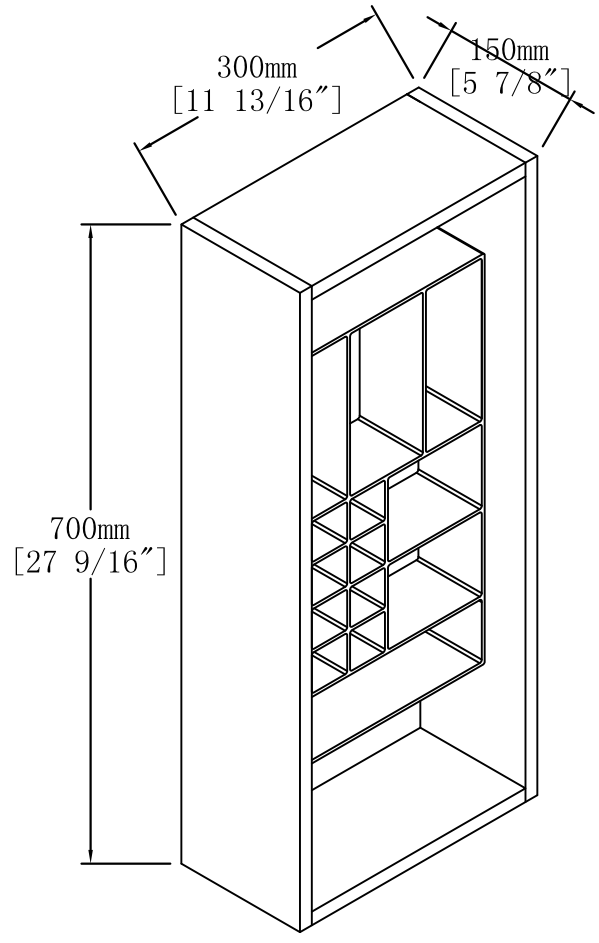
300mm
[11 13/16″]
150mm
[5 7/8″]
700mm
[27 9/16″]