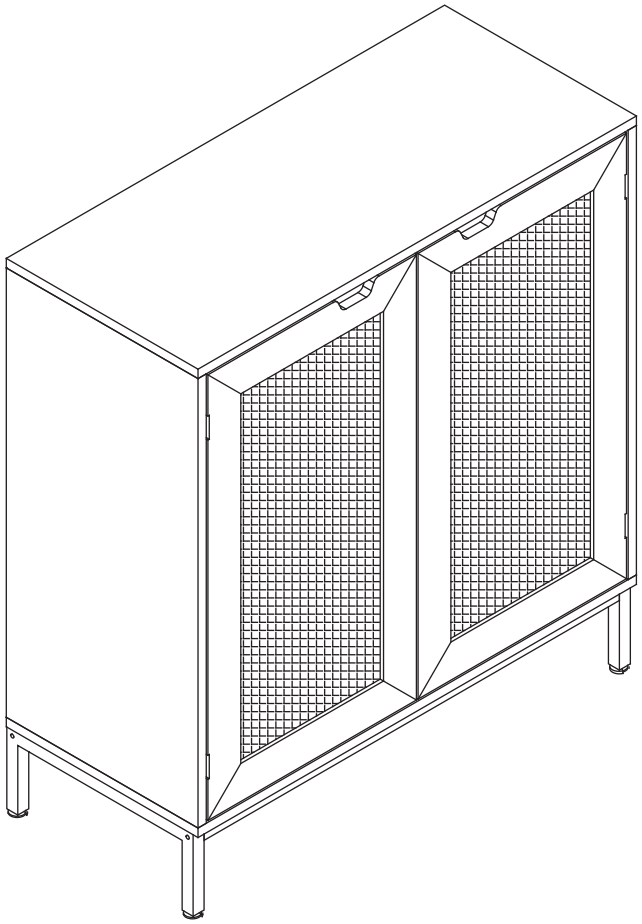

STORAGE CABINET

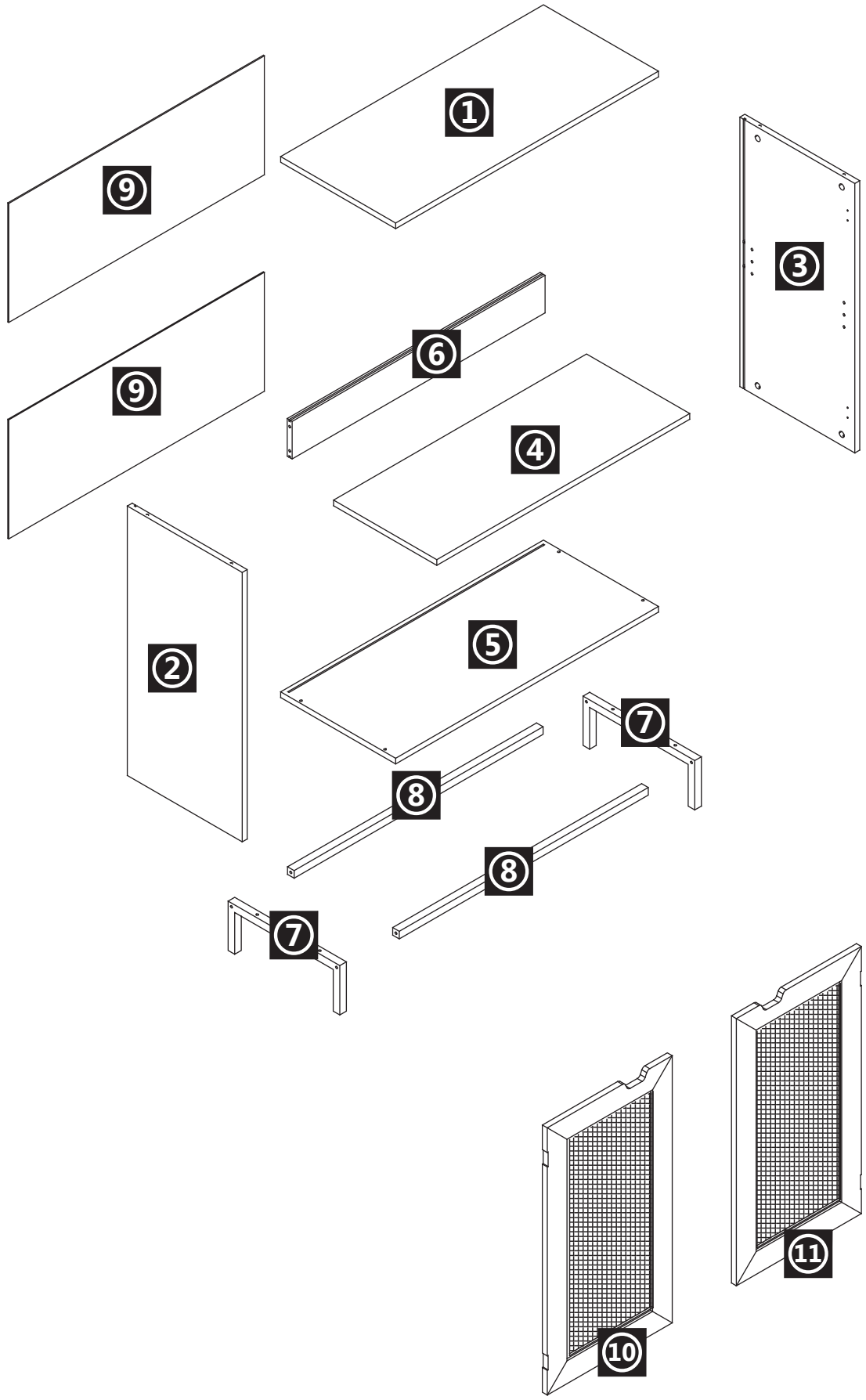
①
②
③
④
⑤
⑥
⑦
⑧
⑨
⑩
⑪

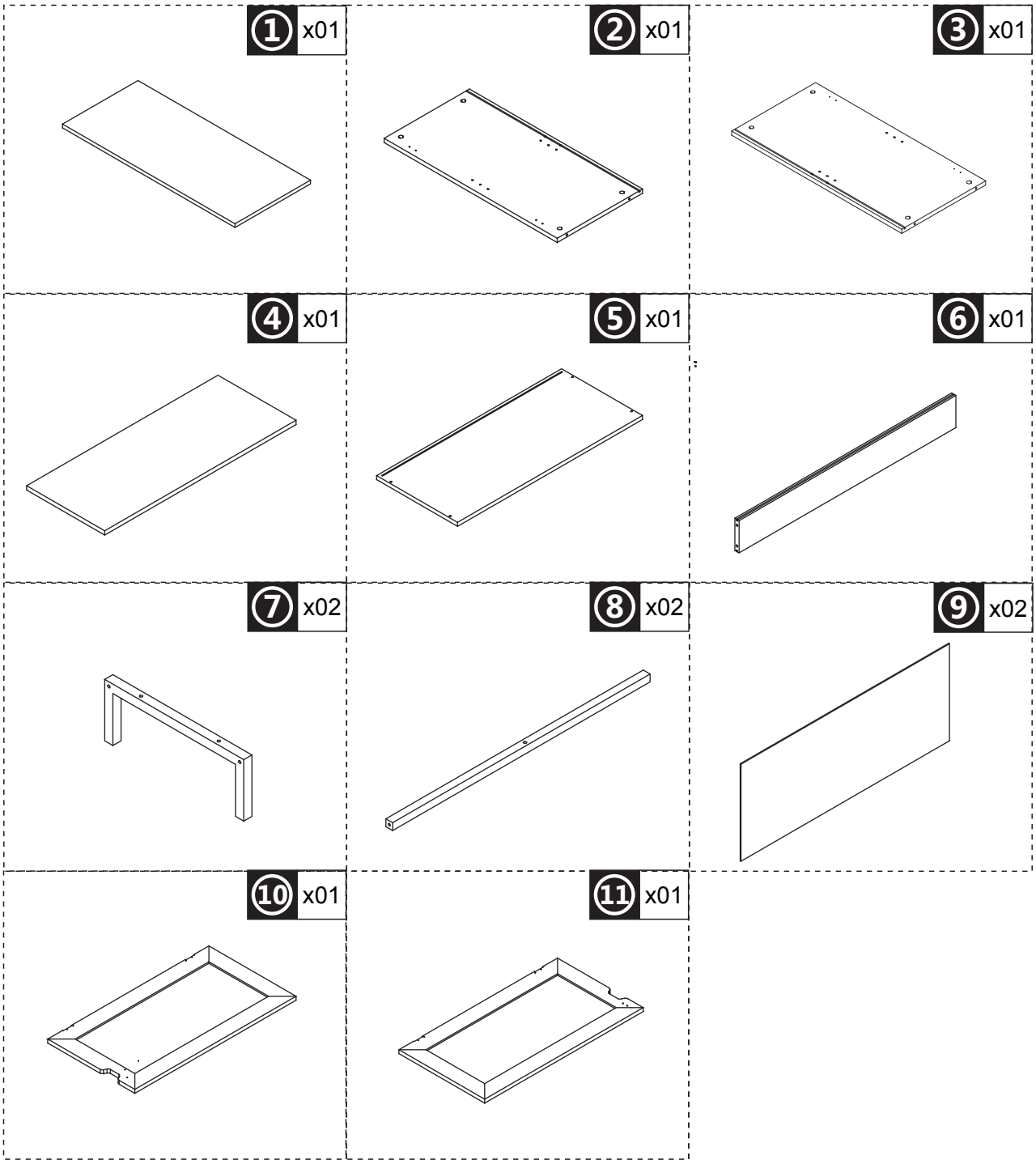
① x01
② x01
③ x01
④ x01
⑤ x01
⑥ x01
⑦ x02
⑧ x02
⑨ x02
⑩ x01
⑪ x01

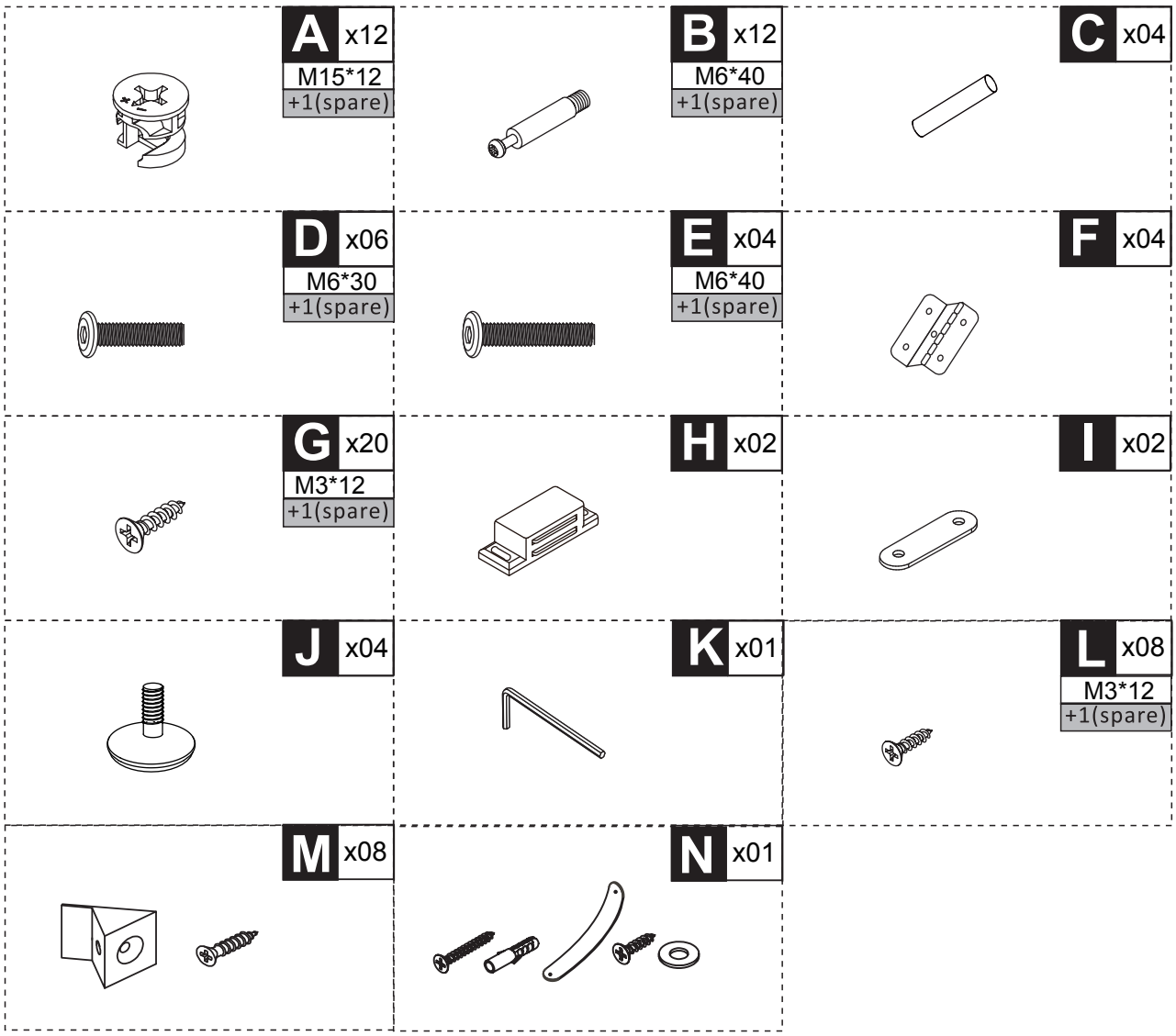
A x12
M15*12
+1(spare)
B x12
M6*40
+1(spare)
C x04
D x06
M6*30
+1(spare)
E x04
M6*40
+1(spare)
F x04
G x20
M3*12
+1(spare)
H x02
I x02
J x04
K x01
L x08
M3*12
+1(spare)
M x08
N x01

01

E x2

K x1

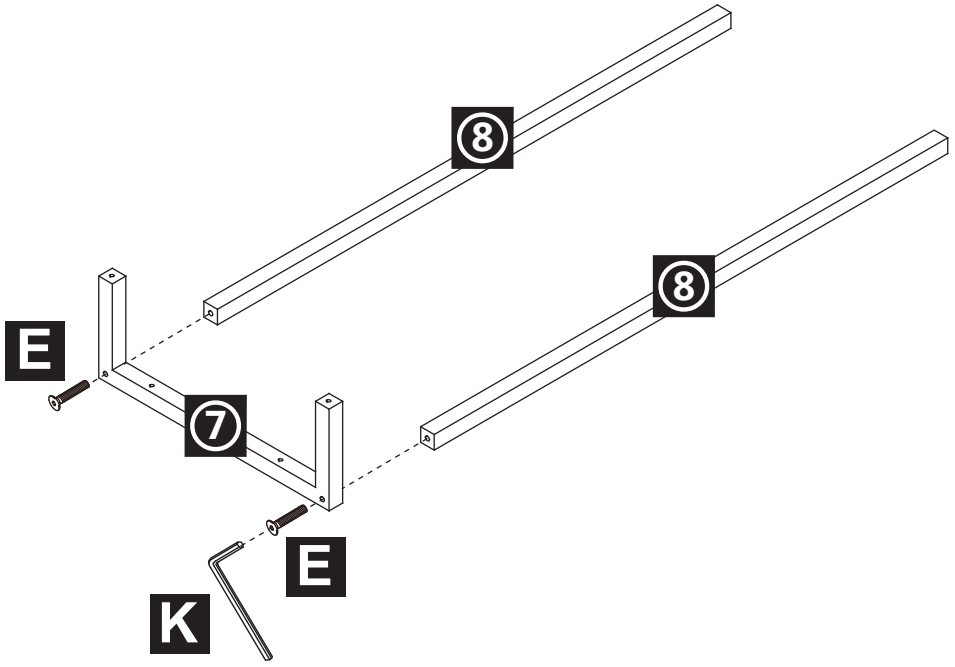

02

E x2

K x1

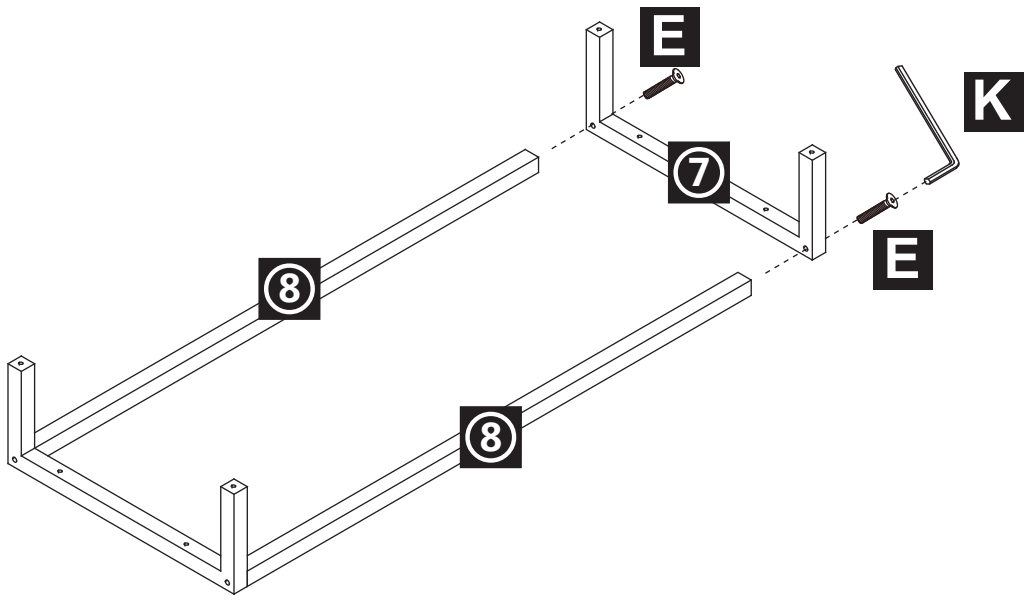

03

D x6

K x1

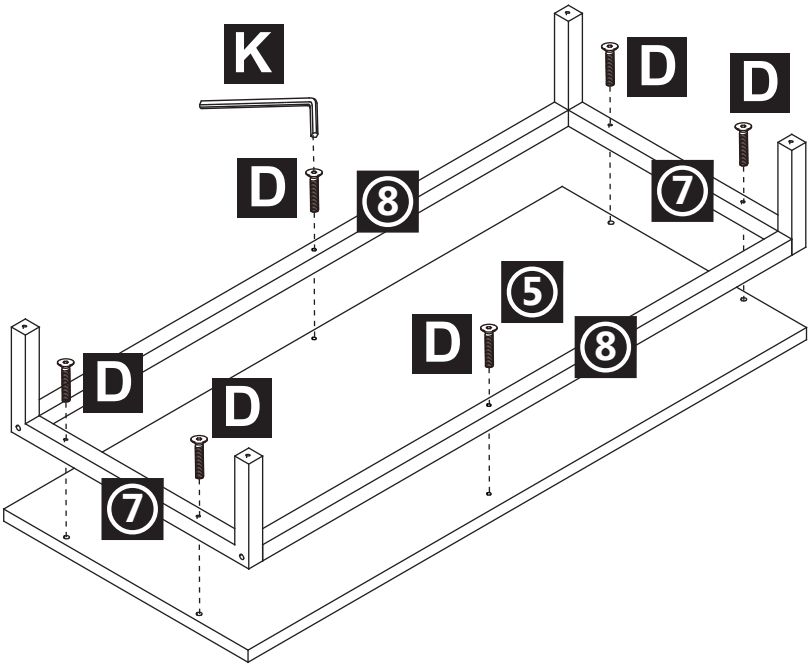

04

J x4

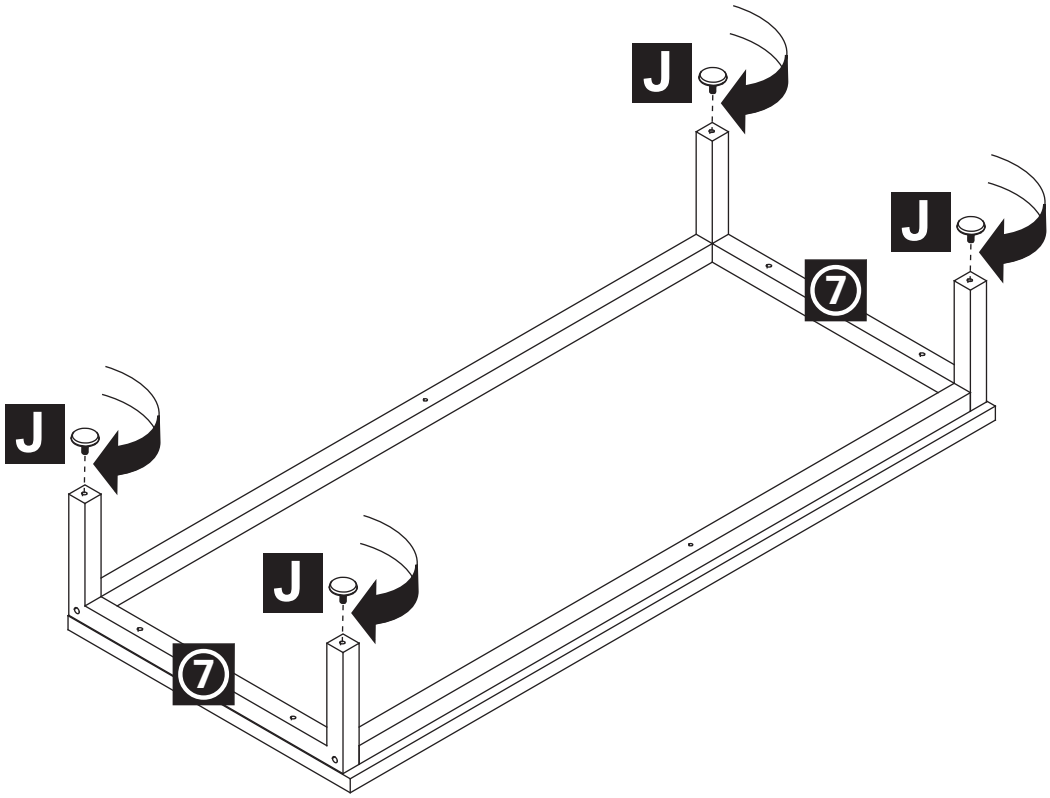

B x4

05

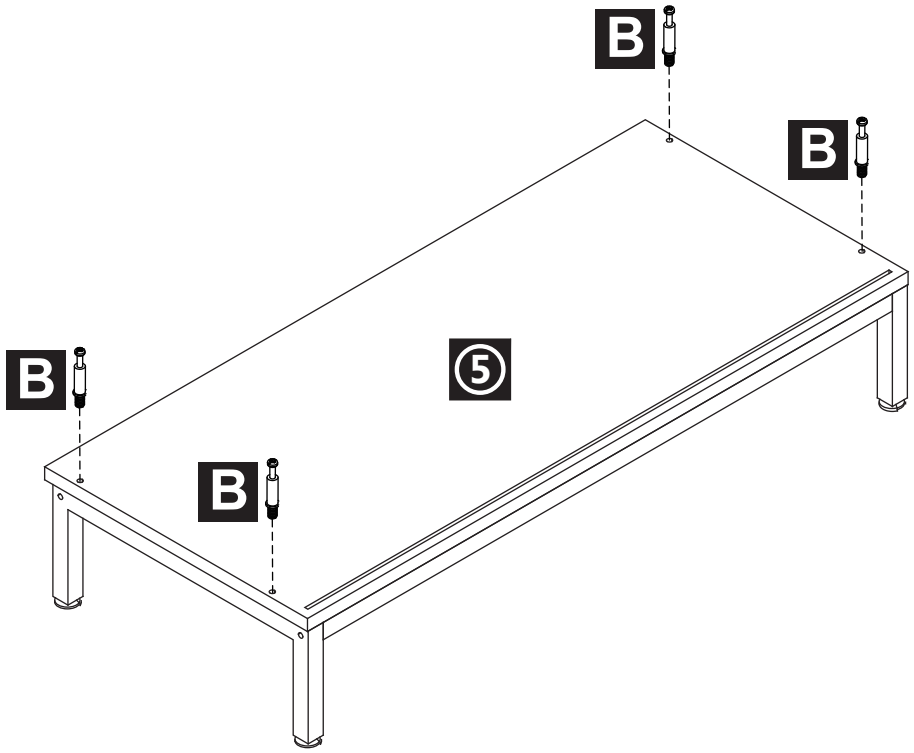

B x4

06

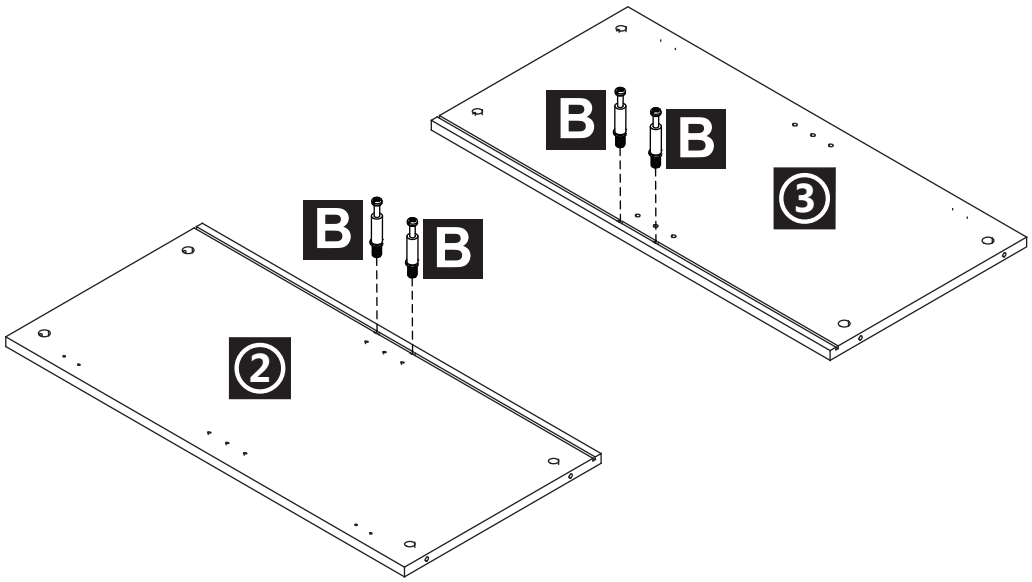

A x4

07

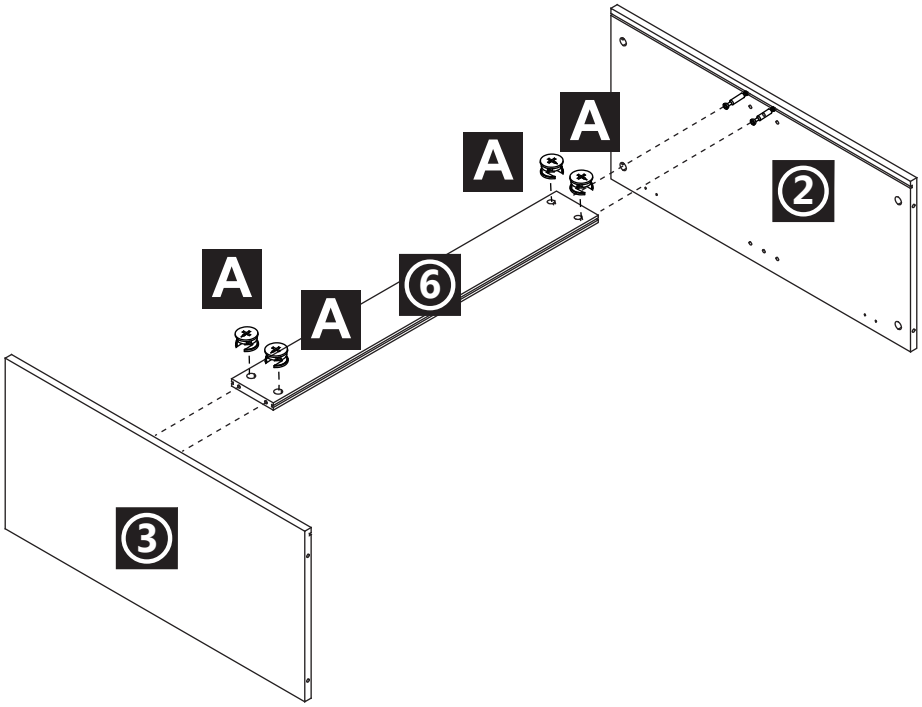

08

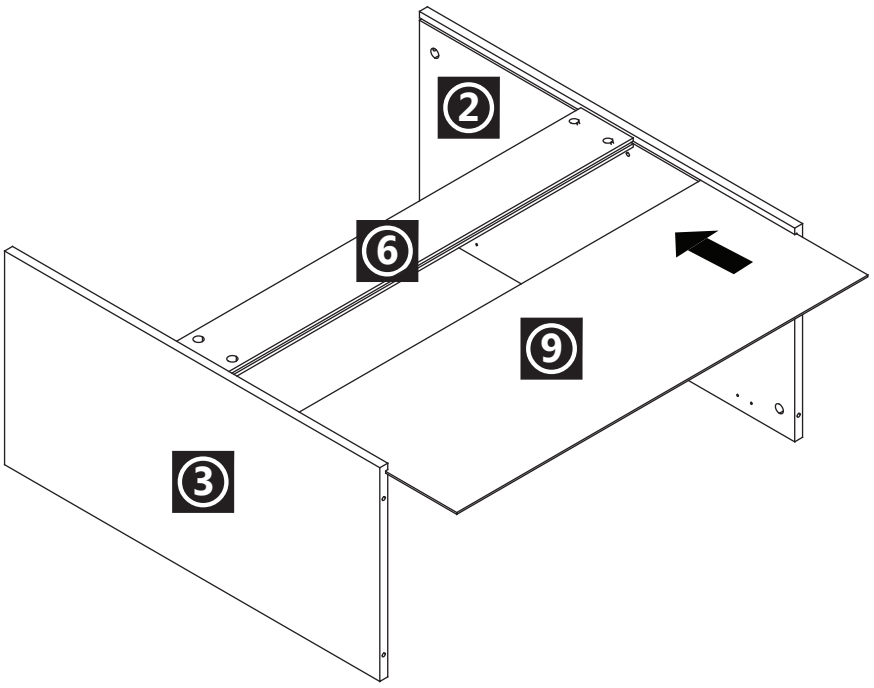

A x4

09

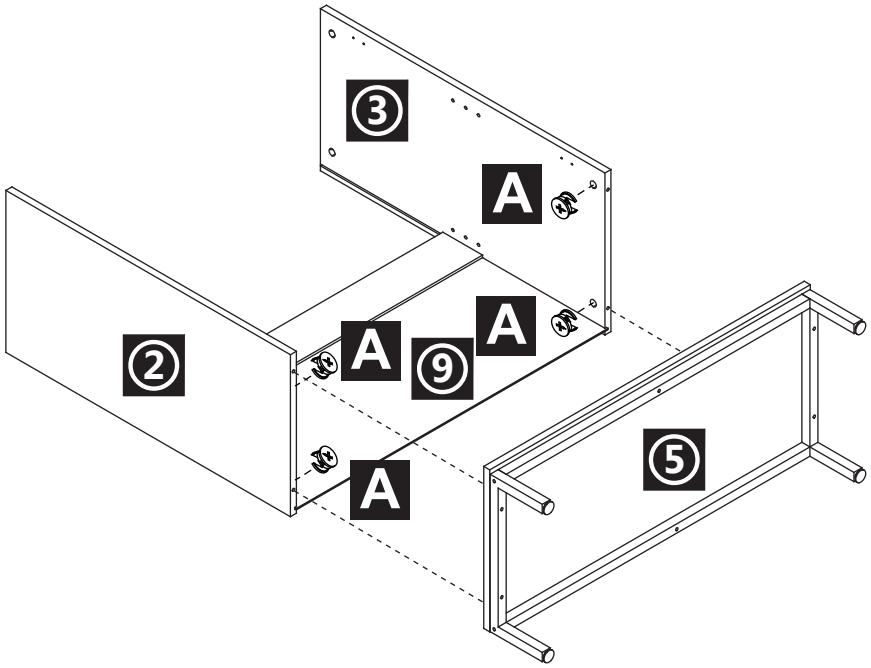

10

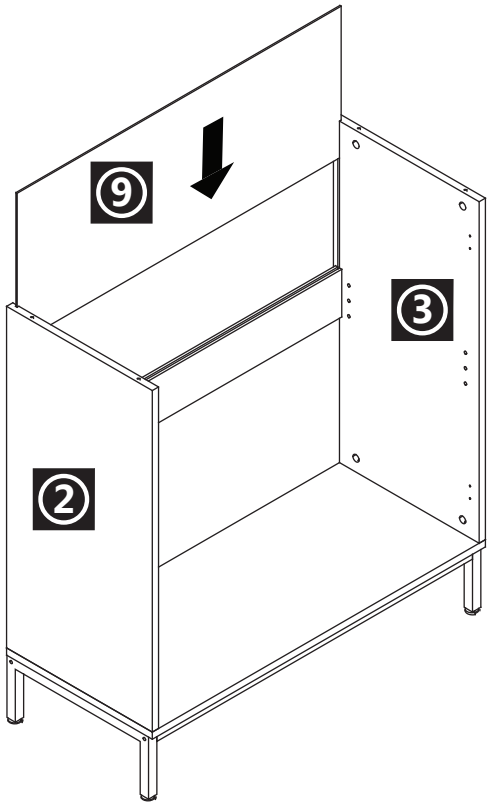

11

B x 4

H x 2

L x 4

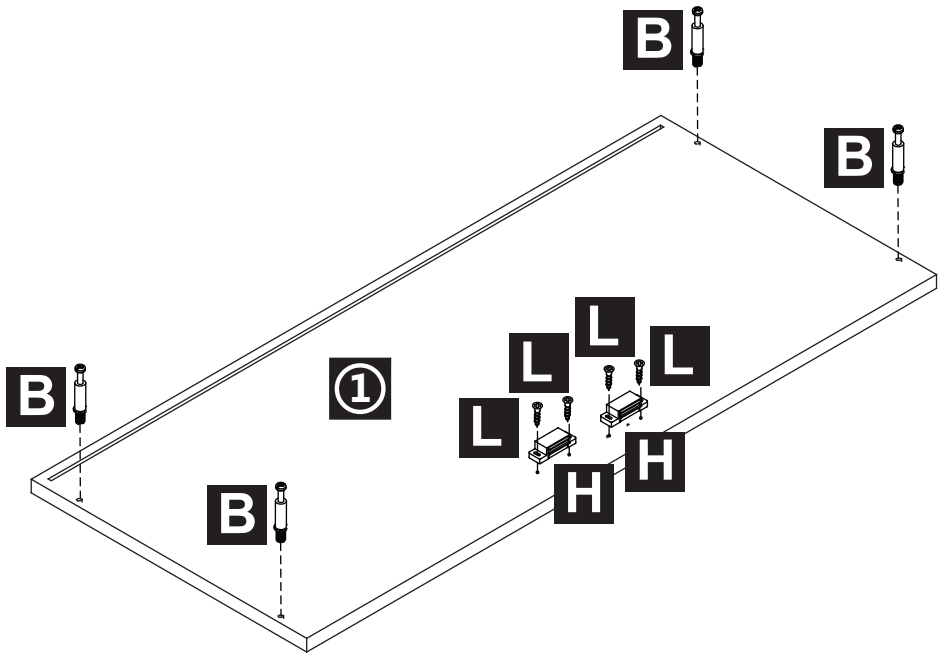

12

A x 4

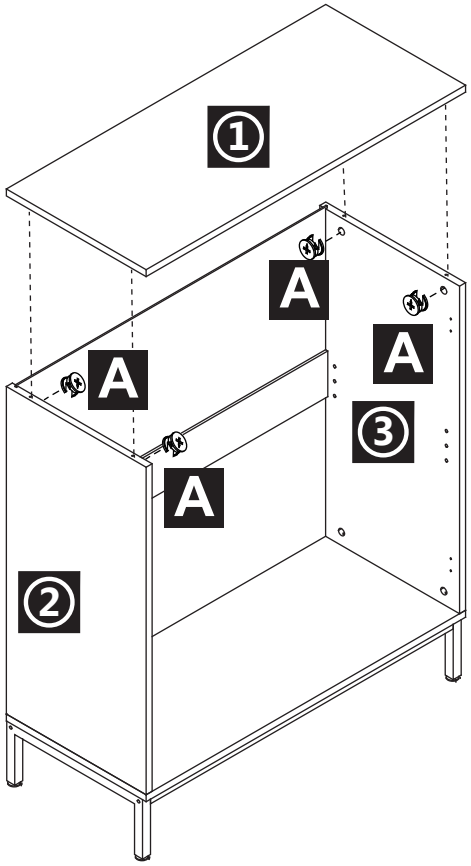

13

F x 4

G x12

L x 4

I x2

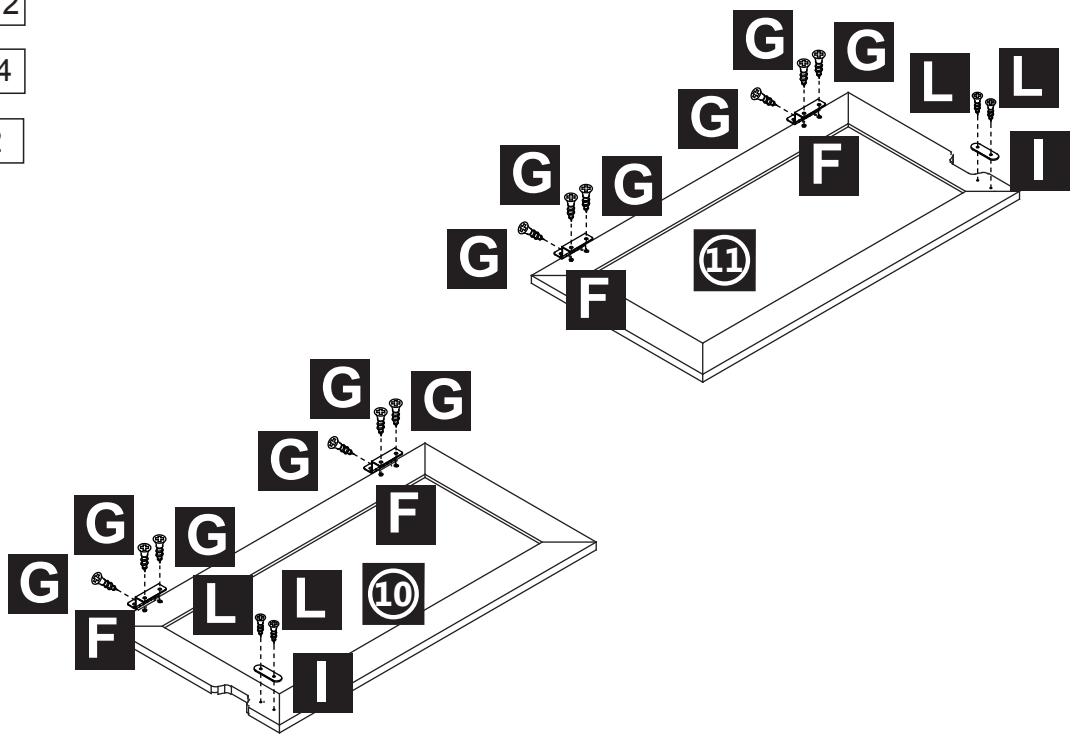

14

G x 8

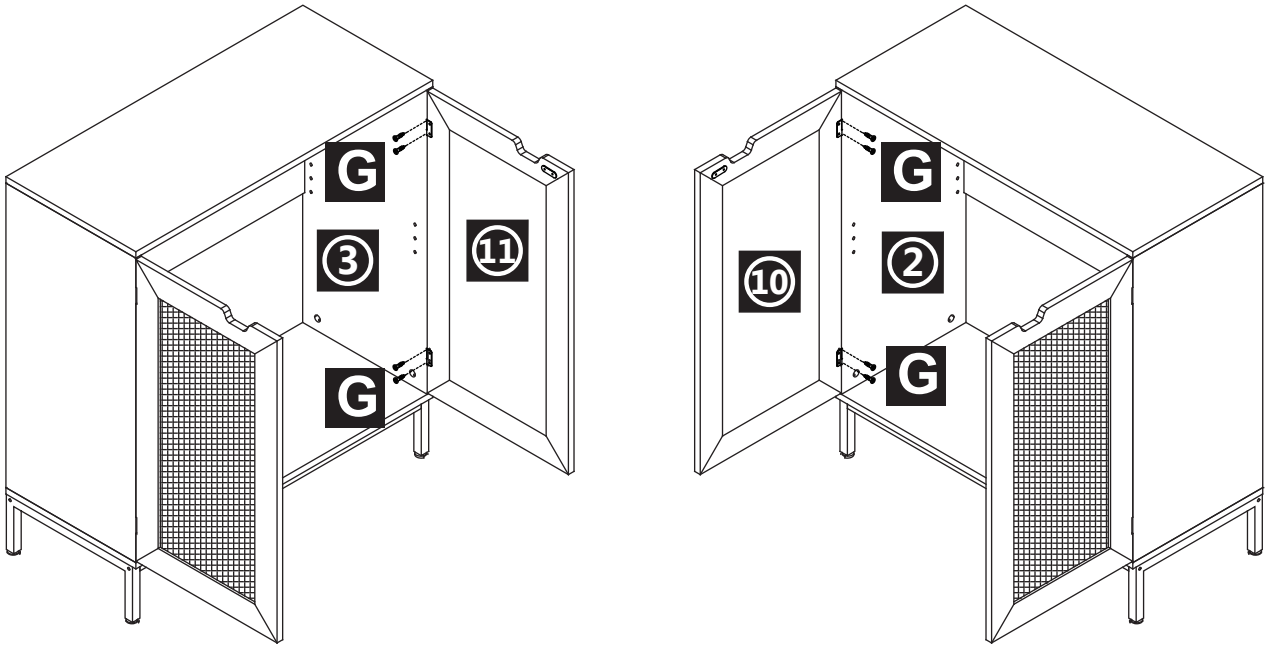

C x 4

15

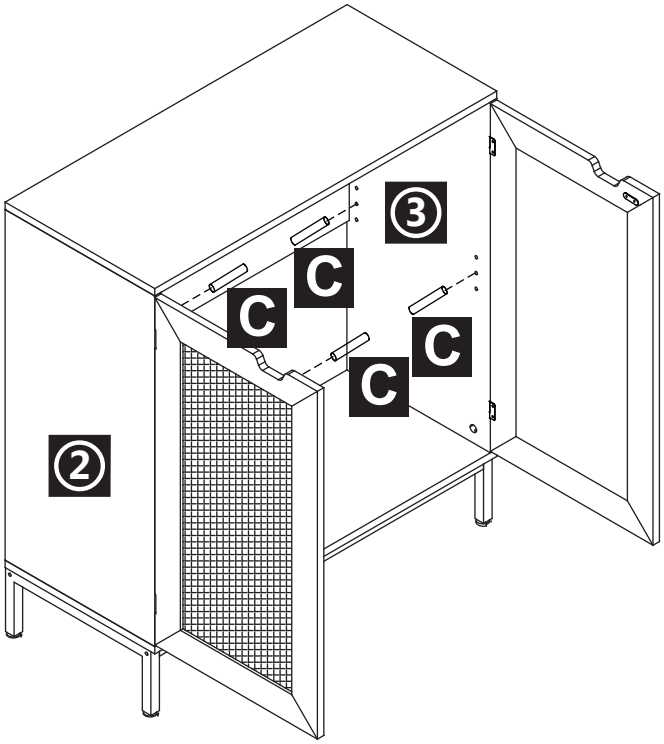

16

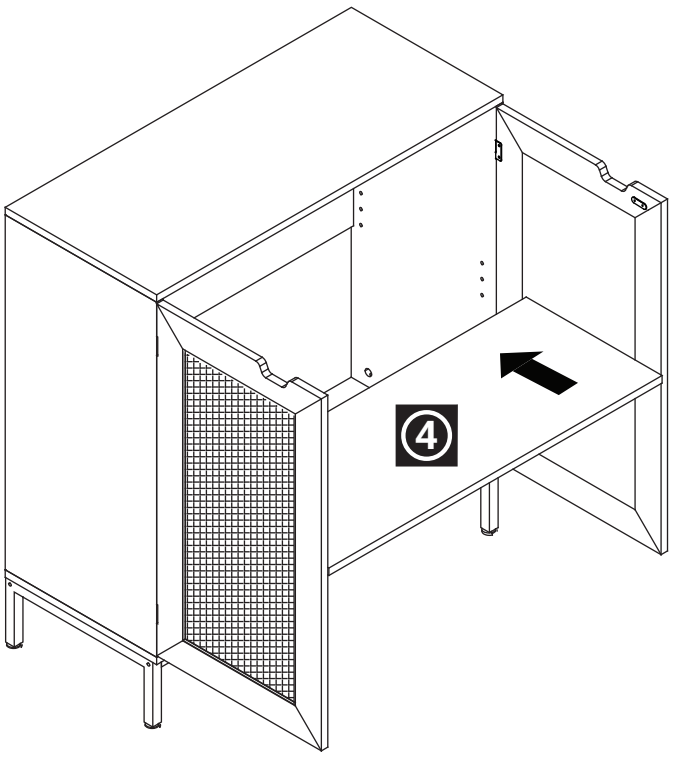

M x 8

17

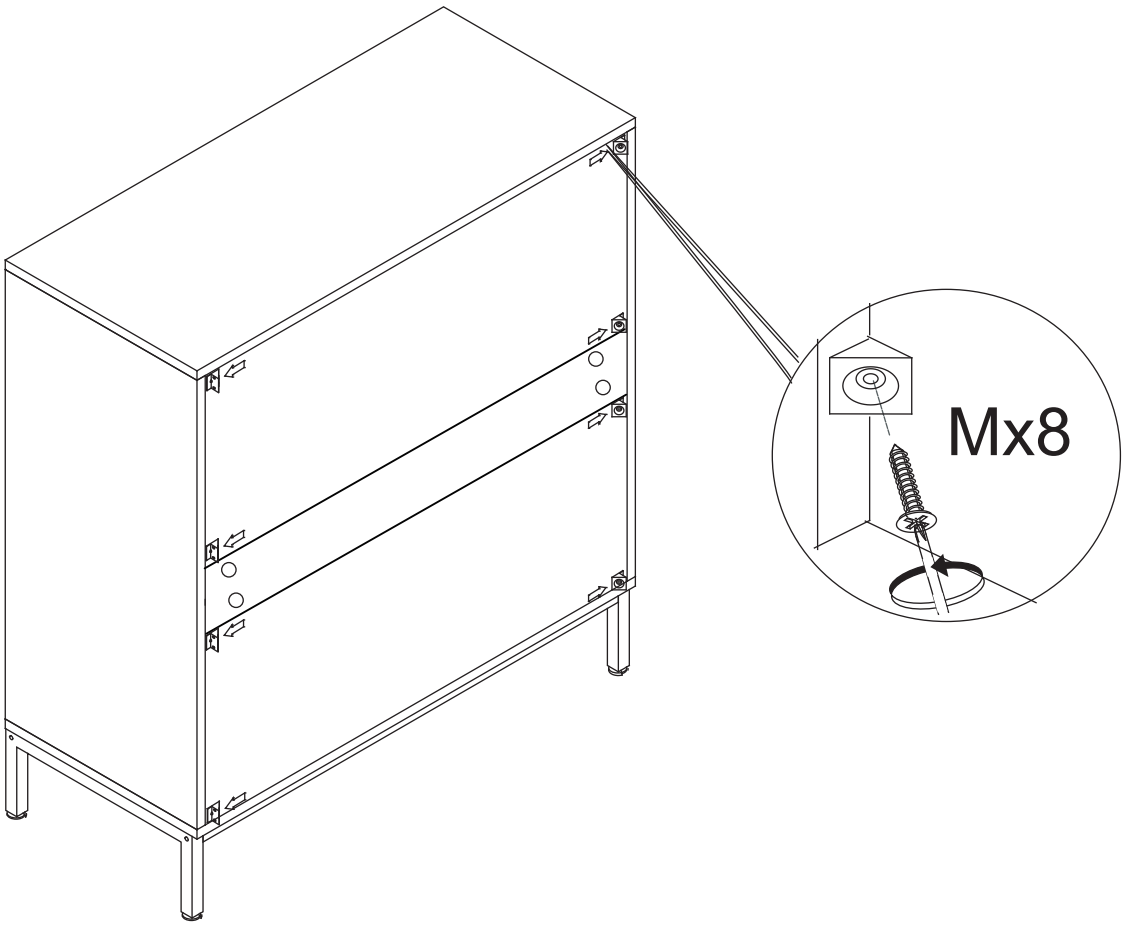

N x 1

Done

