wayfair

ASSEMBLY INSTRUCTION

CHAIR

Note: Do not use power tools for assembly. Power tools increase the risk of over tightening which leads to splitting or cracking the wood.

NO.	DRAWING	DESCRIPTION	QTY
A		Seat Frame	1 PC
B		Seat Cushion	1 PC
C		Back Cushion	1 PC

Remove the plastic straps from base before assembly.

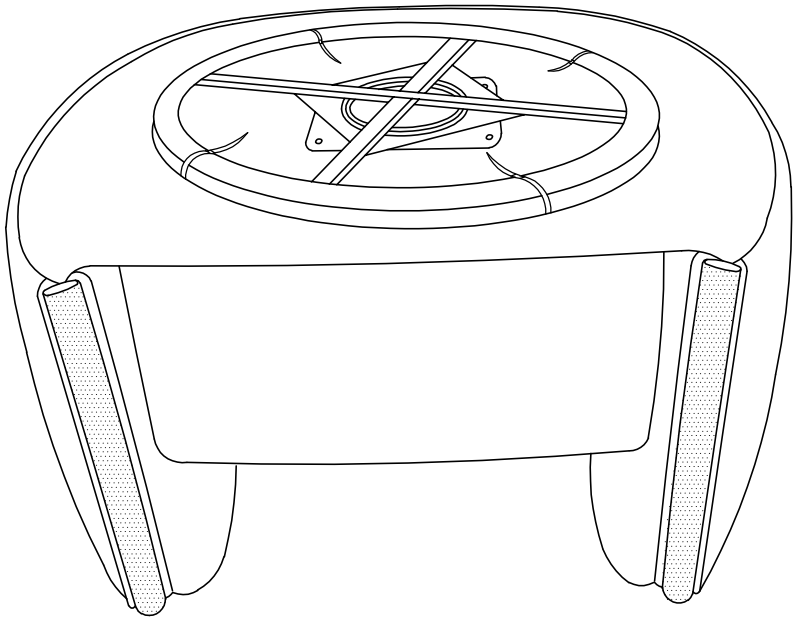

ASSEMBLY INSTRUCTION

CHAIR

STEP 1:

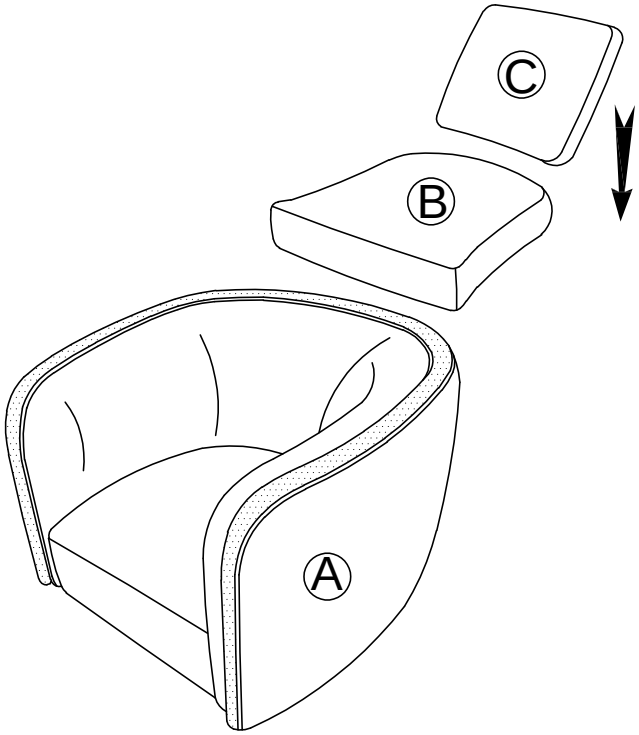

STEP 2: COMPLETED

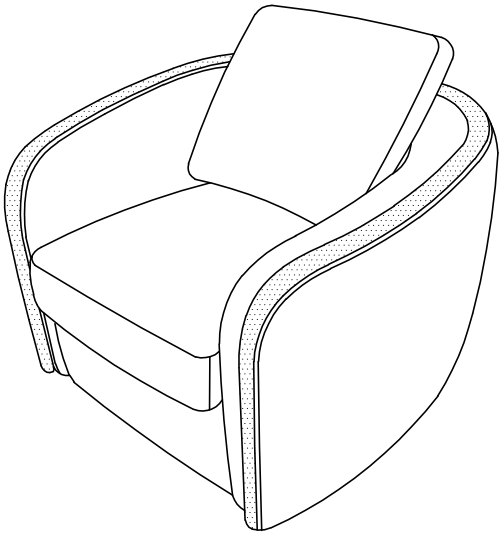

Care Instruction for Chenille Furniture:

In order to maintain the original appearance of your Chenille Furniture, please follow below simple care procedures:

• Avoid exposing furniture directly to sunlight or heating and air conditioning outlets. Sunlight and/or exposure to heating and air conditioning outlets will fade/damage Chenille.

• Vacuum or wipe with a soft cloth to remove dust.

• Hardware may loosen over time. Periodically check to make sure all connections are tight, Re-tighten if necessary.

For items use on wooden floor, hard surfaces or carpets, it is recommended to install protective pads under all legs and supports to avoid/prevent from damages/scratches and discoloration.