Instruction manual

Matius 1 Drawer Bedside Table, Seasoned Oak and Black

www.laura-james.co.uk

1700191.11

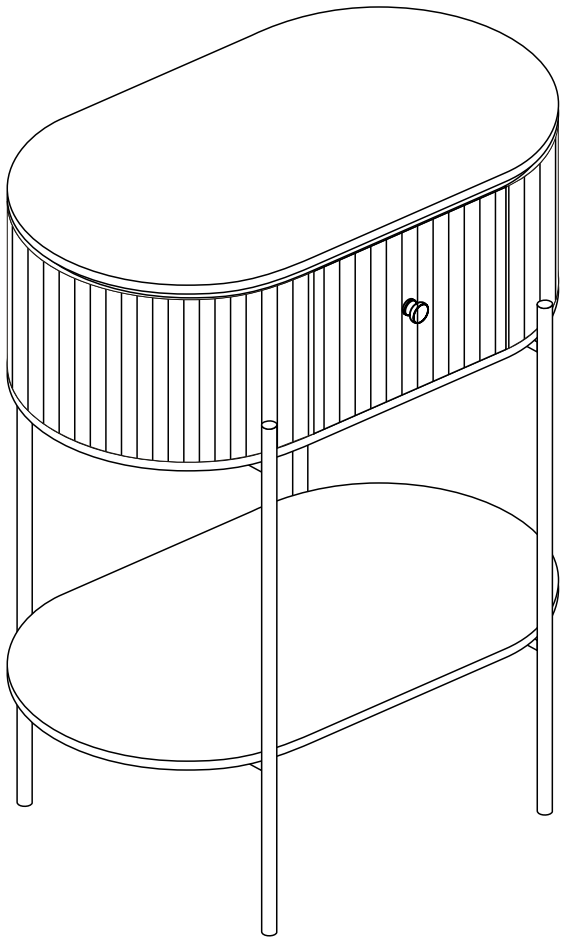

CONTENTS

Safety and care advice 1

Components 2

Assembly instructions 4

Copyright 7

⚠ SAFETY AND CARE ADVICE ⚠

PLEASE READ THESE INSTRUCTIONS CAREFULLY AND KEEP FOR FUTURE REFERENCE

- **Warning:** Please lift with care.
- Check you have all the components and tools listed on pages 2 and 3.
- Remove all fittings from the plastic bags and separate them into their groups.
- Keep children and animals away from the work area, small parts could choke if swallowed.
- Make sure you have enough space to lay out the parts before starting.
- Do not stand or put weight on the product, this could cause damage.
- Assemble the item as close to its final position (in the same room) as possible.
- Assemble on a soft level surface to avoid damaging the unit or your floor (use opened out unit carton).



- We do not recommend the use of power drill/drivers ***for inserting screws***, as this could damage the unit. Only use hand screwdrivers.
- Dispose of all packaging carefully and responsibly.

CARE AND MAINTENANCE

- Only clean using a damp cloth and mild detergent, do not use bleach or abrasive cleaners.
- From time to time check that there are no loose screws on this unit.
- This product should not be discarded with household waste. Take to your local authority waste disposal center.

Note *If required the next page can be cut out and used as reference throughout the assembly. Keep this page with these instructions for future reference.*

COMPONENTS

Ensure the following components are in the box before proceeding with assembly:

2 PERSON
ASSEMBLY
RECOMMENDED

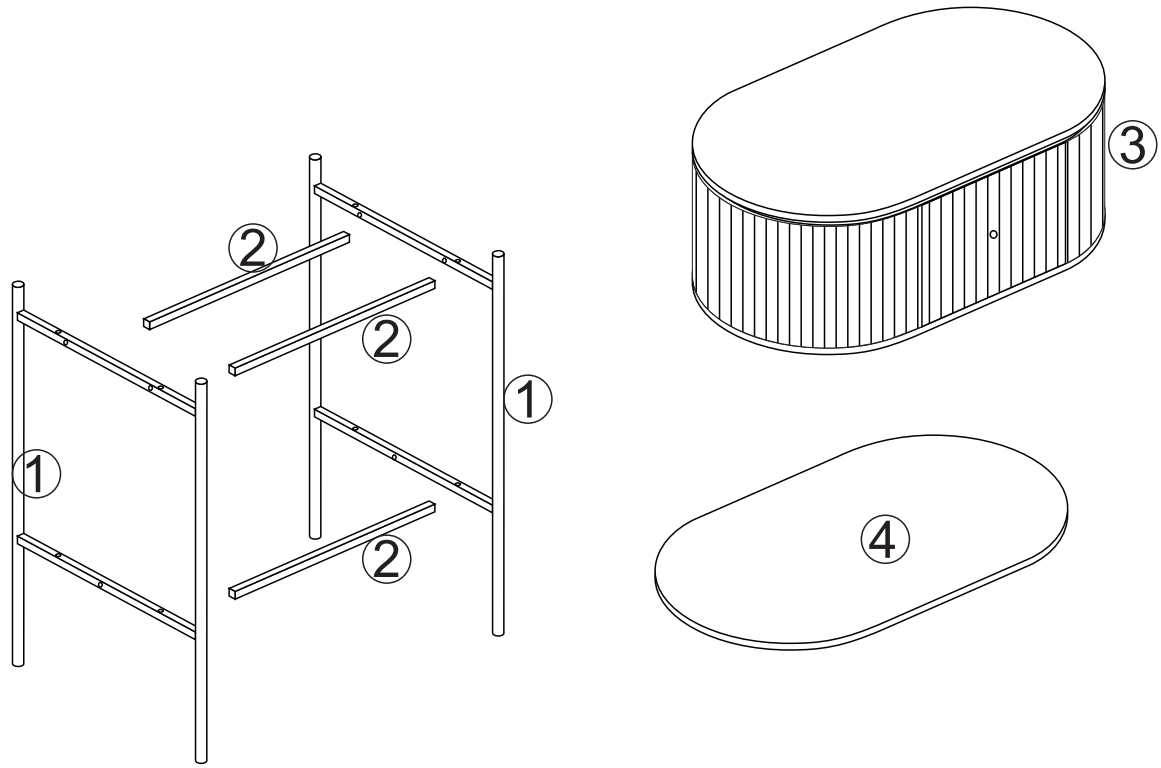

PANEL LIST

1	Leg	x2
2	Tube	x3
3	Cabinet Body	x1
4	Shelf Panel	x1

COMPONENTS — FITTINGS

Please check you have all the fittings listed below:

A 

Screw M4*40mm x1

B 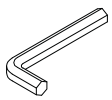

Alley M6 x1

C 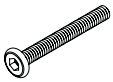

Screw M6*25mm x14

D 

Handle Φ30*23mm x1

ASSEMBLY INSTRUCTIONS

Step 1

C		x6
B		x1

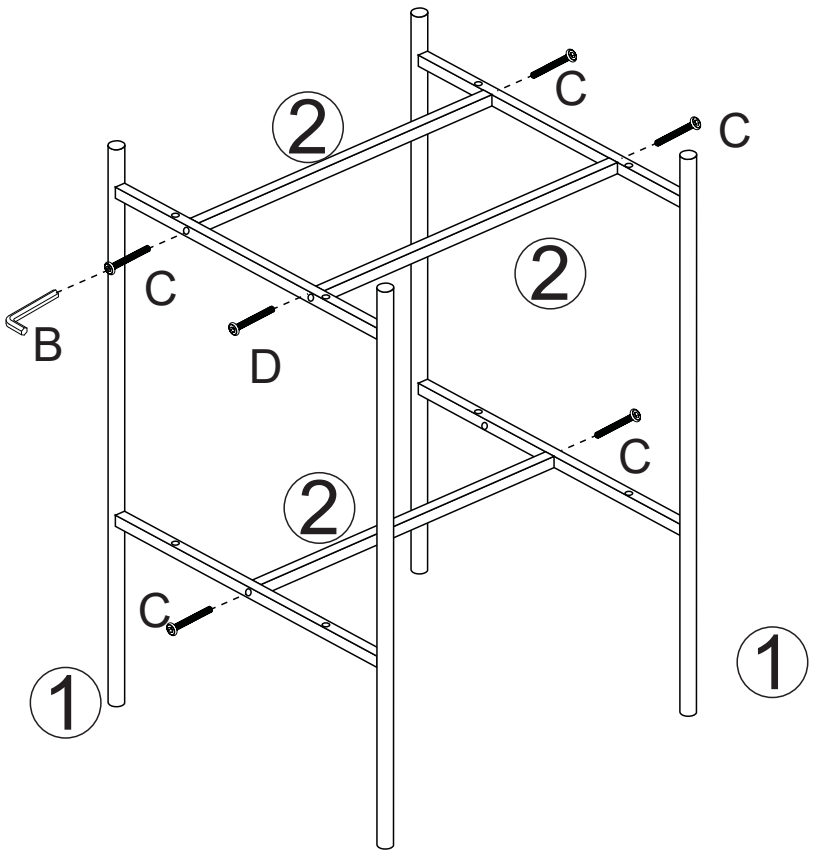

ASSEMBLY INSTRUCTIONS

Step 2

C		x8
B		x1

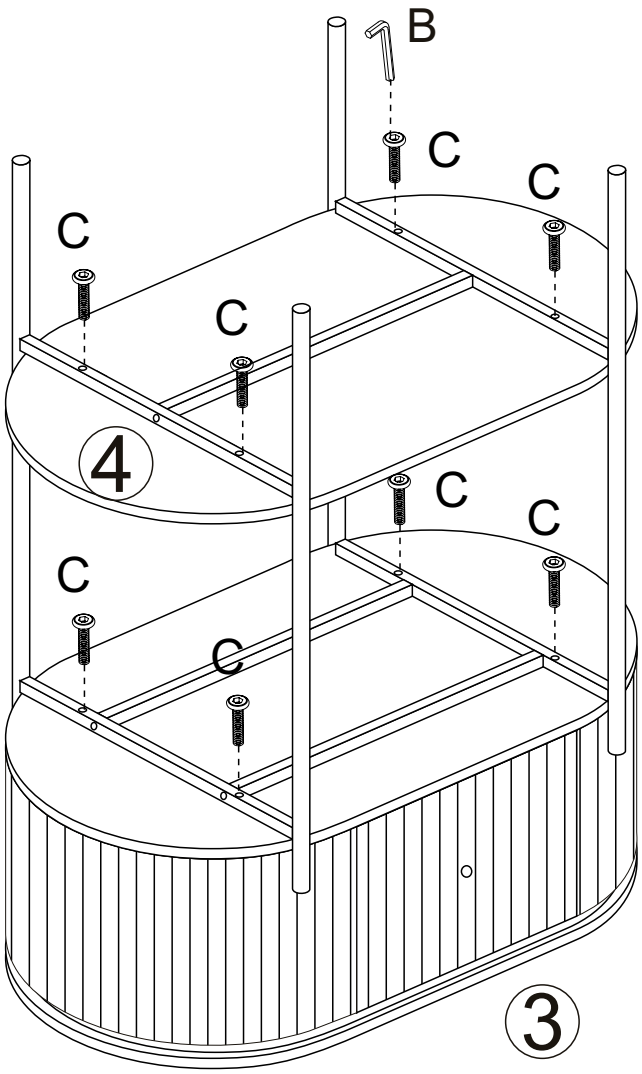

ASSEMBLY INSTRUCTIONS

Step 3

A		x1
D		x1

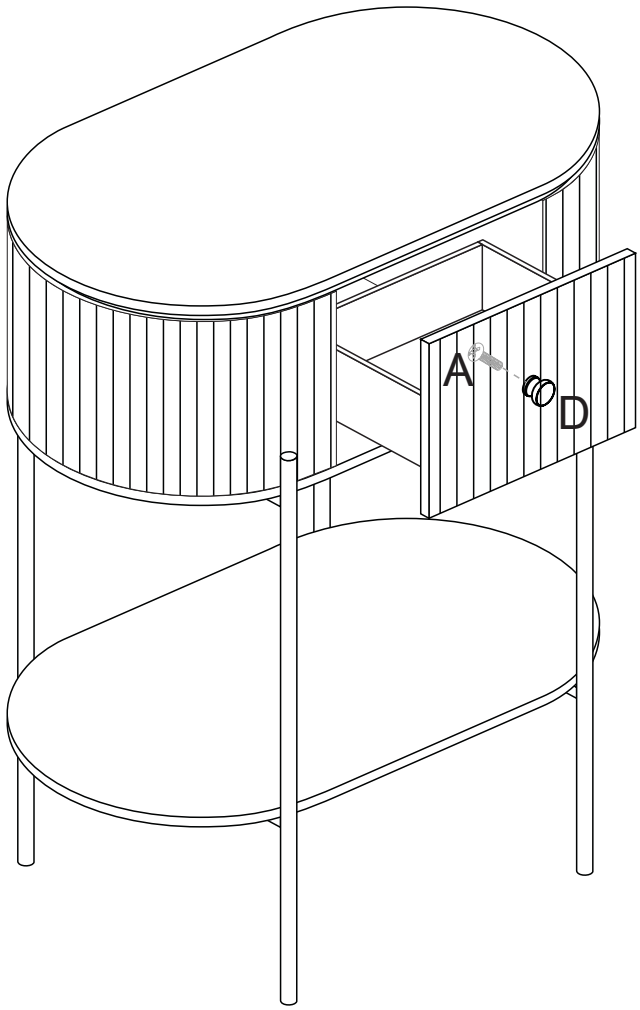

IF YOU FIND A DEFECTIVE PART

We fully stock all parts and components. Any defective part can be quickly replaced. Take note of the defective part number in manual and we will arrange a replacement.

You can email our team at *customercare@laura-james.co.uk*

COPYRIGHT

All material in this instruction manual is copyrighted by AGTC Ltd.

Any unauthorised use may violate worldwide copyright, trademark and other laws.

Thank you for purchasing!

Laura James® is a registered trademark of AGTC Ltd.
Made in China for AGTC LTD S35 9ZX