MANHATTAN COMFORT

DC2077 DC2294

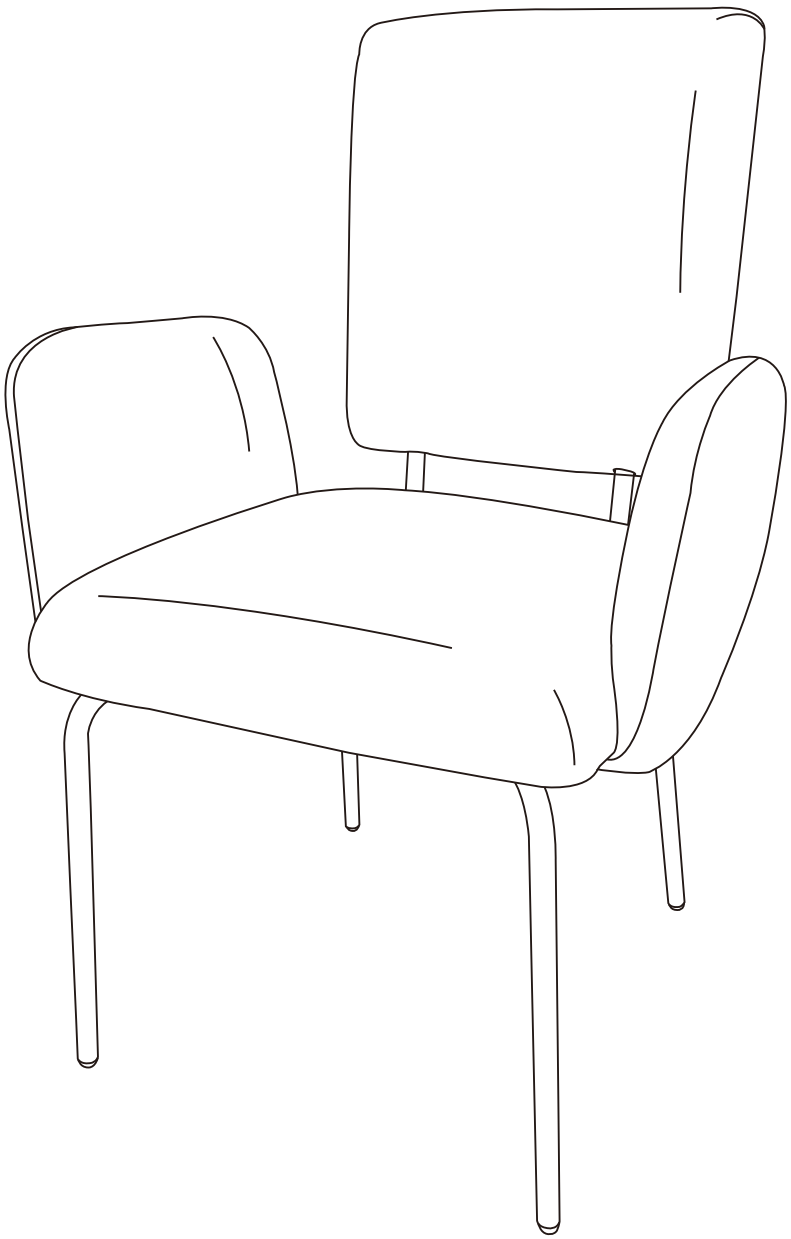

V.10102026



STOP!

Before beginning the assembly process,
ensure all boxes and parts have been delivered.

FOR BEST RESULTS:

- Do not throw away packaging materials until assembly is complete.
- Assemble item on a soft surface, such as cardboard or carpet, to protect finish.
- Proper assembly requires two people.

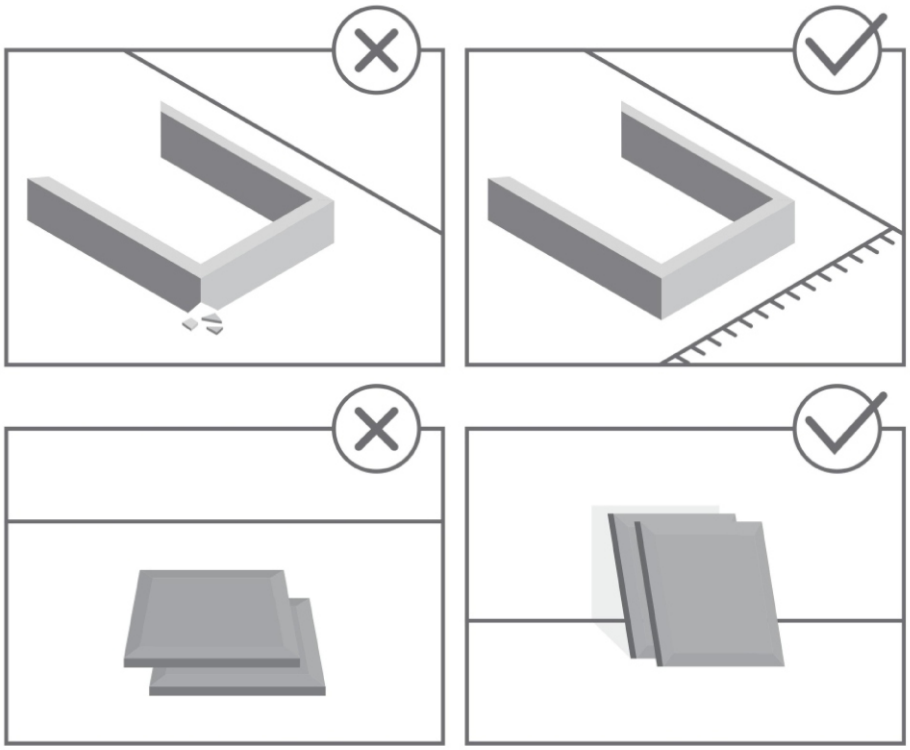

TOOLS REQUIRED

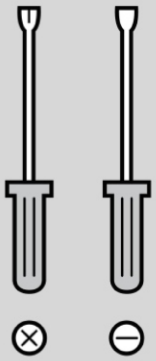

View our assembly video online:
WWW.MANHATTANCOMFORT.COM

Stuck? Question? We are here to help.
tel: 908-888-0818
e-mail: help@manhattancomfort.com

Support Site

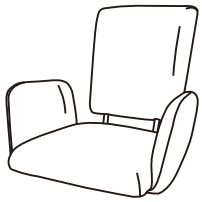 A x 1	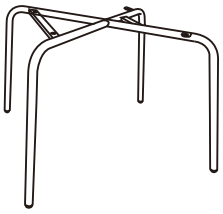 B x 1	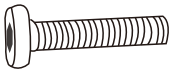 C x 2 (Longer for front)	 D x 2 (Shorter for back)	 E x 1

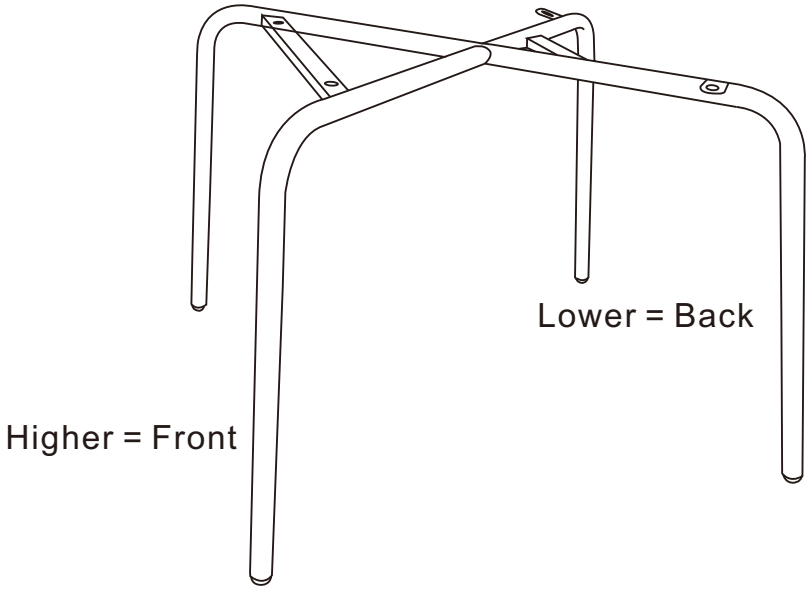

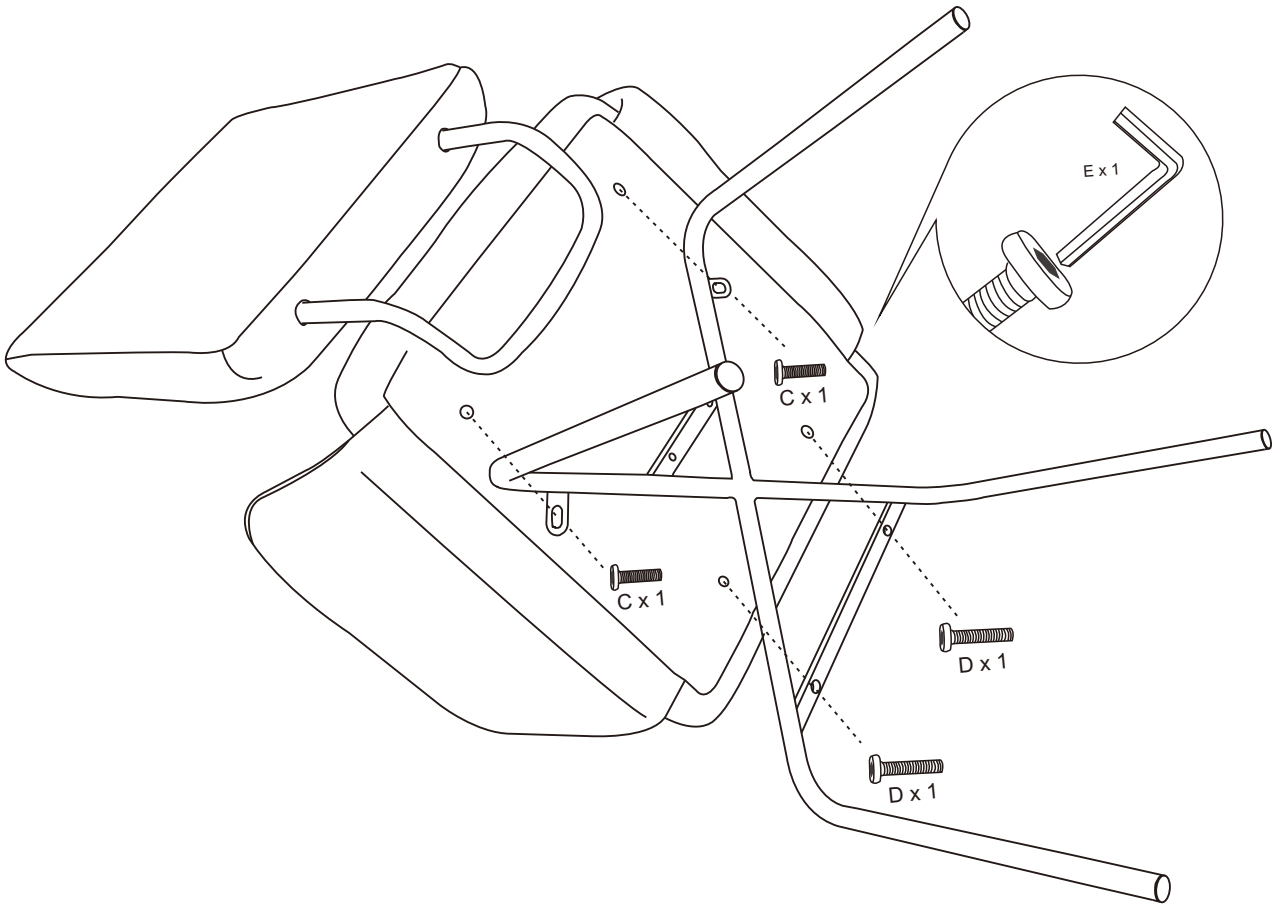

MANHATTAN COMFORT

WARRANTY POLICY

All Manhattan Comfort furniture products are warranted, to the original purchaser at the time of purchase and for a period of 30 days thereafter.

Our warranty is limited to new products purchased in factory sealed cartons. This warranty is valid in the United States of America and Canada.

In order to provide you with timely assistance, please thoroughly inspect your furniture for missing or defective parts immediately after opening the carton.

Manhattan Comfort offers a 30-day parts replacement warranty on all items.

Our furniture products are not intended for outdoor use.

THE WARRANTY DOES NOT COVER:

-Defects/damages by improper assembly or disassembly.
-Defects/damages caused by inappropriate use of the furniture.

319 Ridge Rd. Dayton, NJ 08810
908-888-0818