A	 Ⓡ	1
B	 Ⓛ	1
C	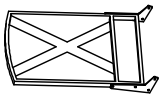	1
D		1
E		1
F	 M6*15	8
G	 M6*28	4
H	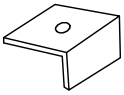	4
I		1
J	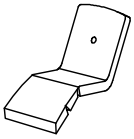	1

STEP 1

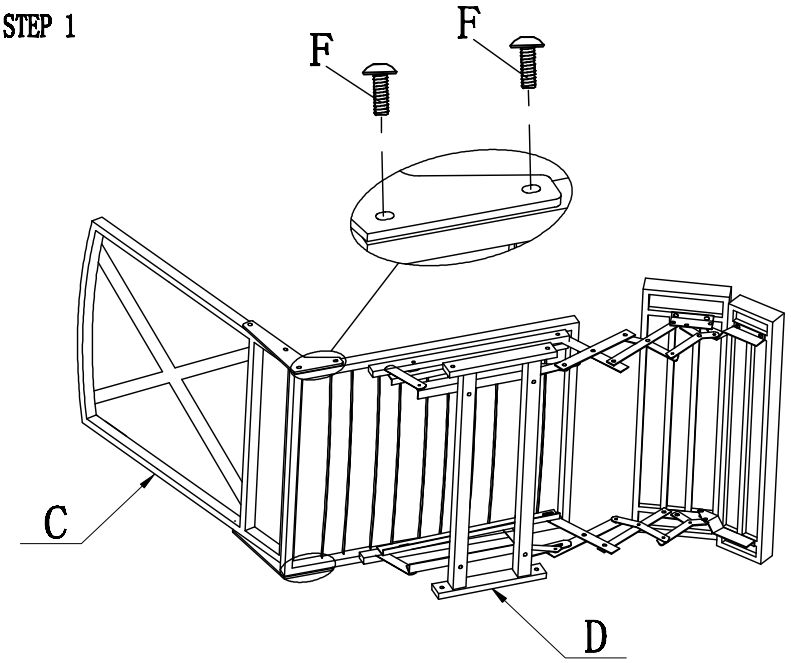

STEP 2

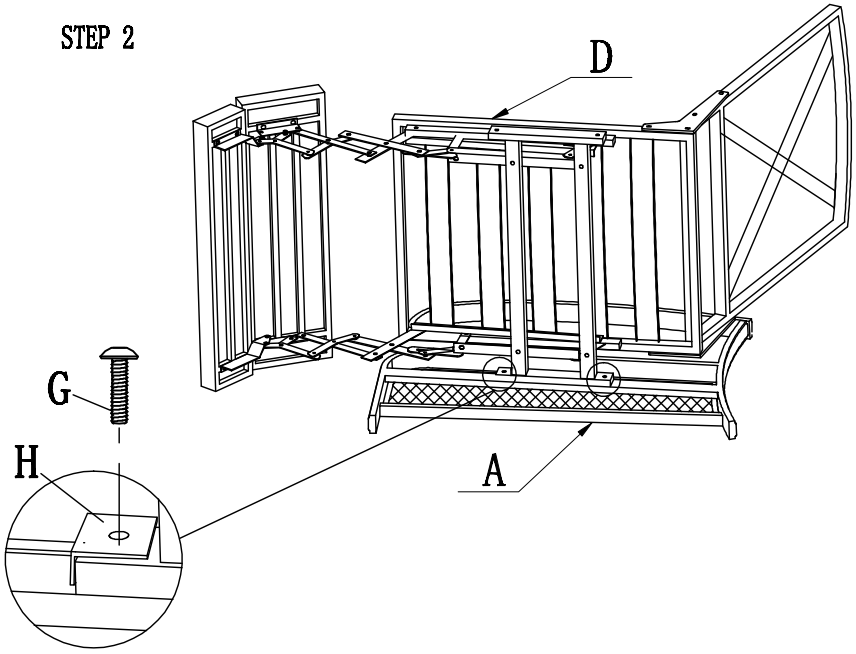

STEP 3

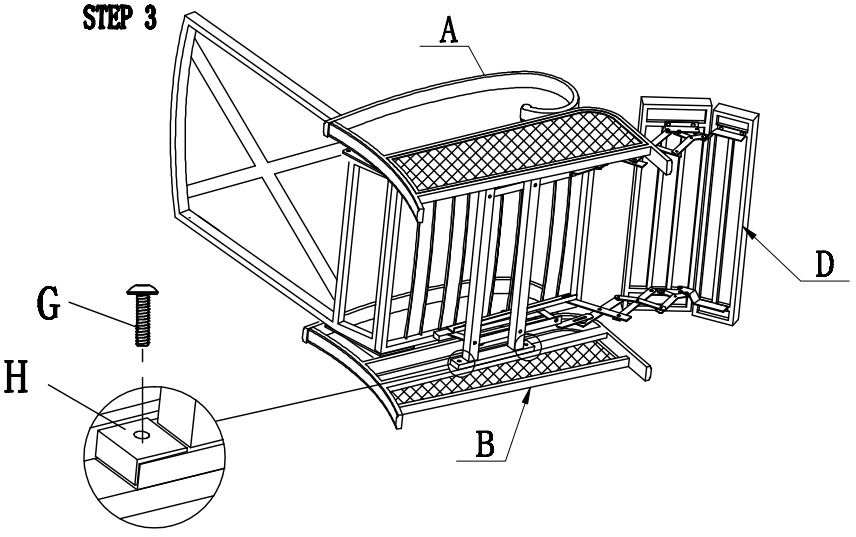

STEP 4

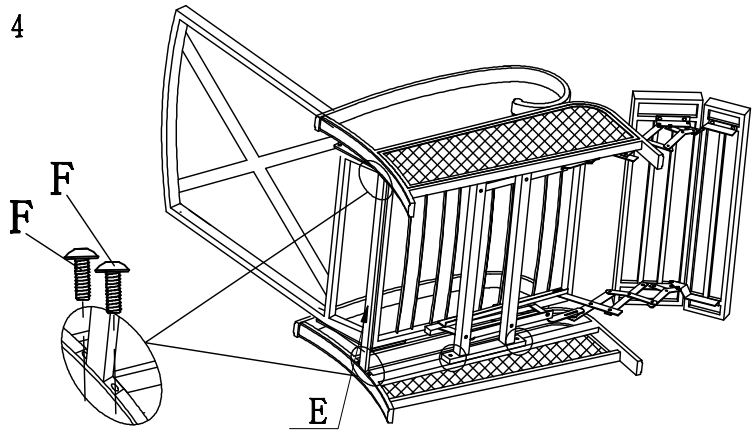

STEP 5

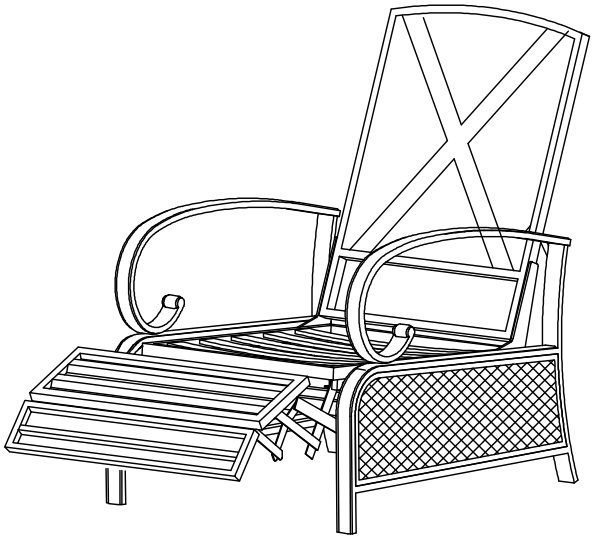

STEP 6

