NT.1400.02W.SS ROLLING DOOR HARDWARE

CSH

Installation manual

NT.1400.02W.SS

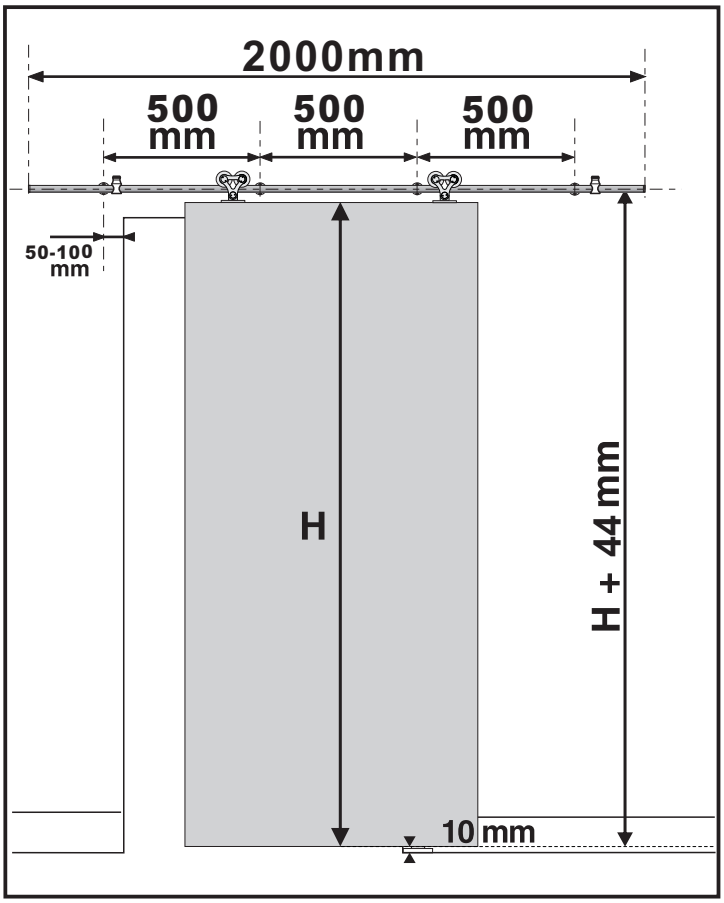

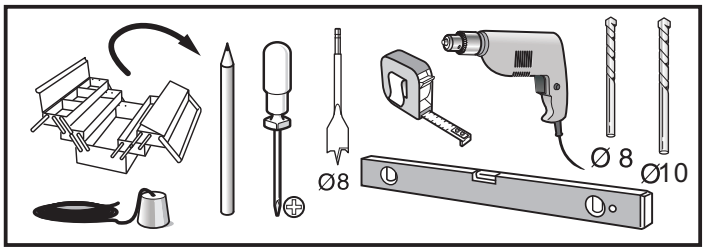

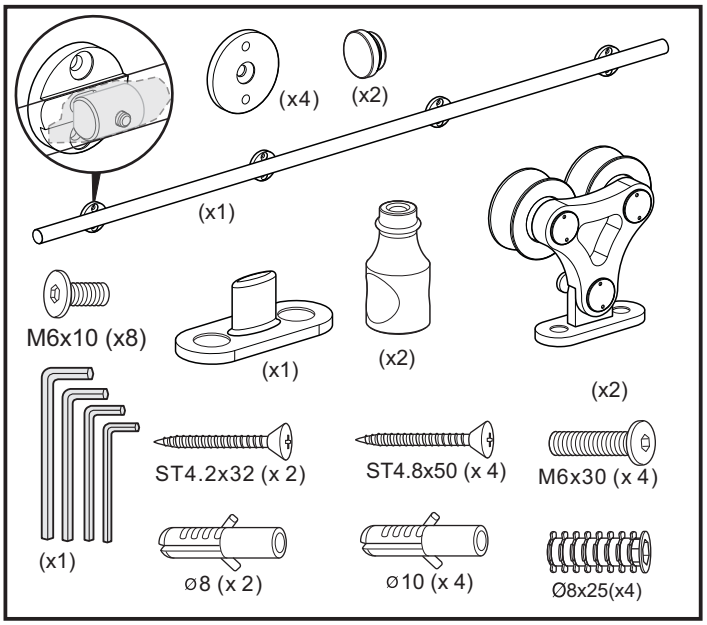

To obtain the maximum weight capacity, all fasteners must be mounted securely into solid wood of studs or blocking within the wall or wood mounted to the face of the wall.

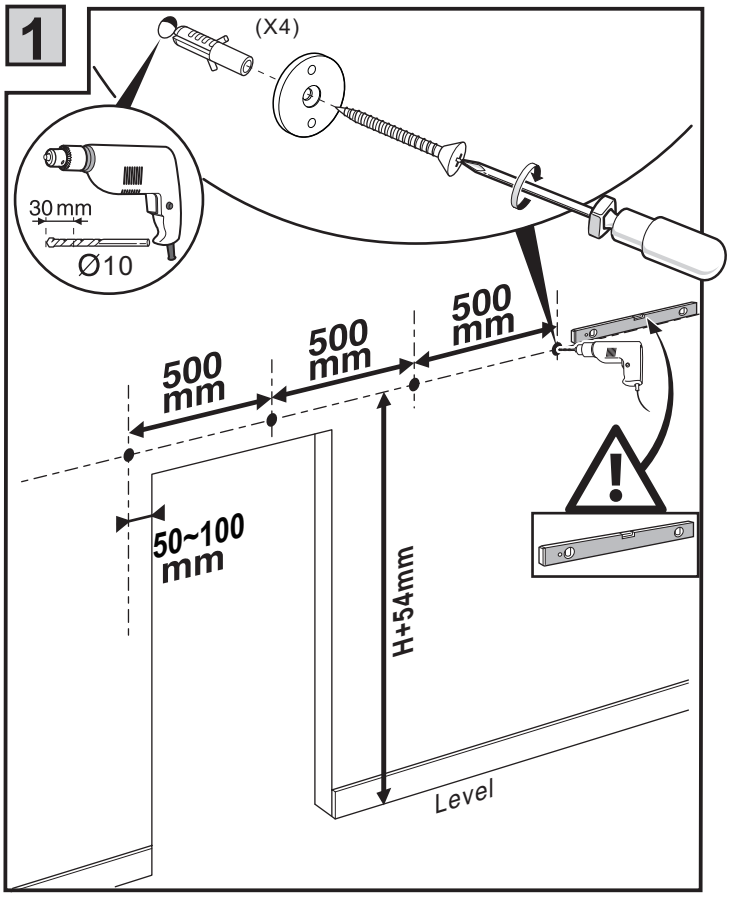

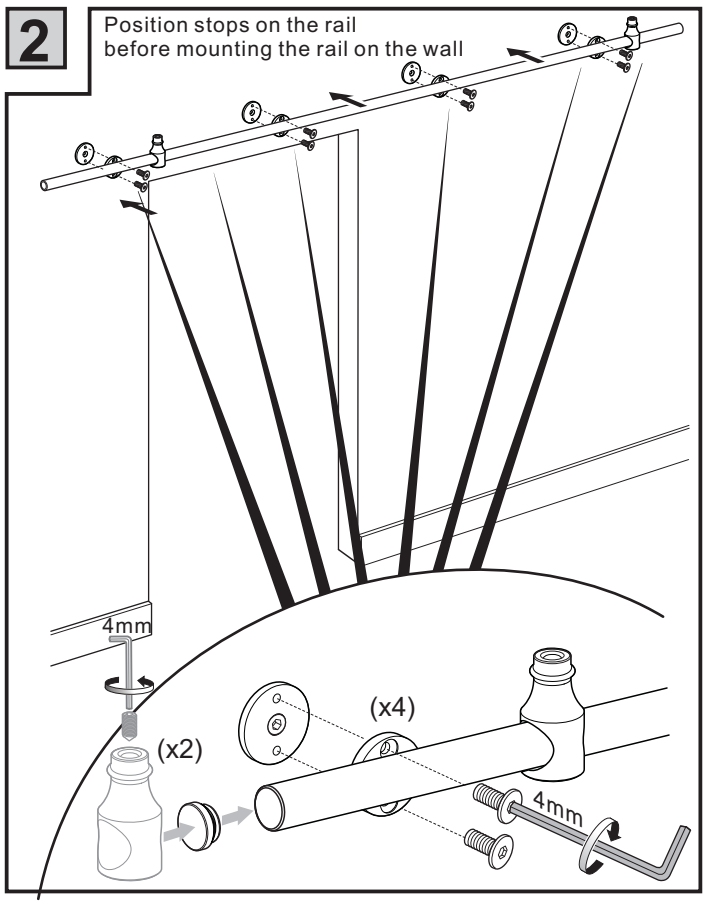

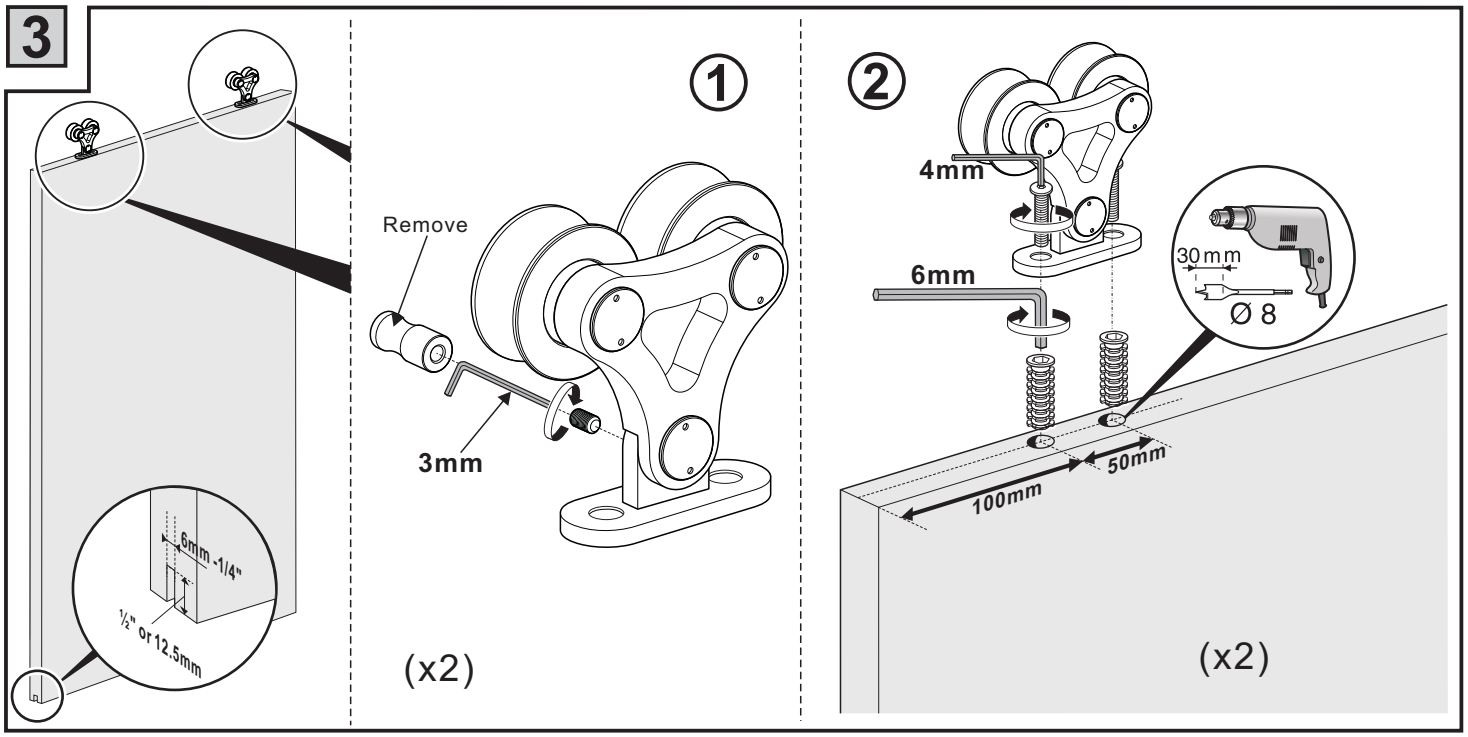
3
6mm -1/4"
½" or 12.5mm
①
Remove
3mm
(x2)
②
4mm
6mm
30mm
Ø 8
50mm
100mm
(x2)

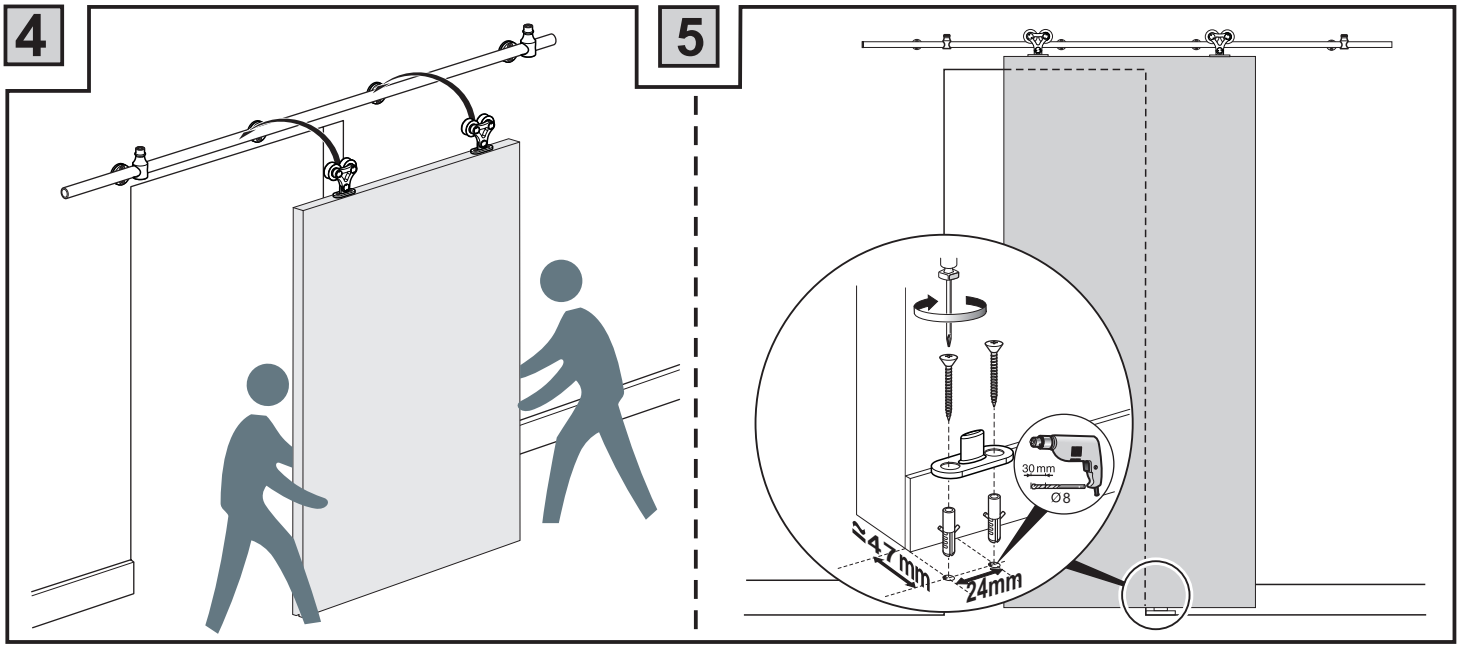
4
5
30mm
Ø8
≥47mm
24mm

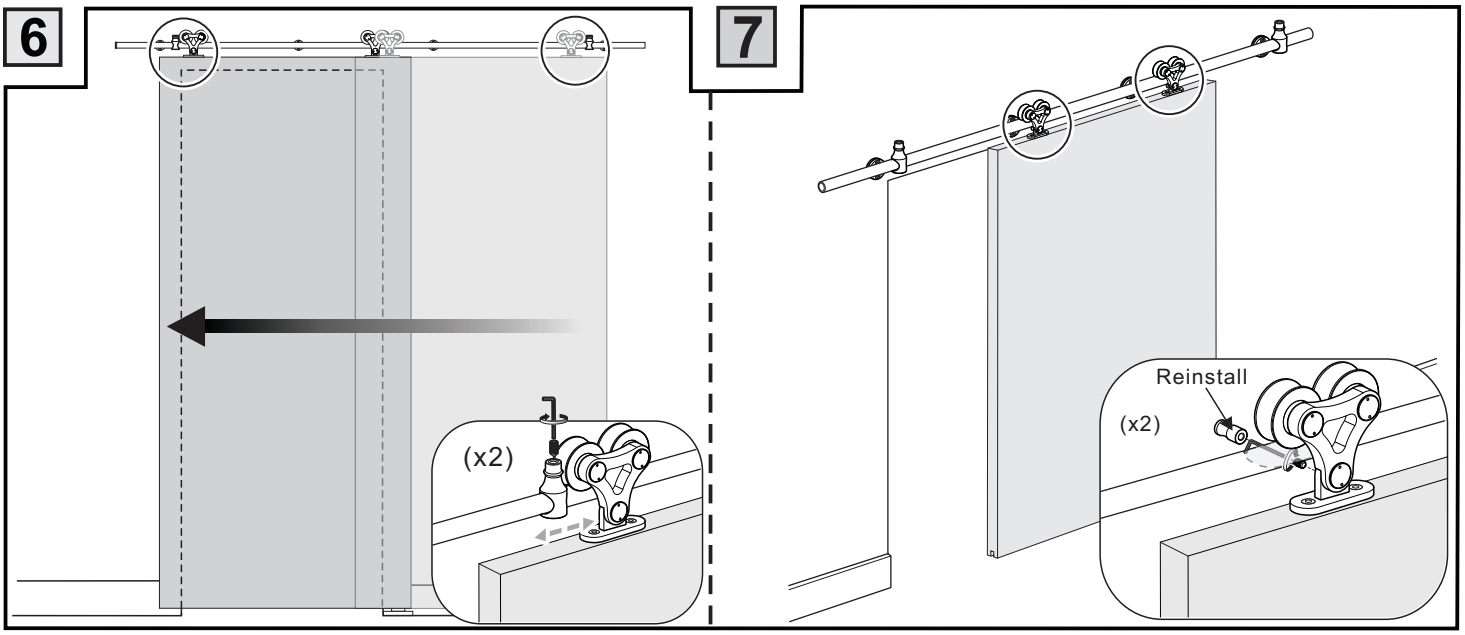
6
(x2)
7
Reinstall
(x2)