MOEN

Buy it for looks. Buy it for life.®

Specifications

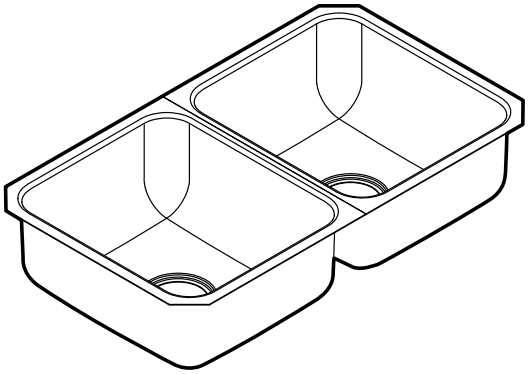

Model Number	Depth-Inches (left bowl, right bowl)	Drain Placement	Model Specified
G18242	10,8	Center	
G18211	8	Center	
G18212	9	Center	
G18210	7	Center	
G18215	5.5	Rear	

Rear Drain Configuration

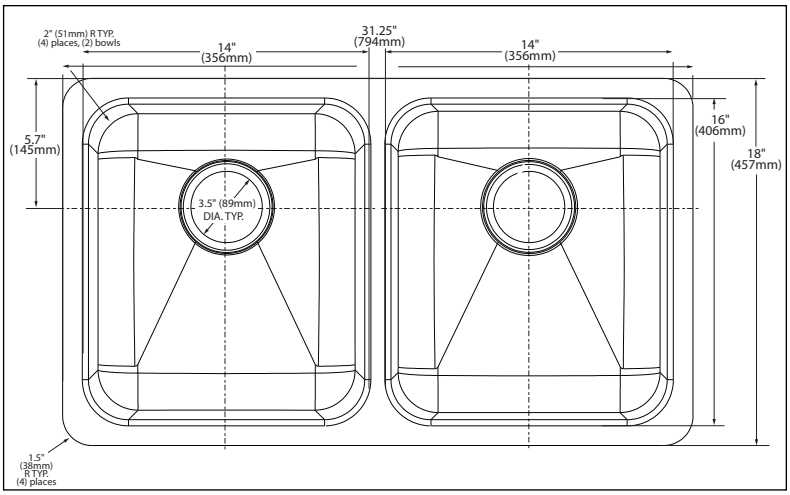

SINK DESCRIPTION

- 1800 Series double bowl undermount sink
- 18 gauge stainless steel, Brushed finish
- Center or rear drain location as noted
- Mounting brackets included, other standard mounting hardware and silicone sealant not included
- SoundSHIELD sound absorbing system

CUT OUT DIMENSIONS

- Template included - template number 22541

STANDARDS

- Third party certified by IAPMO to meet ASME A112.19.3 and all applicable specifications referenced therein
- G18215 Compatible with ADA installation requirements

WARRANTY

- Limited lifetime warranty against material or manufacturing defects to the original consumer purchaser

CRITICAL DIMENSIONS

(DO NOT SCALE)

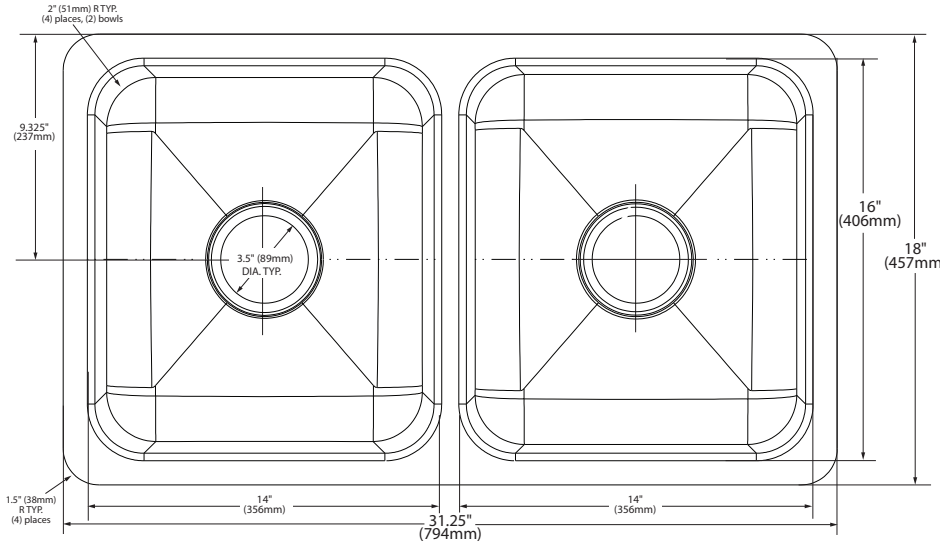

MADE IN THE USA

Installation Detail

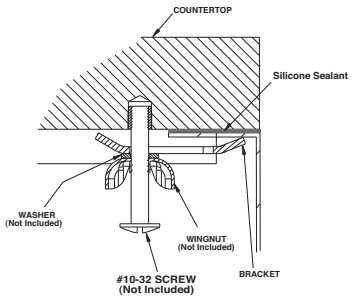

Rev. 2/15

FOR MORE INFORMATION CALL: 1-800-BUY-MOEN
www.moen.com

01/27/2015 SPC13388 500000187001
Released 02