Bathroom Cabinet	Unit	Inch	Model	CVH72
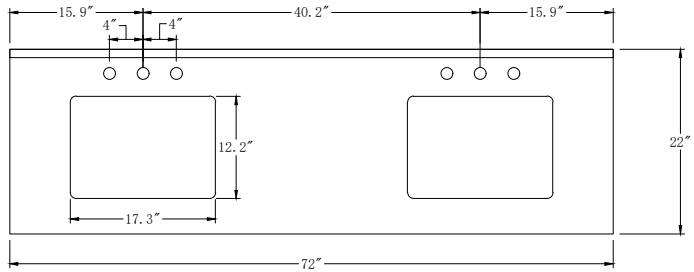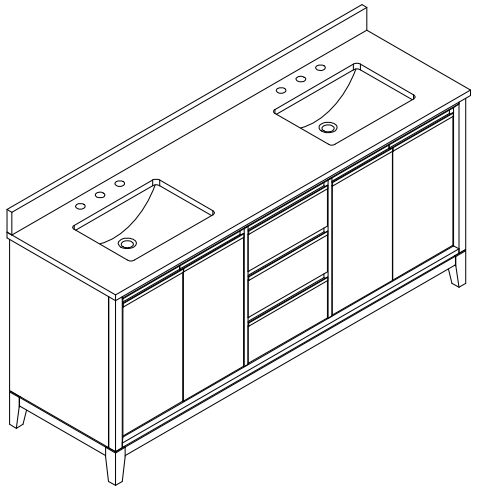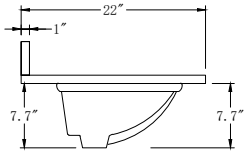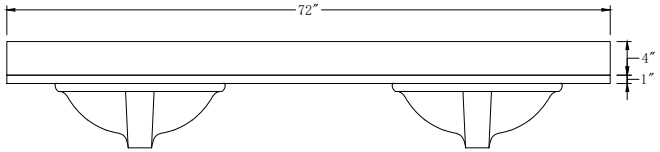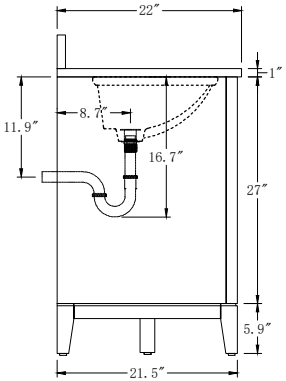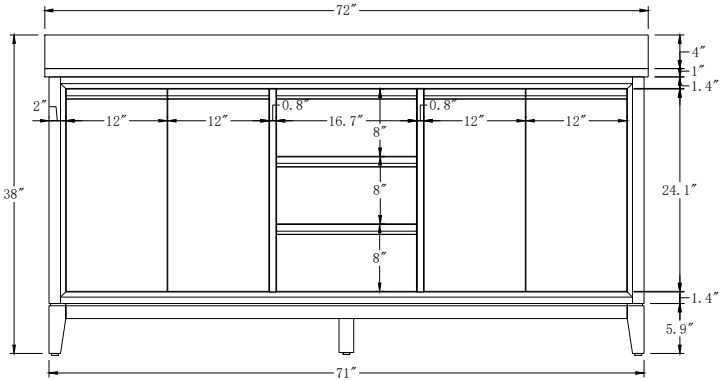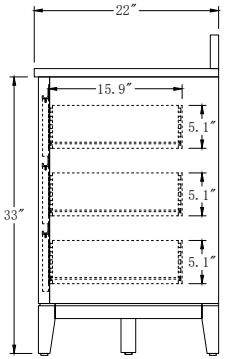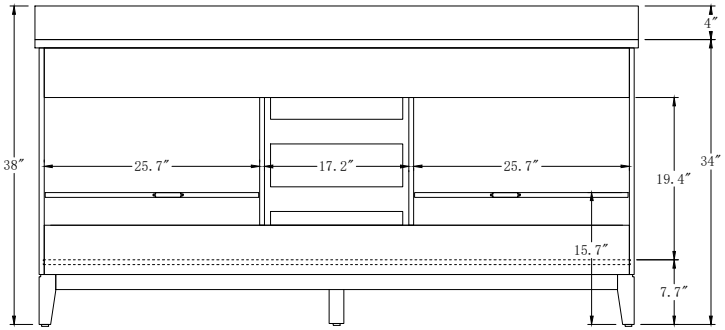
Cabinet:72"x22"x38"