BATHLYN
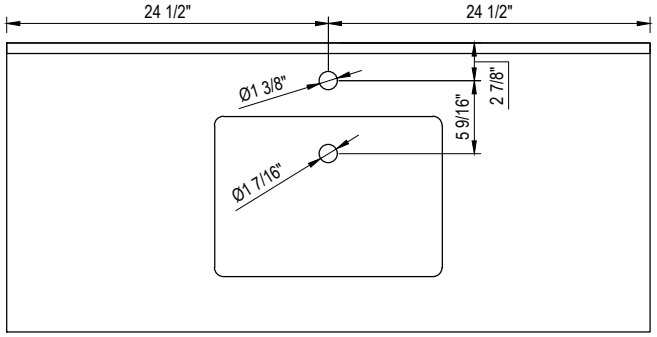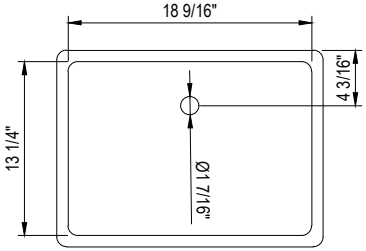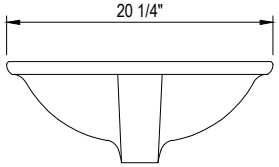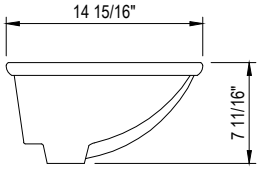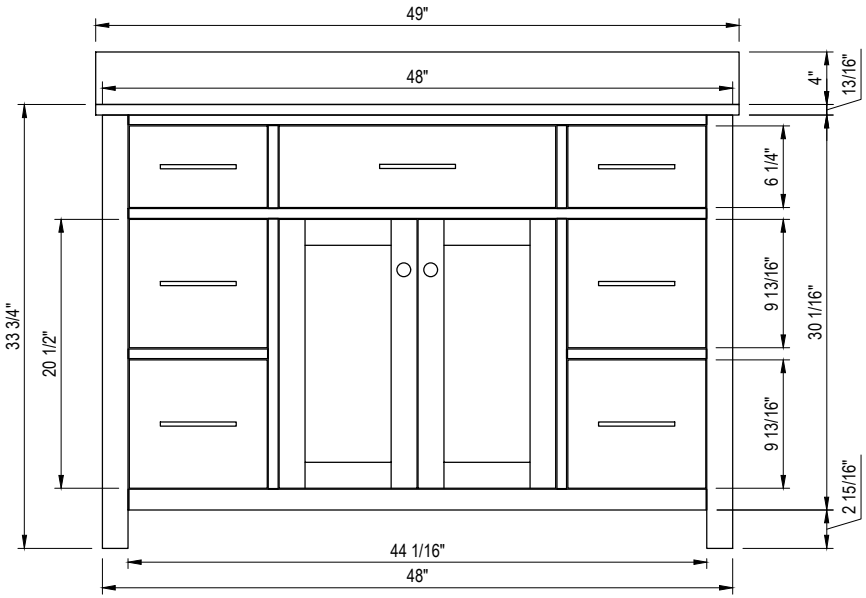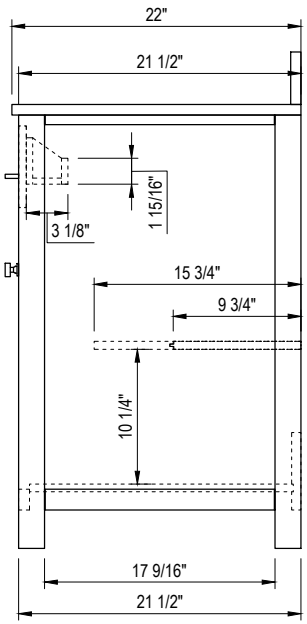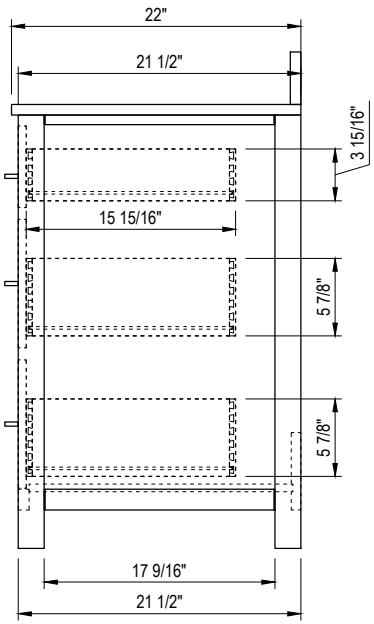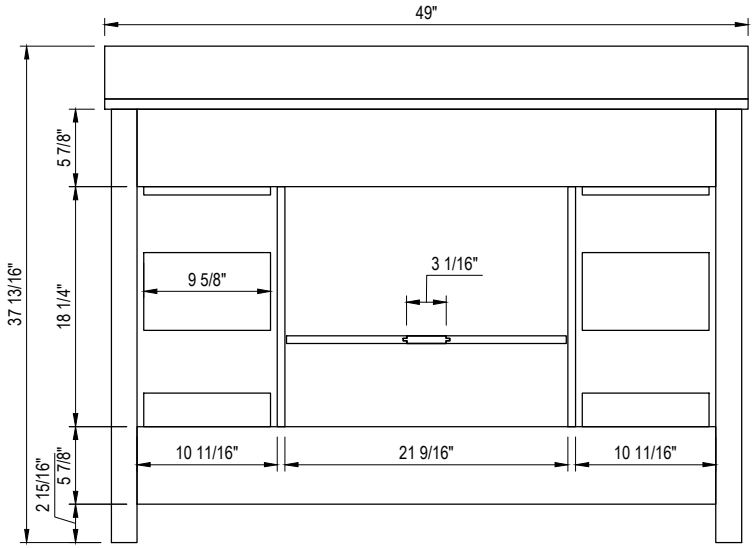
JACKLYN-49