DIMENSIONS

Streamline

Rough-In Dimensions

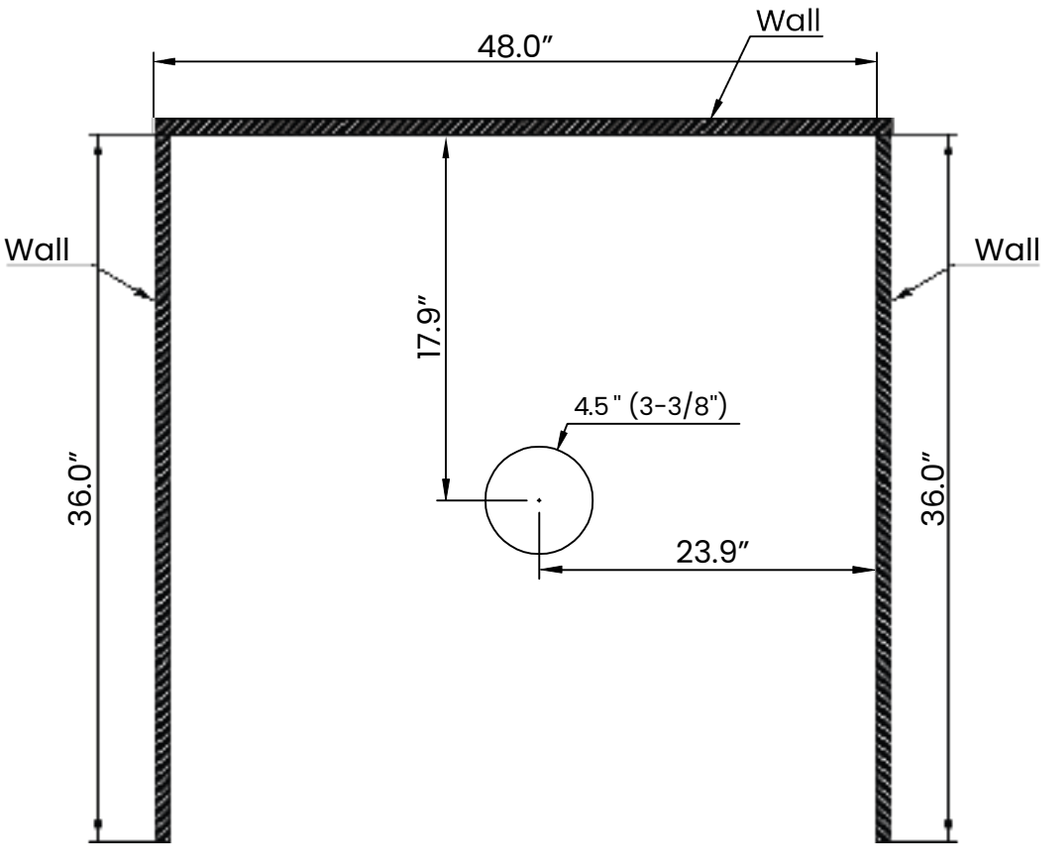

Product Dimensions

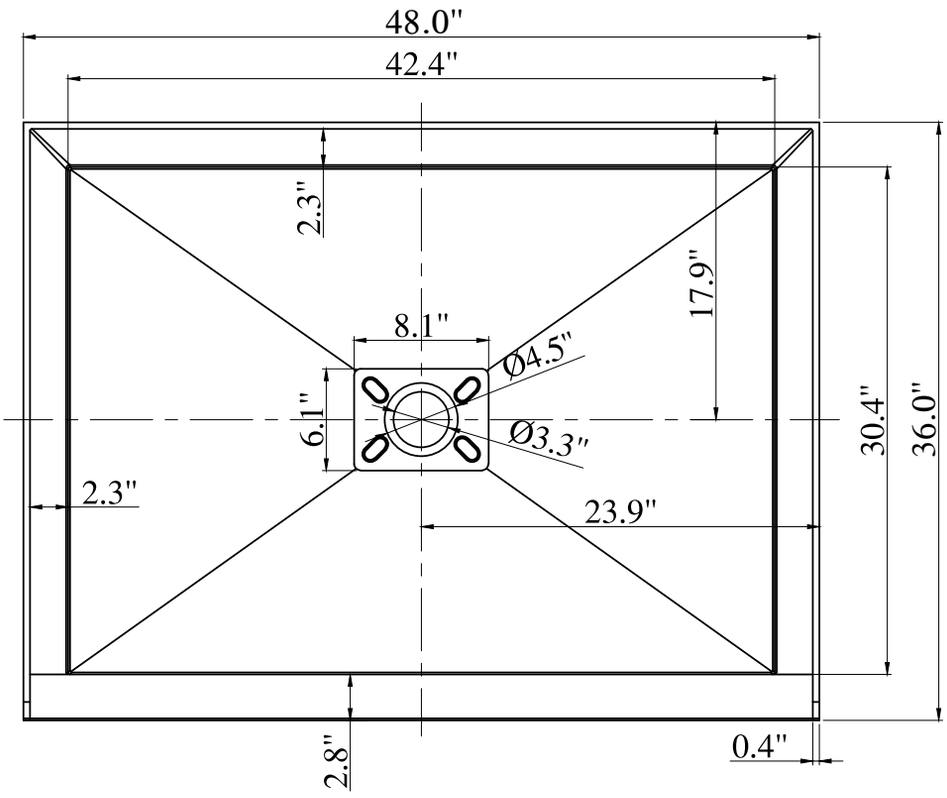

Model number:
GB-2530-124-BL

DIMENSIONS

Streamline

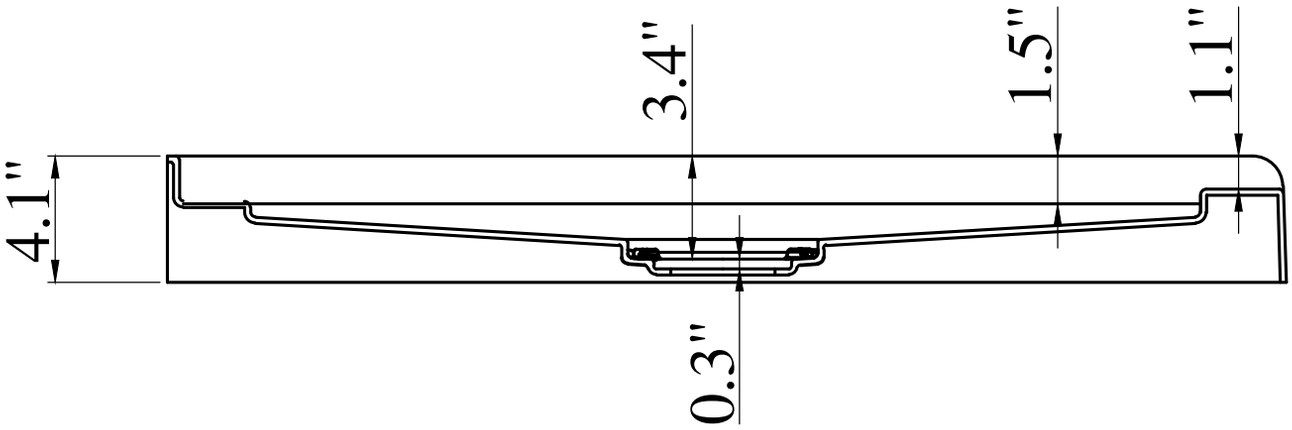

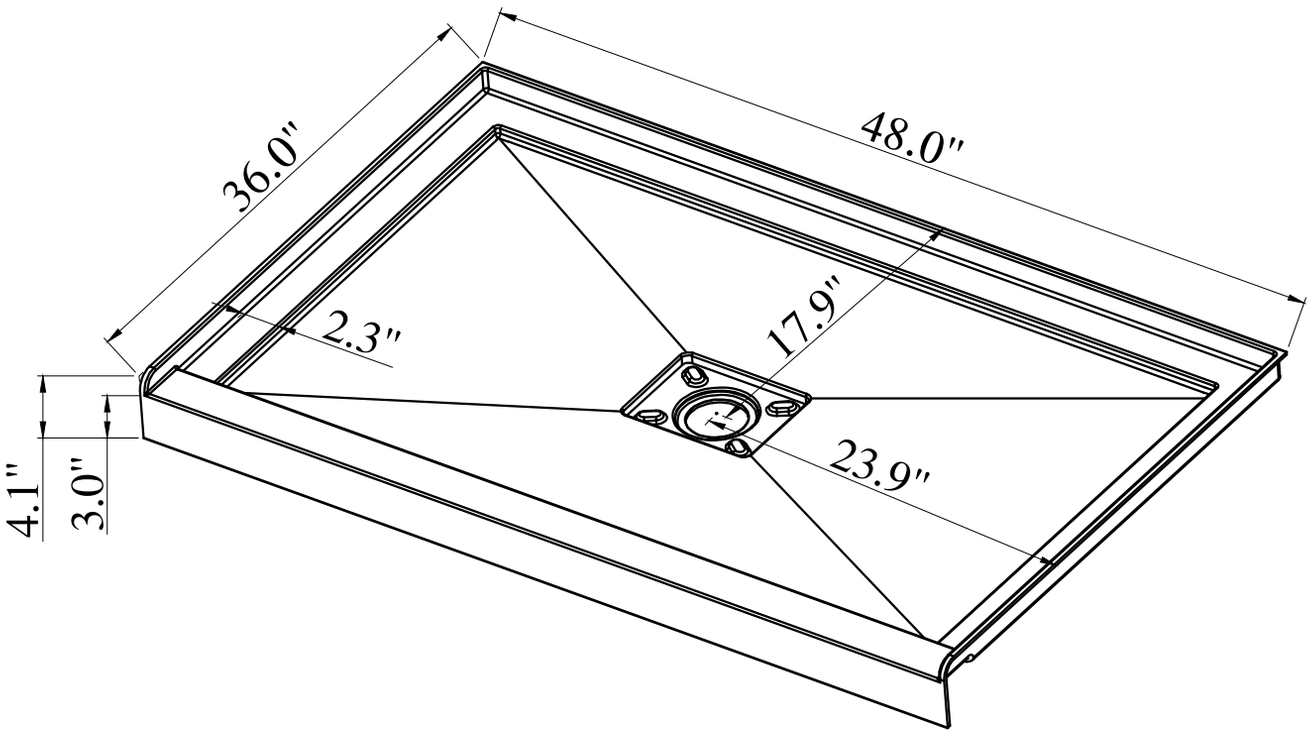

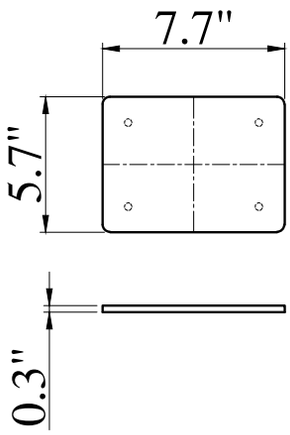
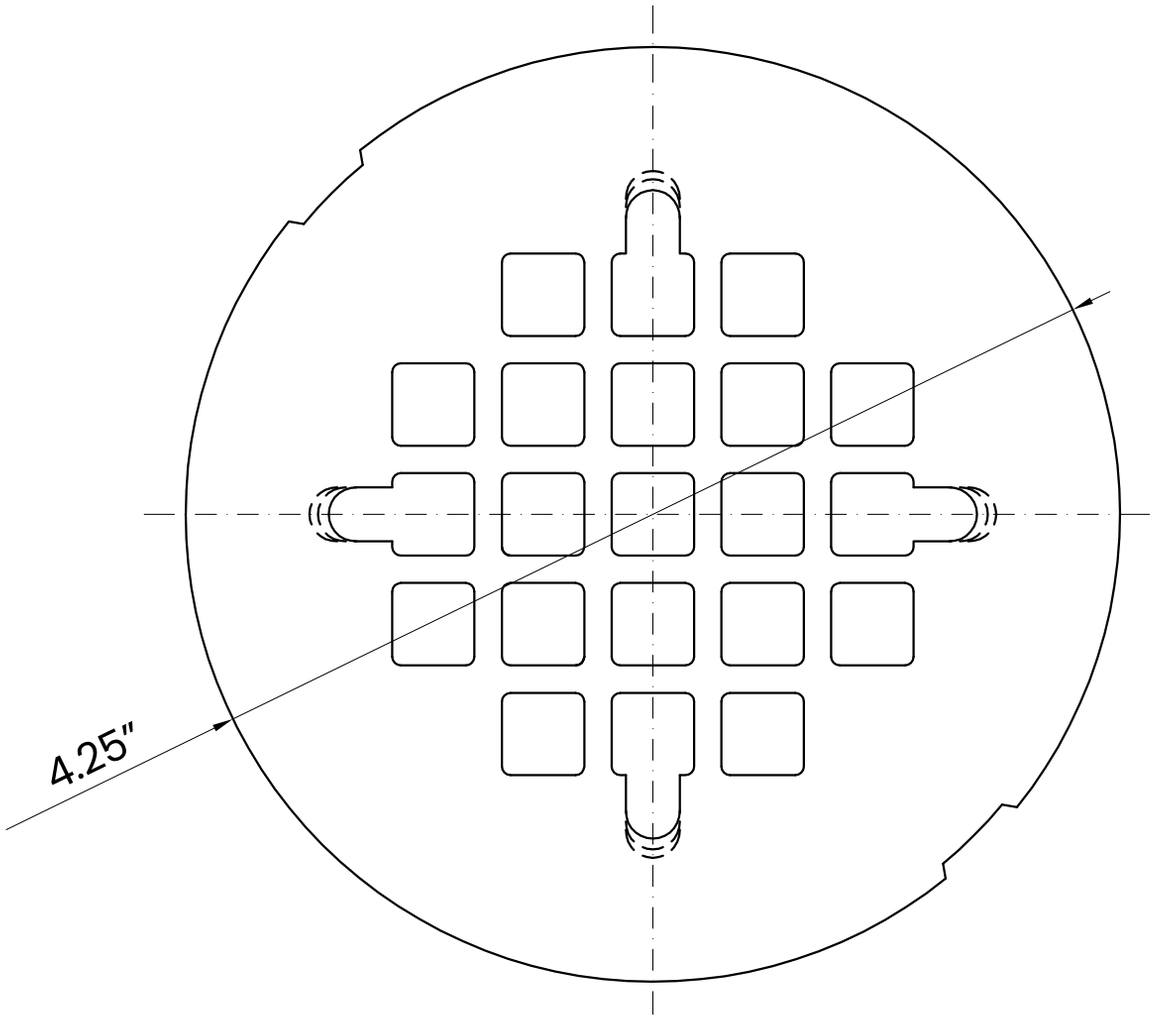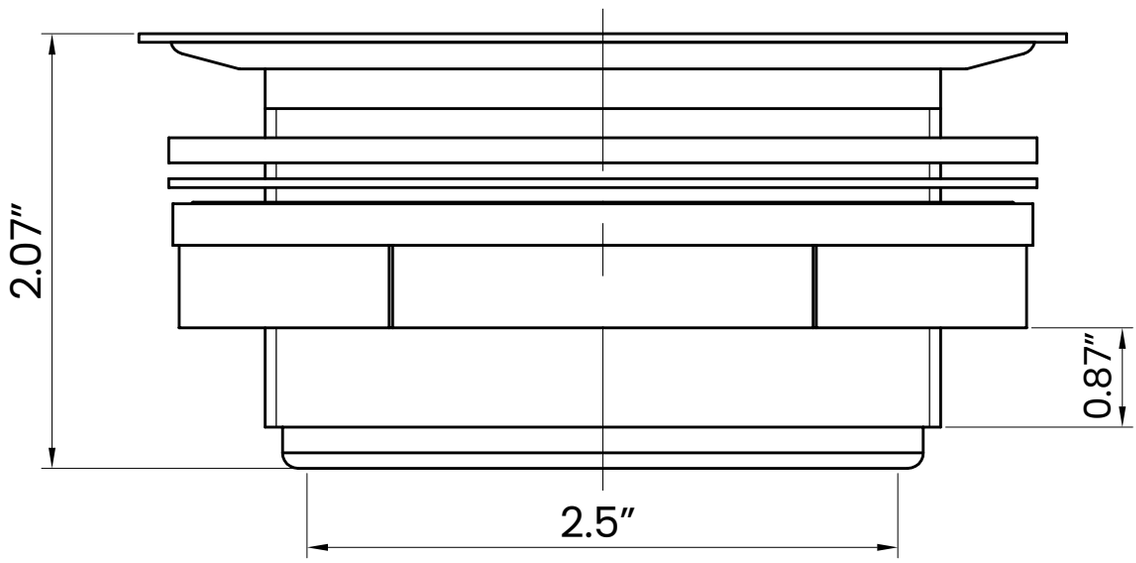
DIMENSIONS