WARNING: Al for Part C&M are located inside the Left armrests (Part A for Al) and Part D are located inside The right armrests (Part B for Al) - Accessible via a Velcro strip at the back.

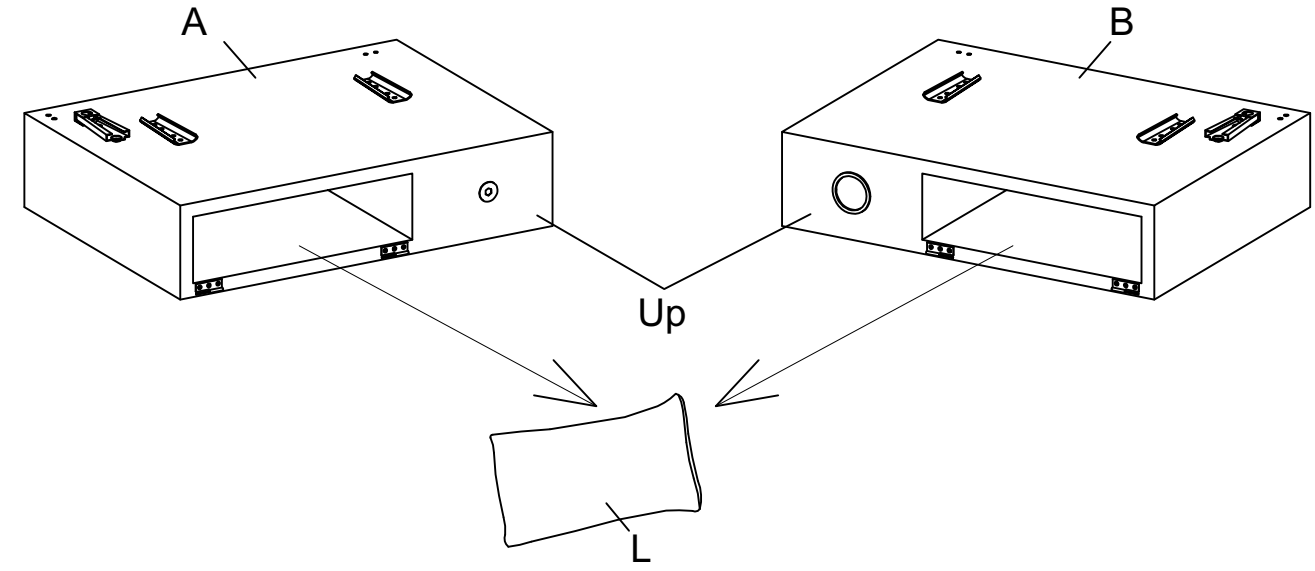

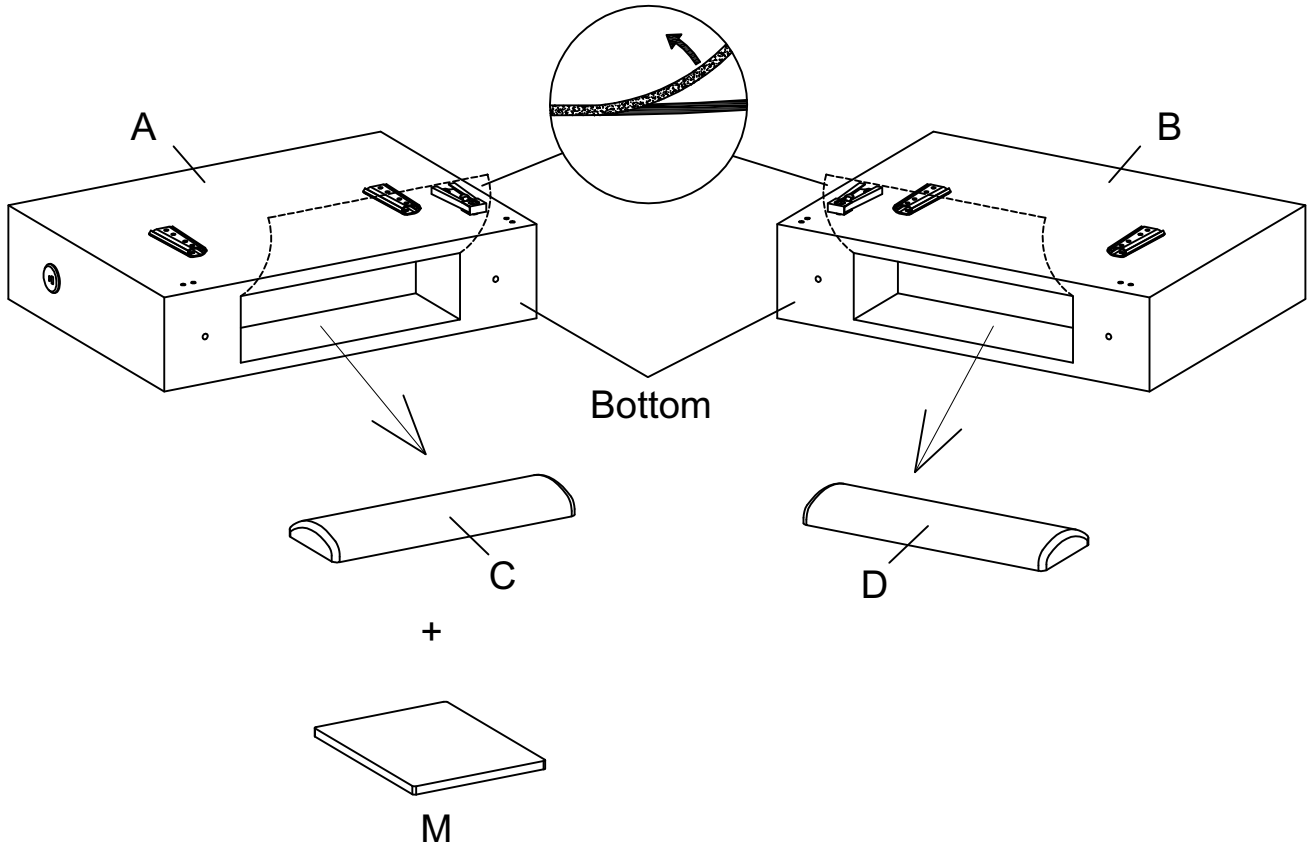

ASSEMBLY INSTRUCTION

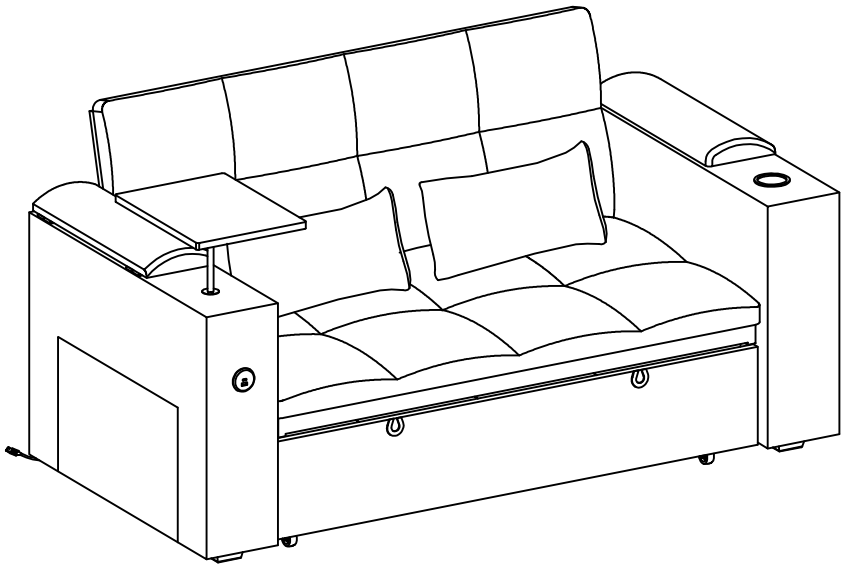

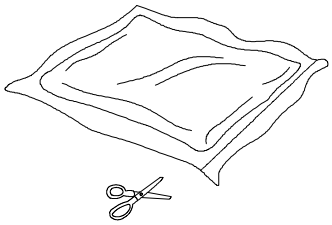

Carefully open the compression bag.

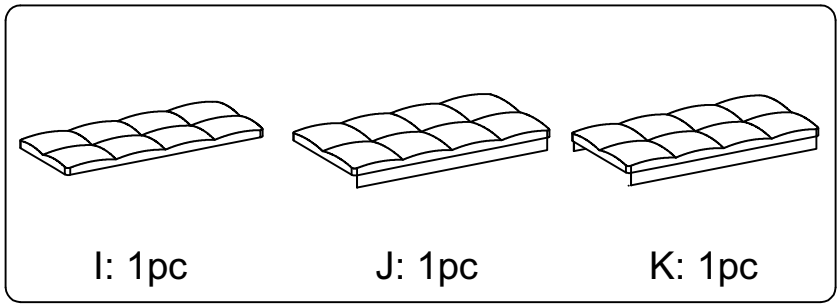

TIPS:

Wait patiently for the rebound; This is the key! It takes 12-24 hours (or more) for the upholstery to fully regain its full shape and comfort.

During or after recovery, gently pat and knead the surface and edges of the backpack to help evenly distribute the inner padding and eliminate transport indentations. If there are folds, try gently stretching the fabric in different directions to flatten it.

Parts List

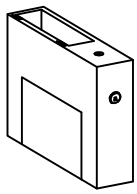 A: 1pc	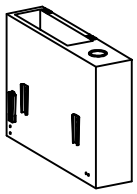 B: 1pc	 C: 1pc	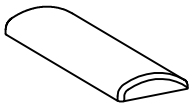 D: 1pc
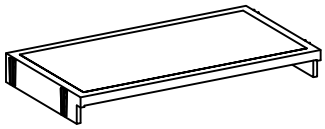 E: 1pc	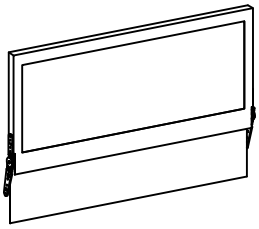 F: 1pc	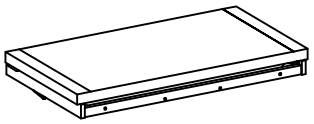 G: 1pc	 H: 1pc
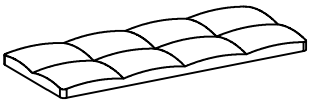 I: 1pc	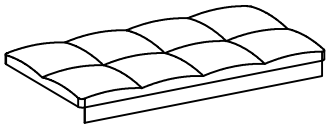 J: 1pc	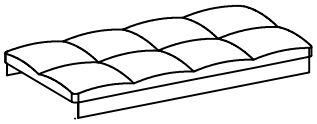 K: 1pc	 L: 2pcs
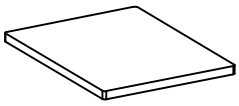 M: 1pc	 N: 1pc	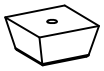 O: 4pcs	

Hardware List

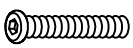 M8*60mm 1: 4pcs	 M6*35mm 2: 4pcs	 M6*15mm 3: 4pcs	 M6*16mm 4: 8pcs	 5: 2pcs
 6: 4pcs	 7: 2pcs	 8: 20pcs	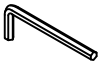 M8 9: 1pc	 M6 10: 1pc
 11: 1pc	 12: 1pc	 M6*25mm 13: 4pcs		

Assembly Steps

STEP 1:

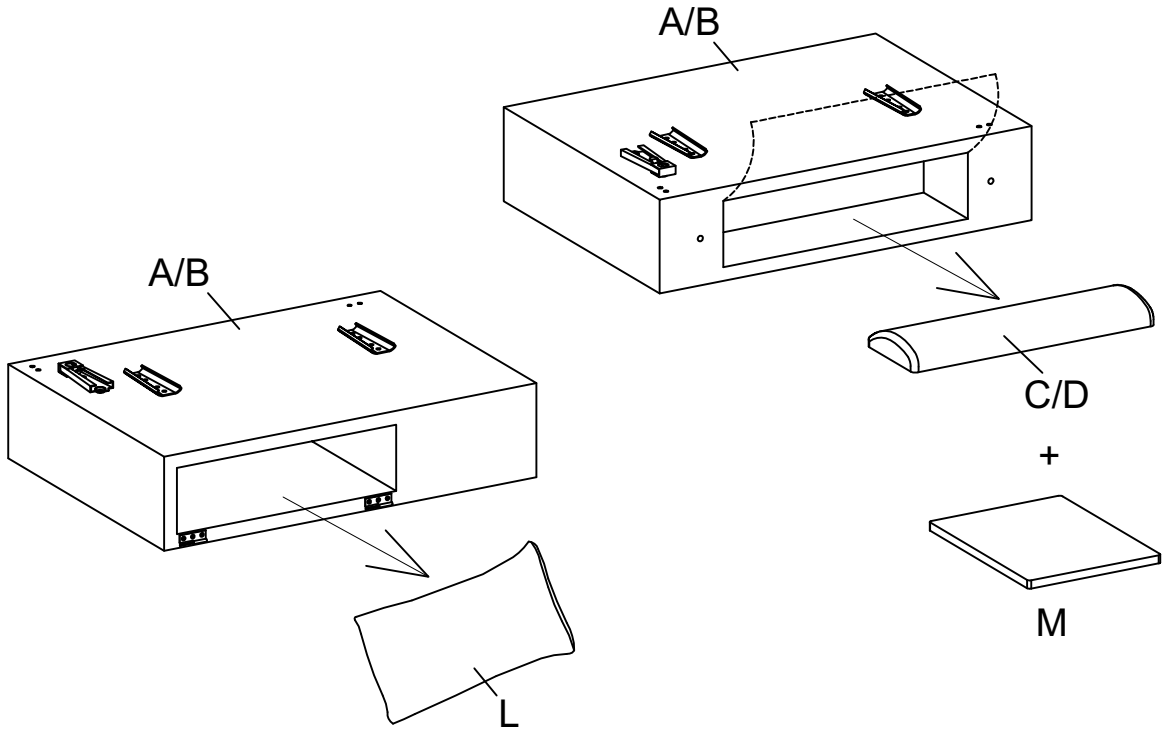

STEP 2:

1	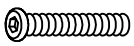	4PCS
3		4PCS
5		2PCS
9		1PC
10		1PC

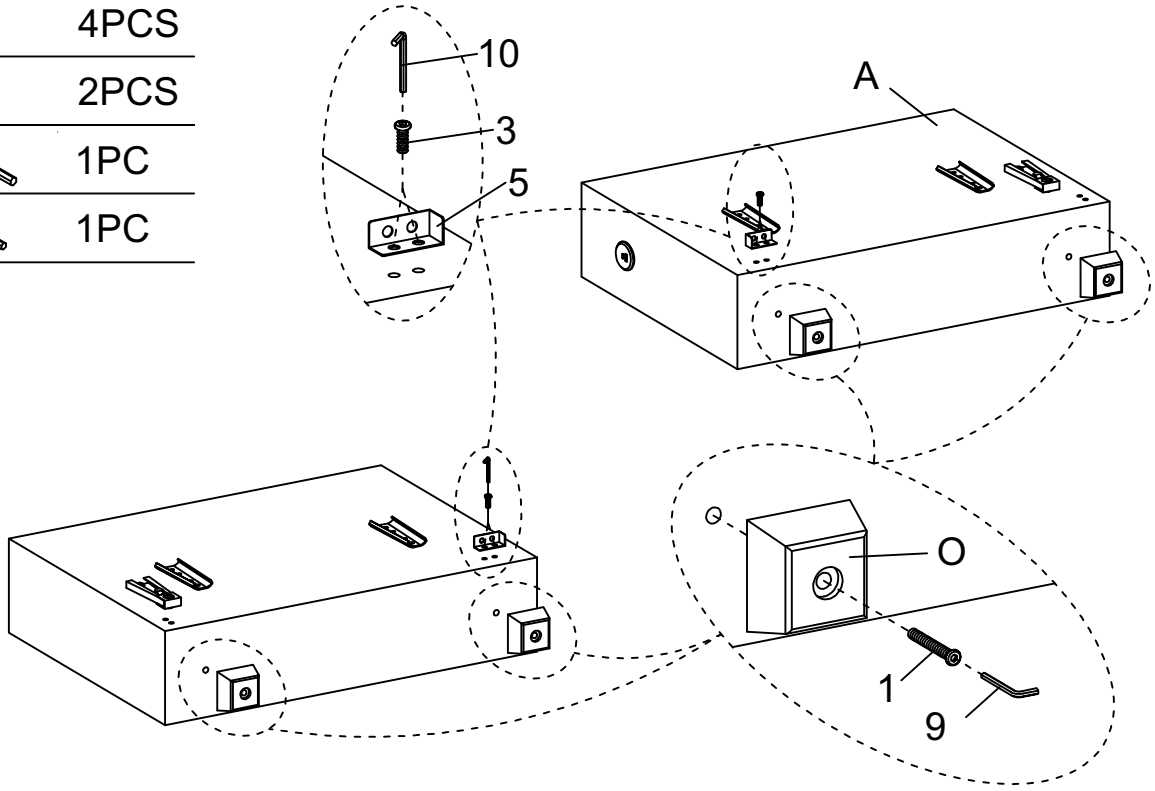

Assembly Steps

STEP 3:

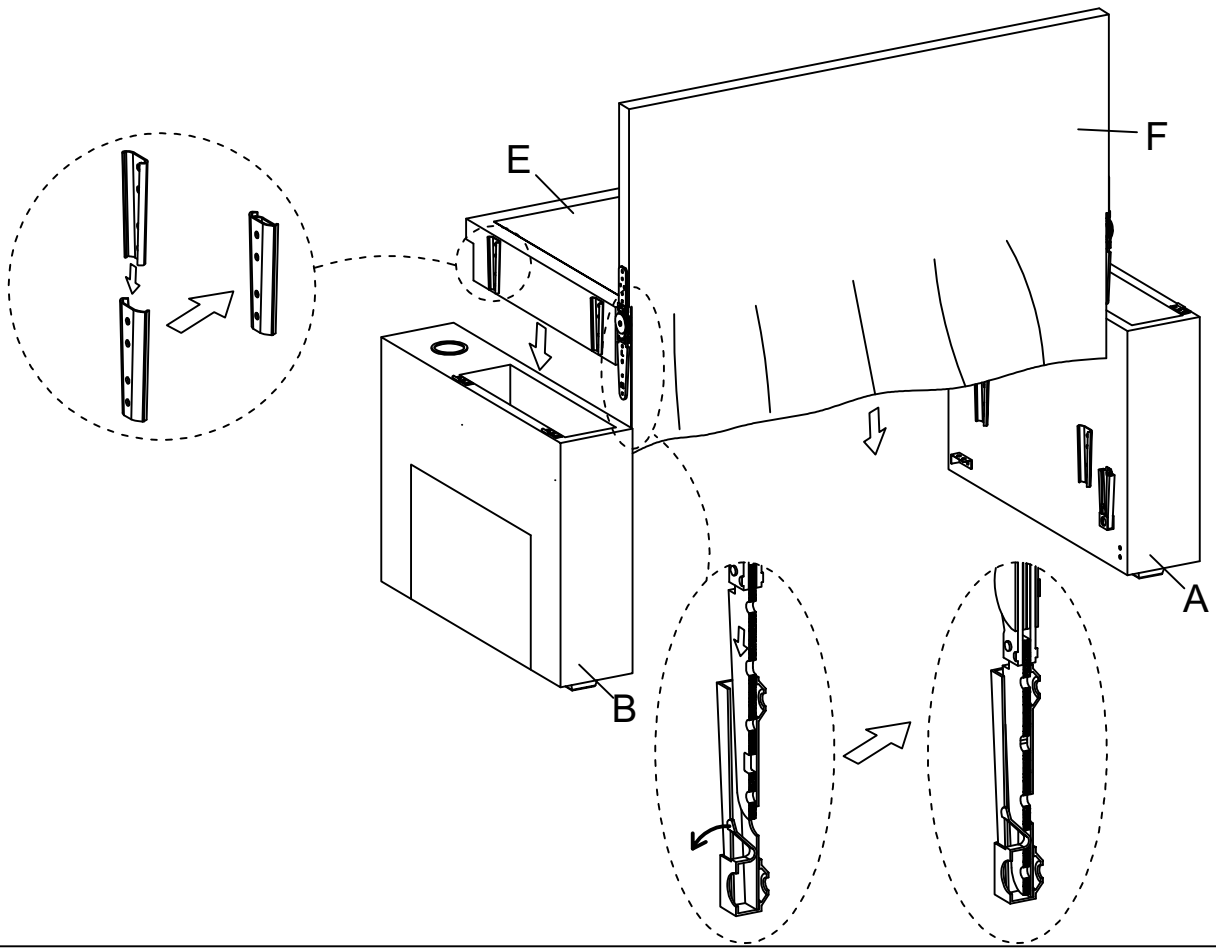

STEP 4:

13		4PCS
4		4PCS
10		1PC

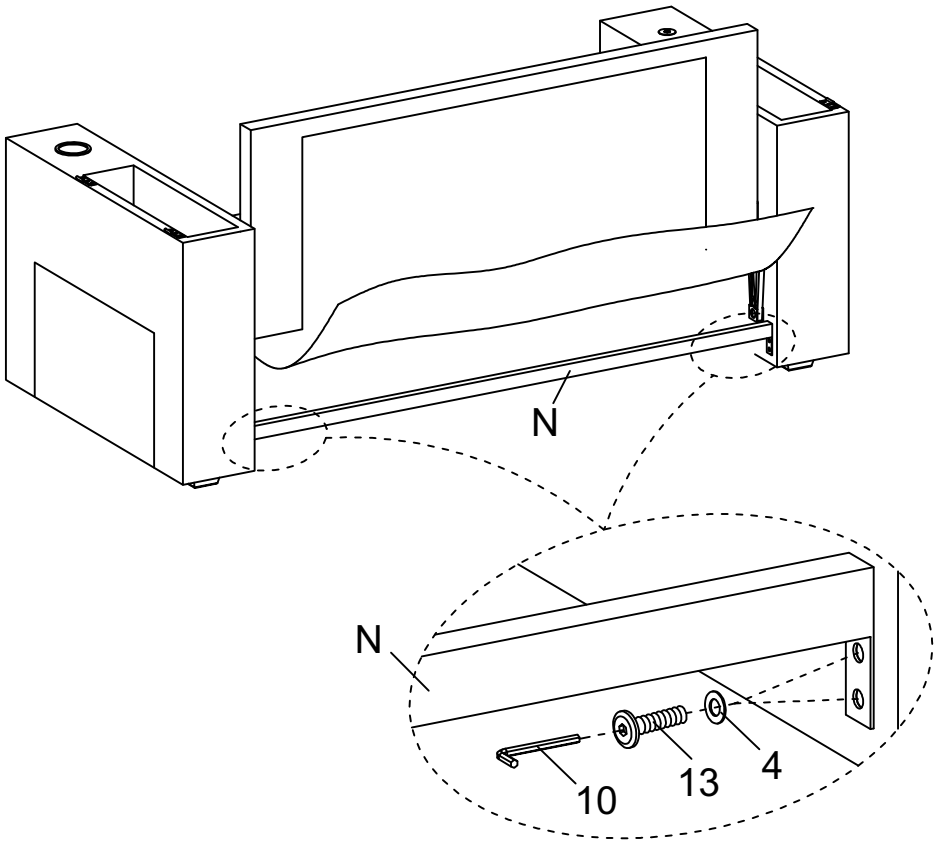

Assembly Steps

STEP 5:

2		4PCS
4		4PCS
10		1PC

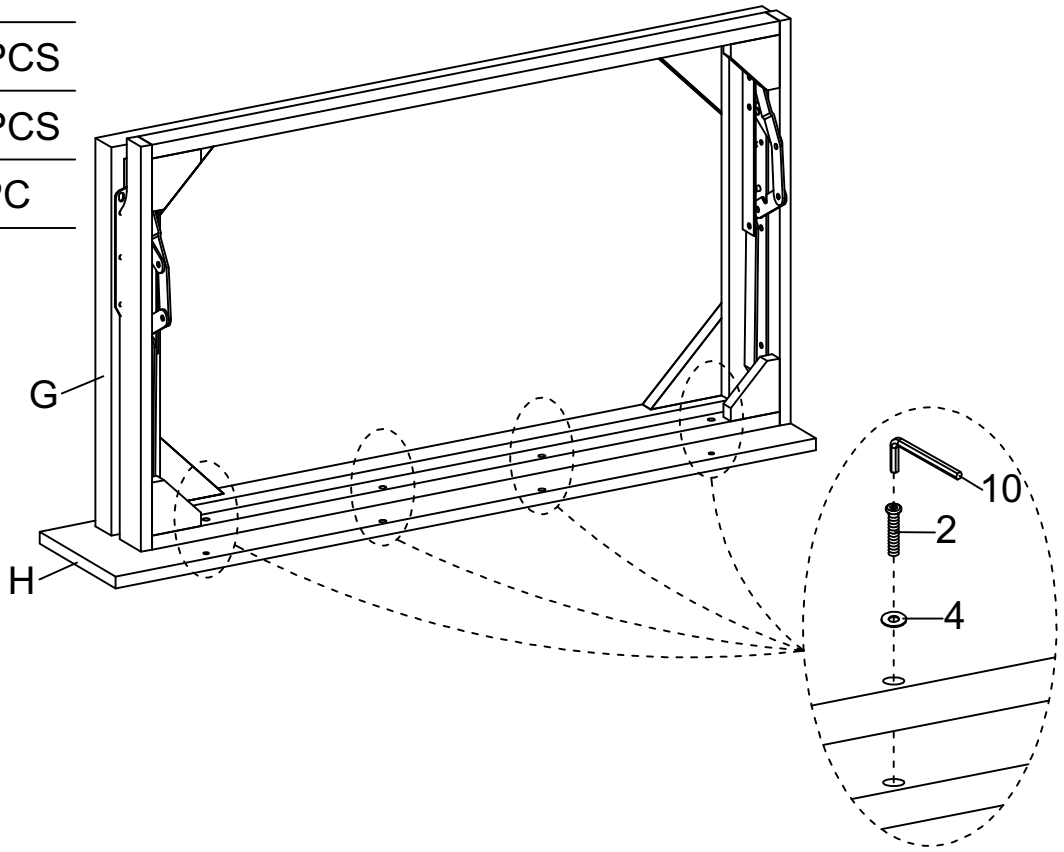

STEP 6:

6		4PCS
7		2PCS
8		20PCS
11		1PC

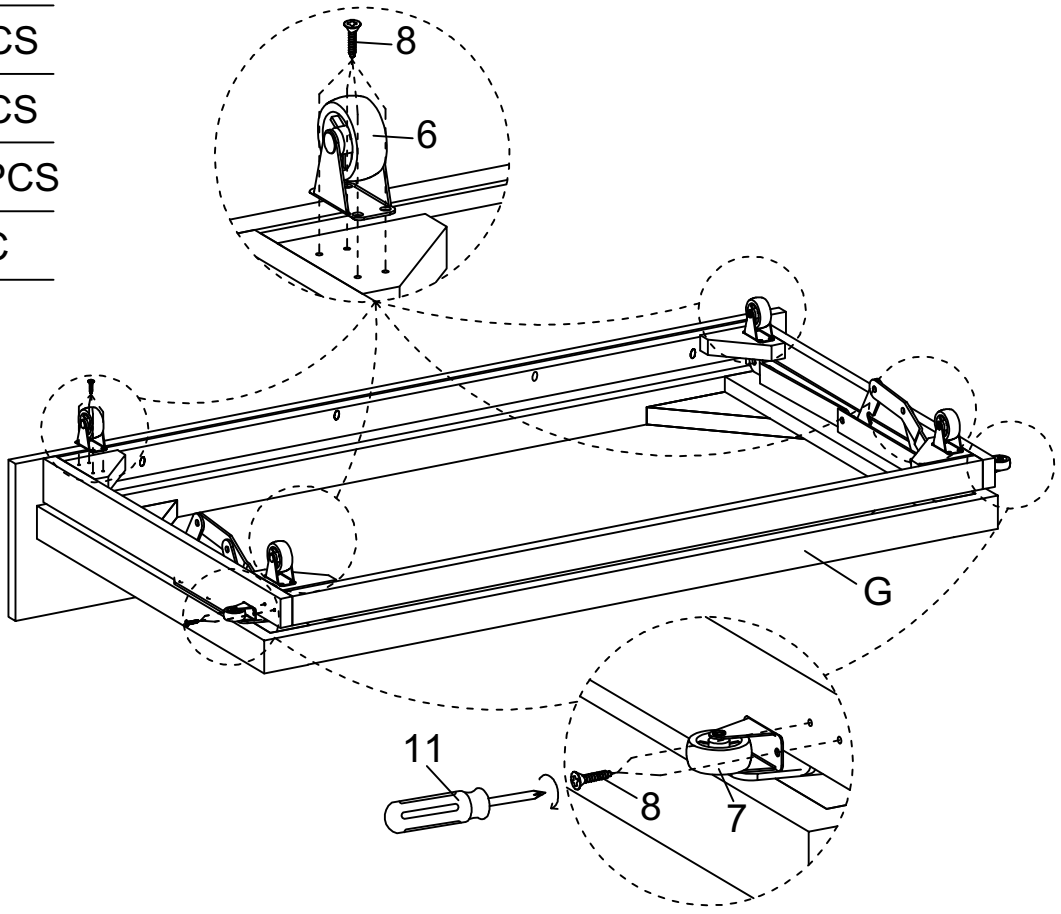

Assembly Steps

STEP 7:

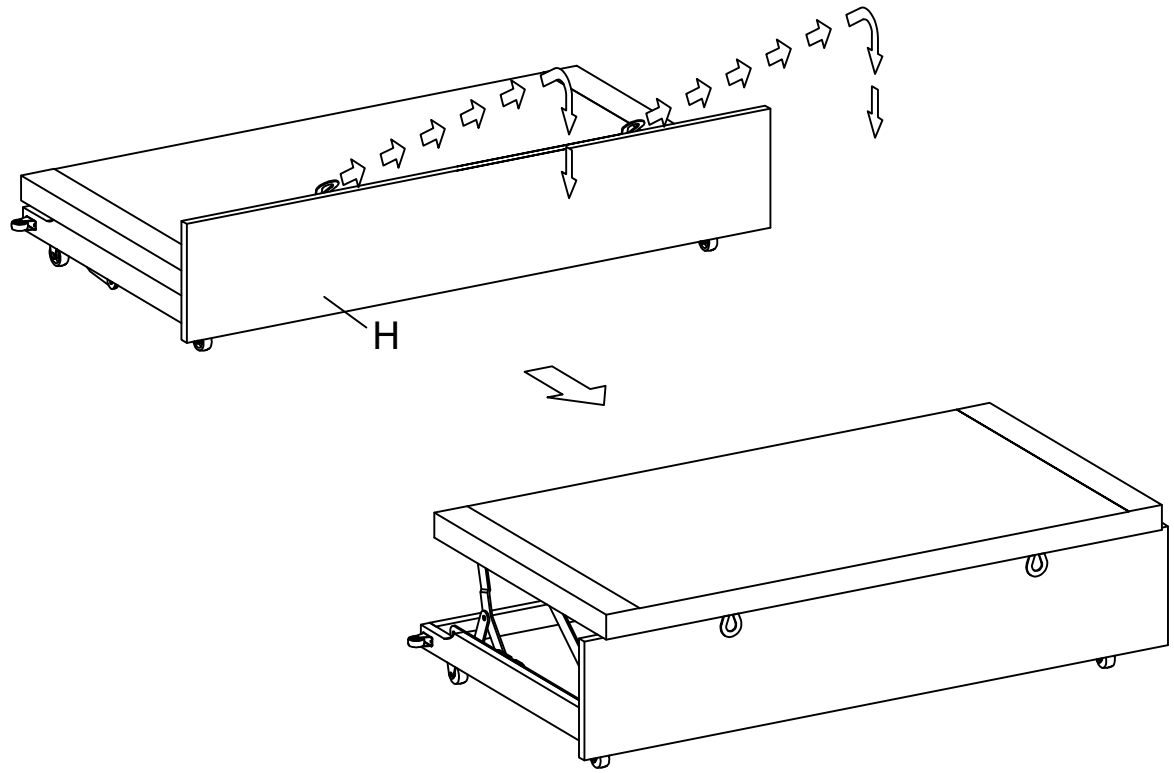

STEP 8:

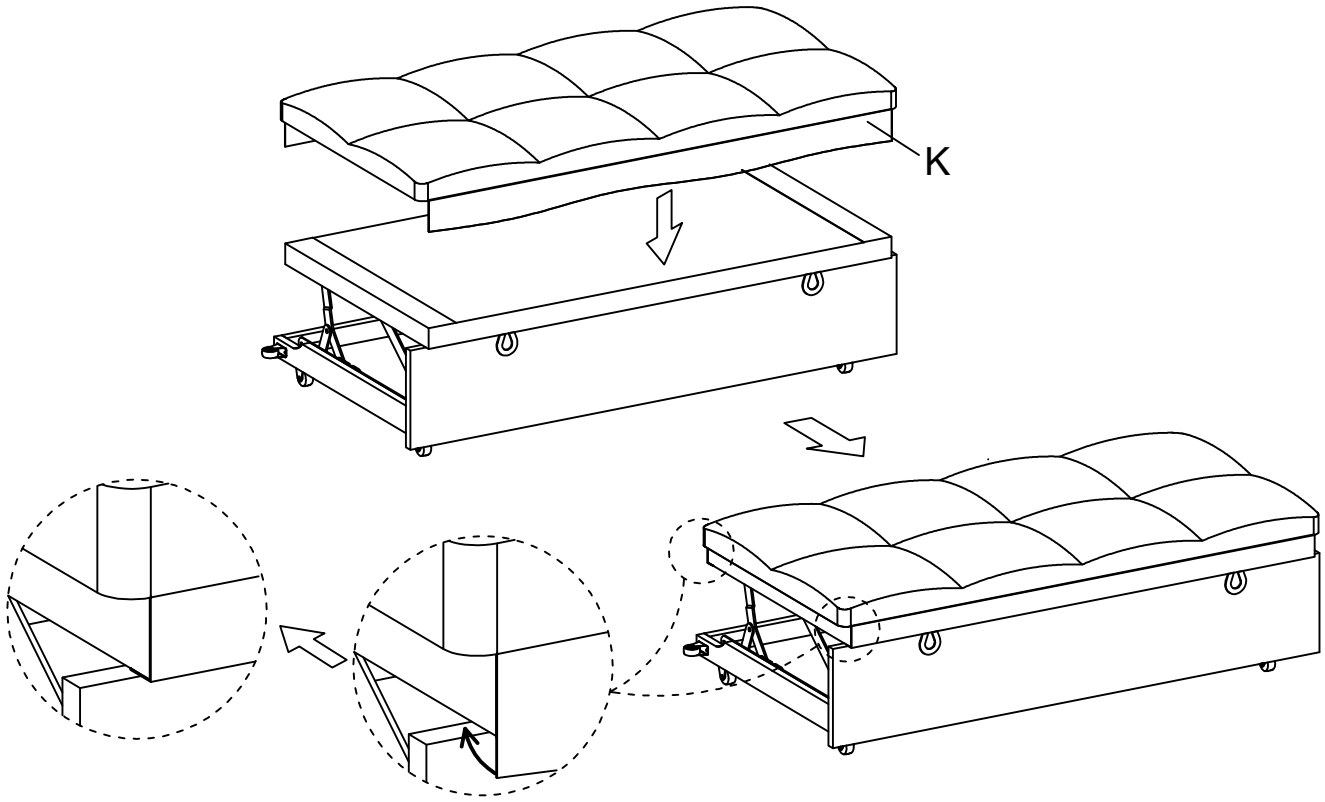

Assembly Steps

STEP 9:

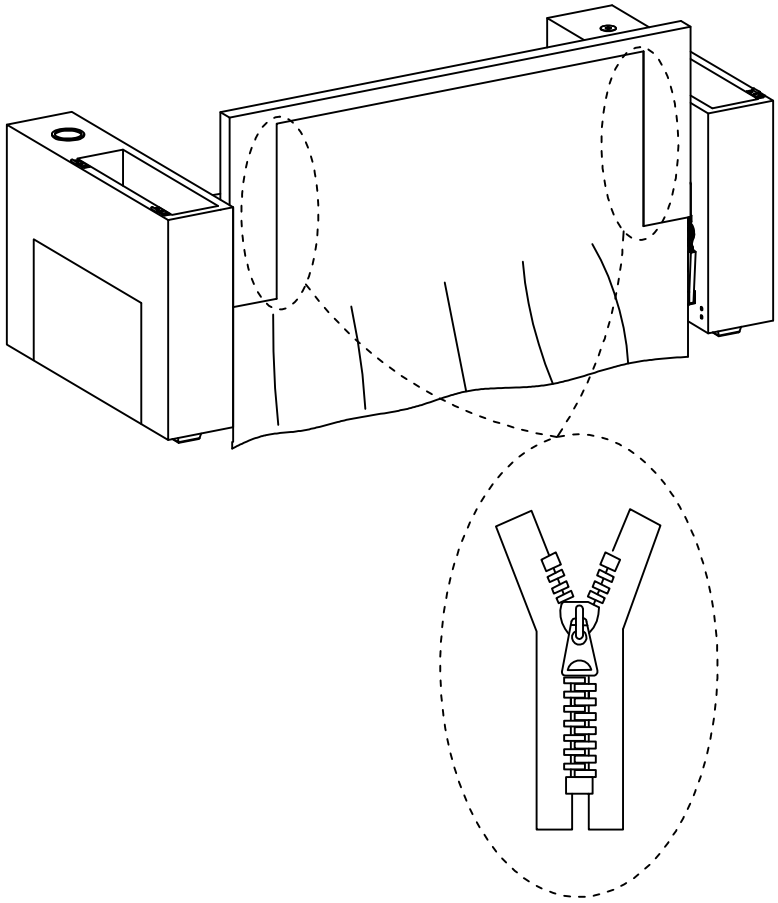

STEP 10:

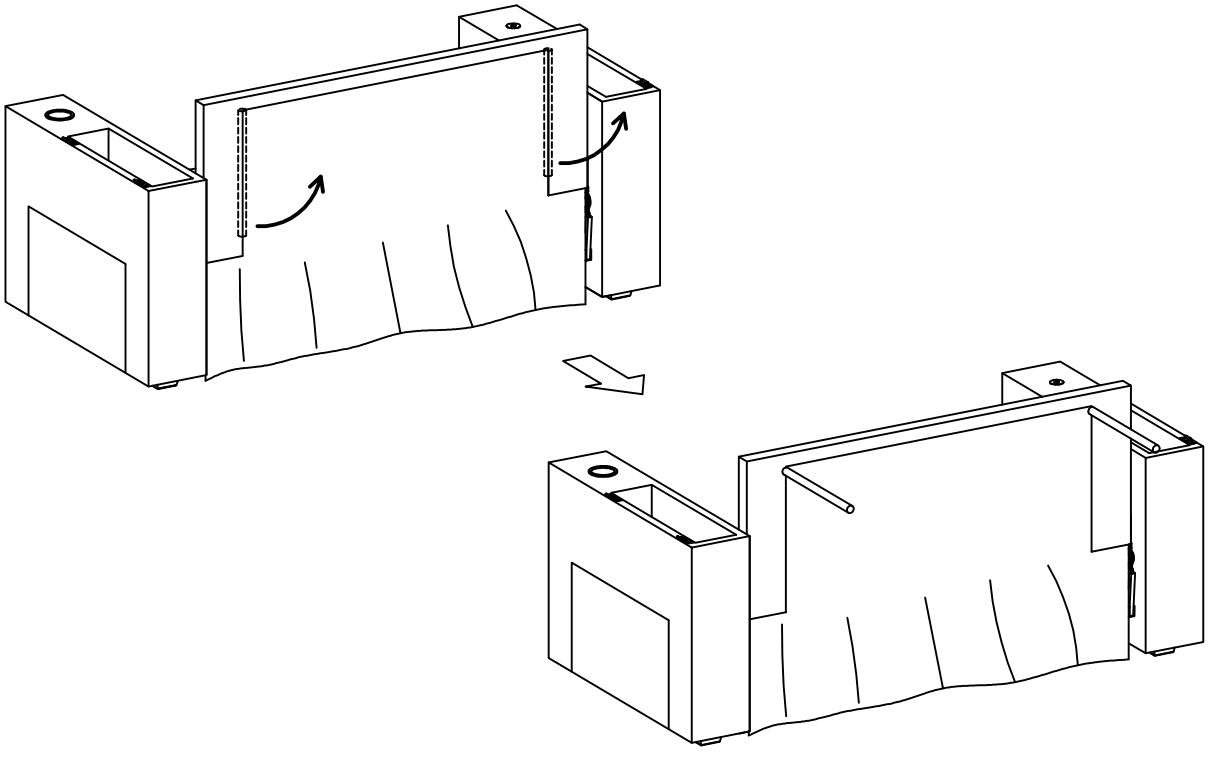

Assembly Steps

STEP 11:

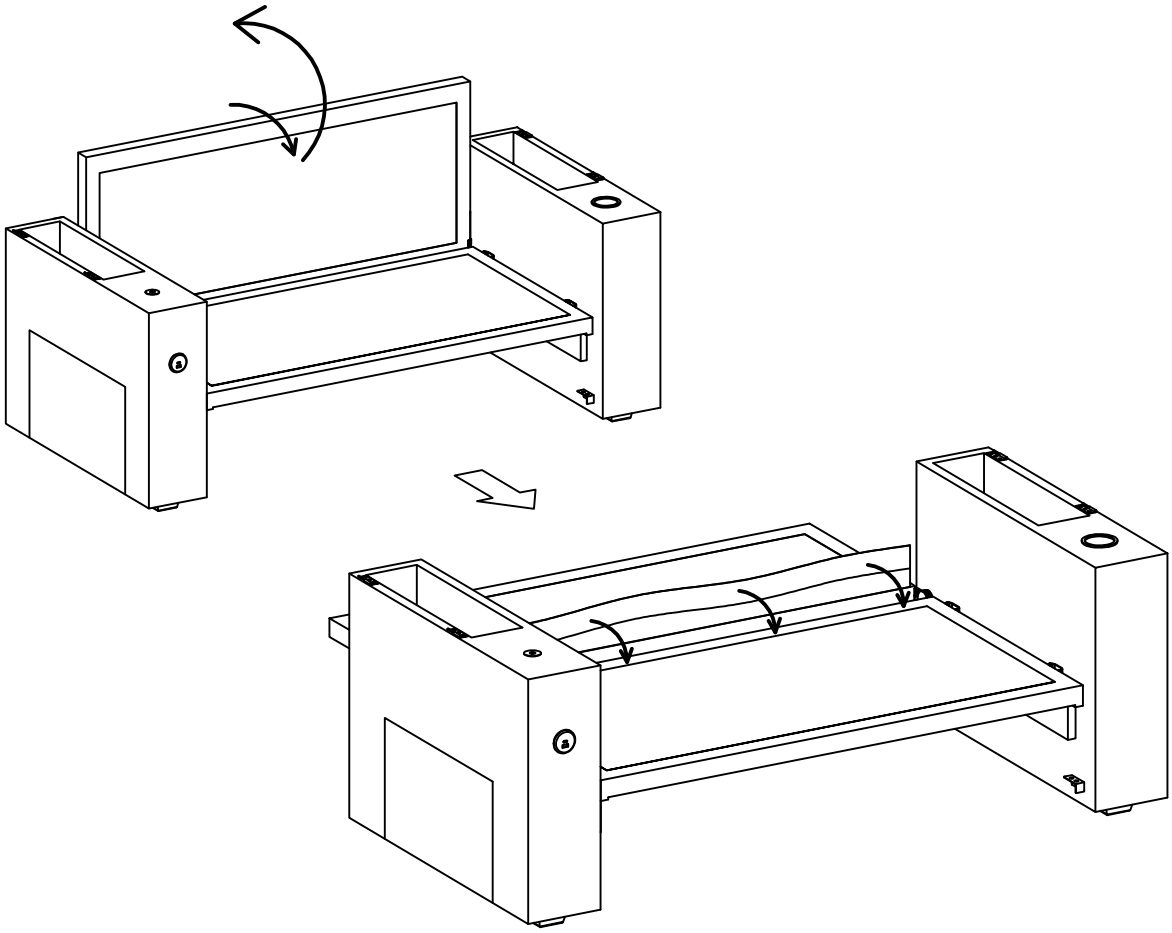

STEP 12:

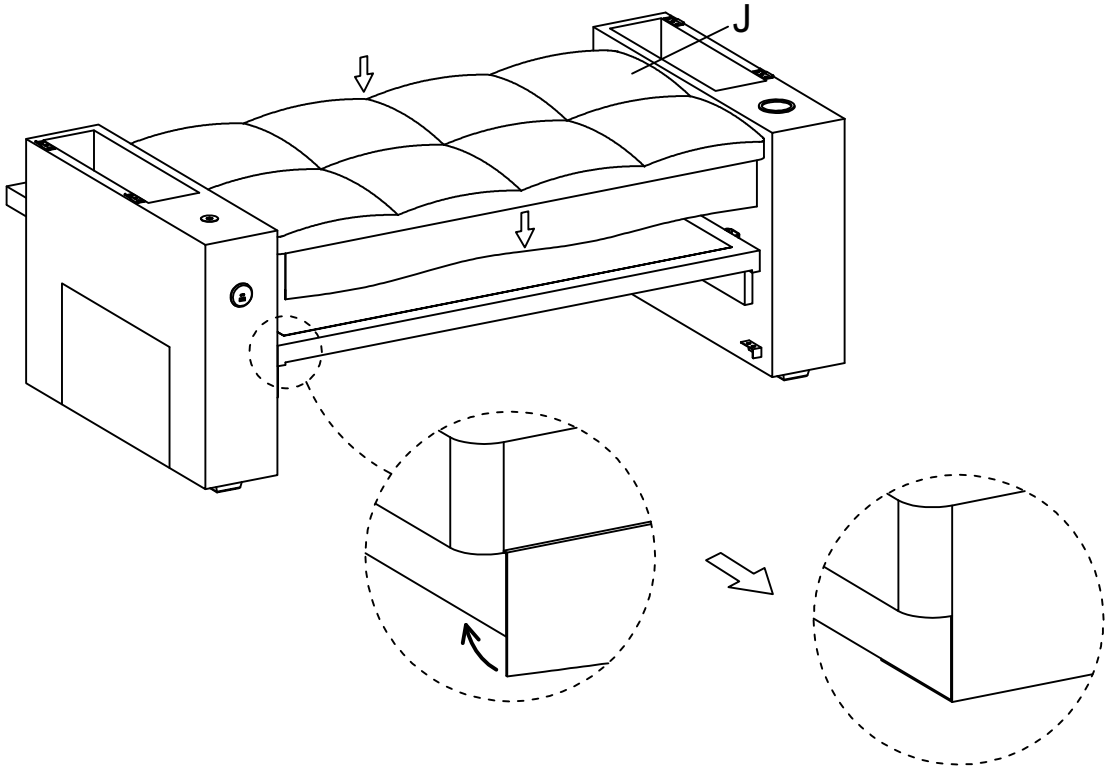

STEP 13:

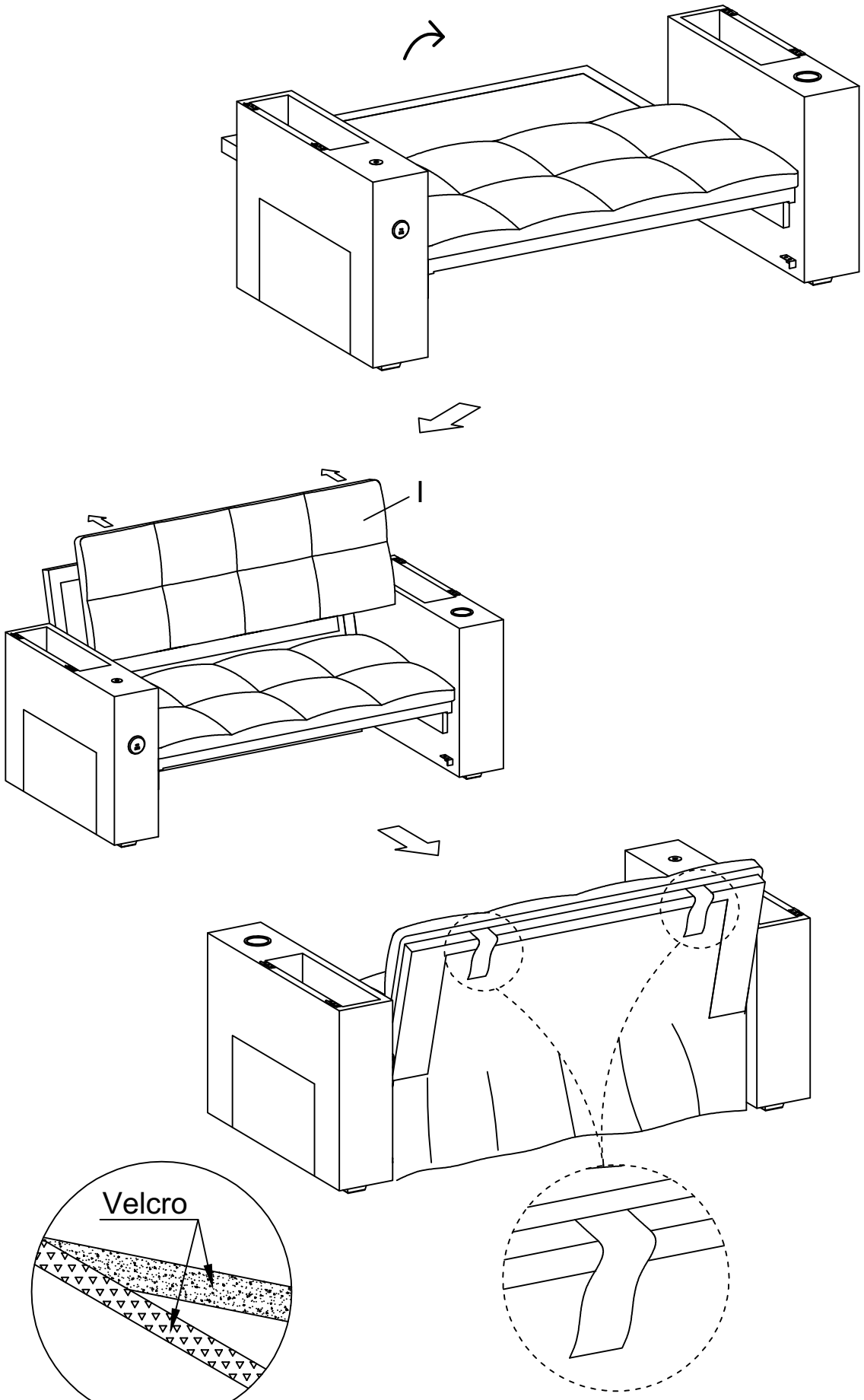

Assembly Steps

STEP 14:

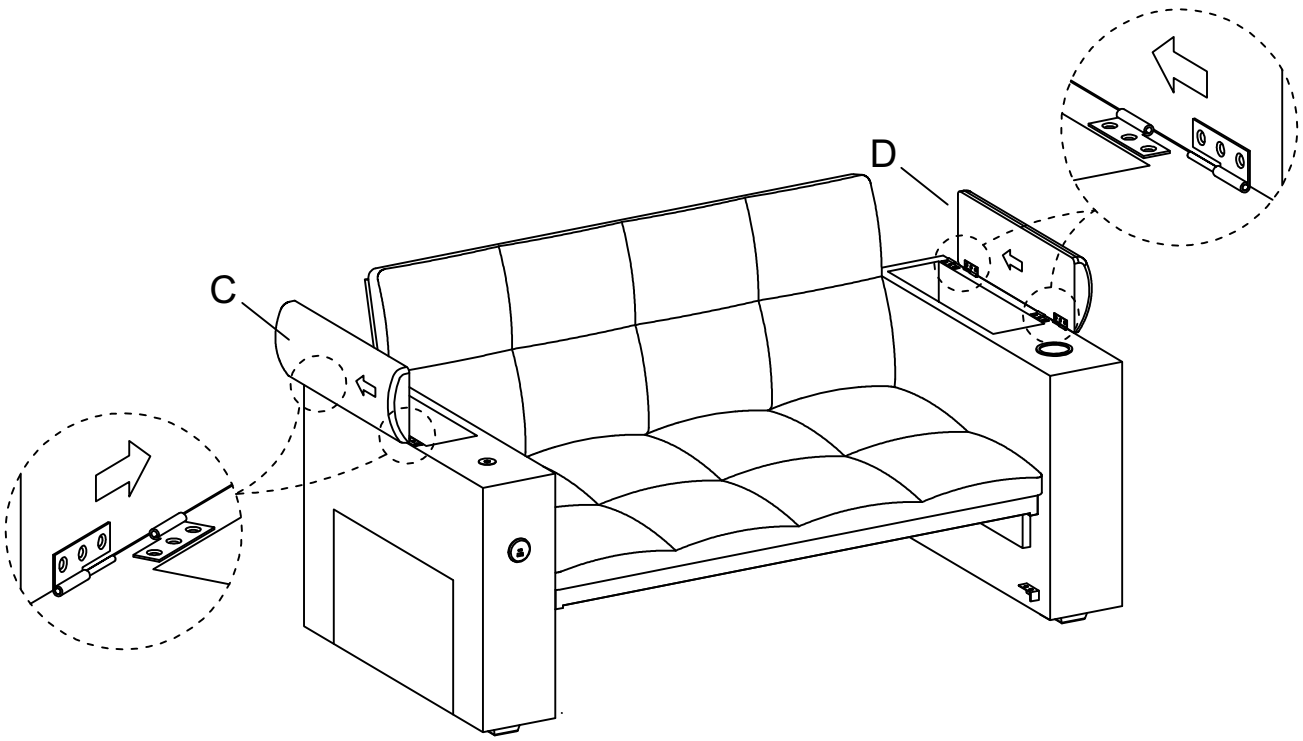

STEP 15:

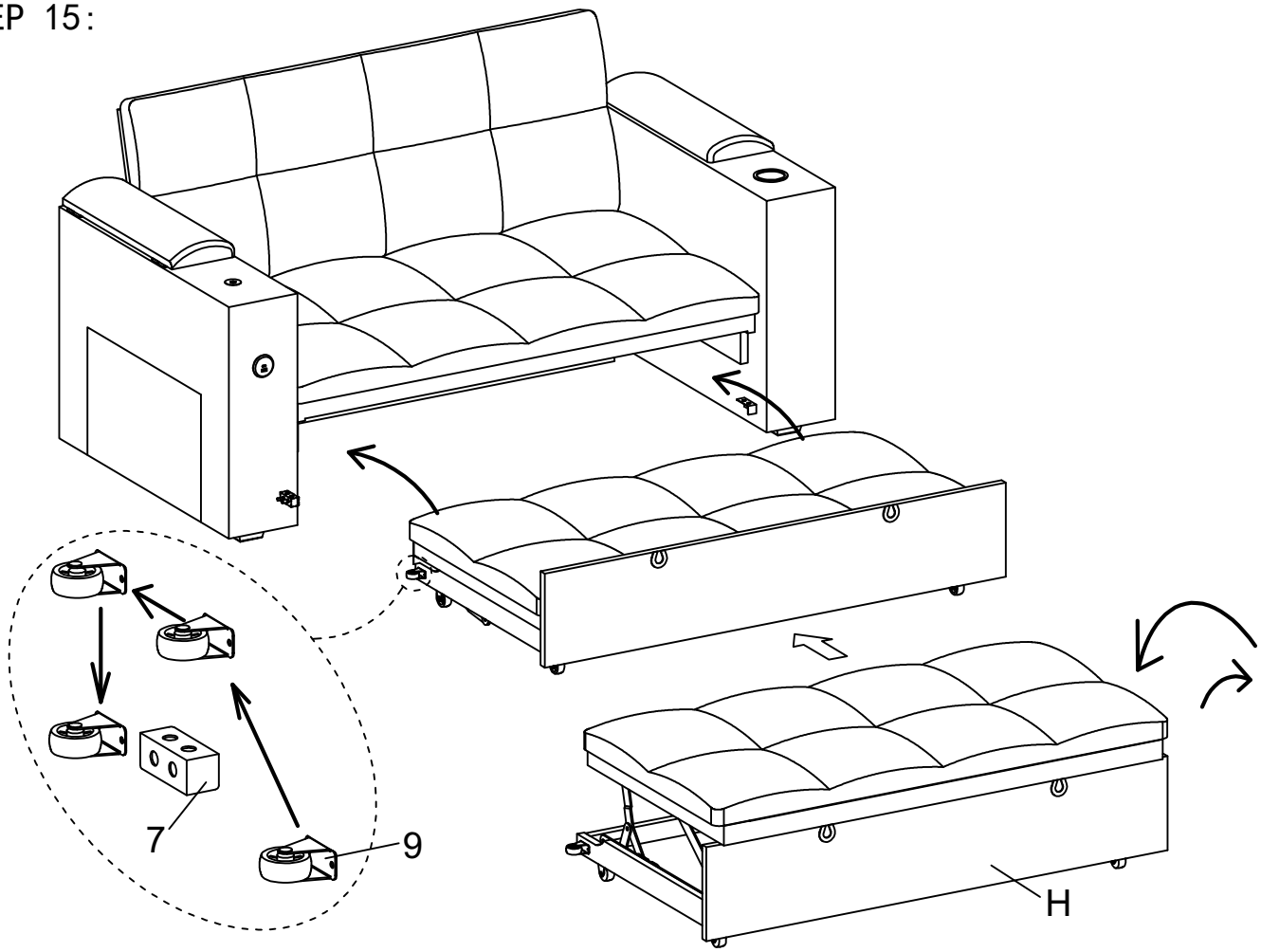

STEP 16:

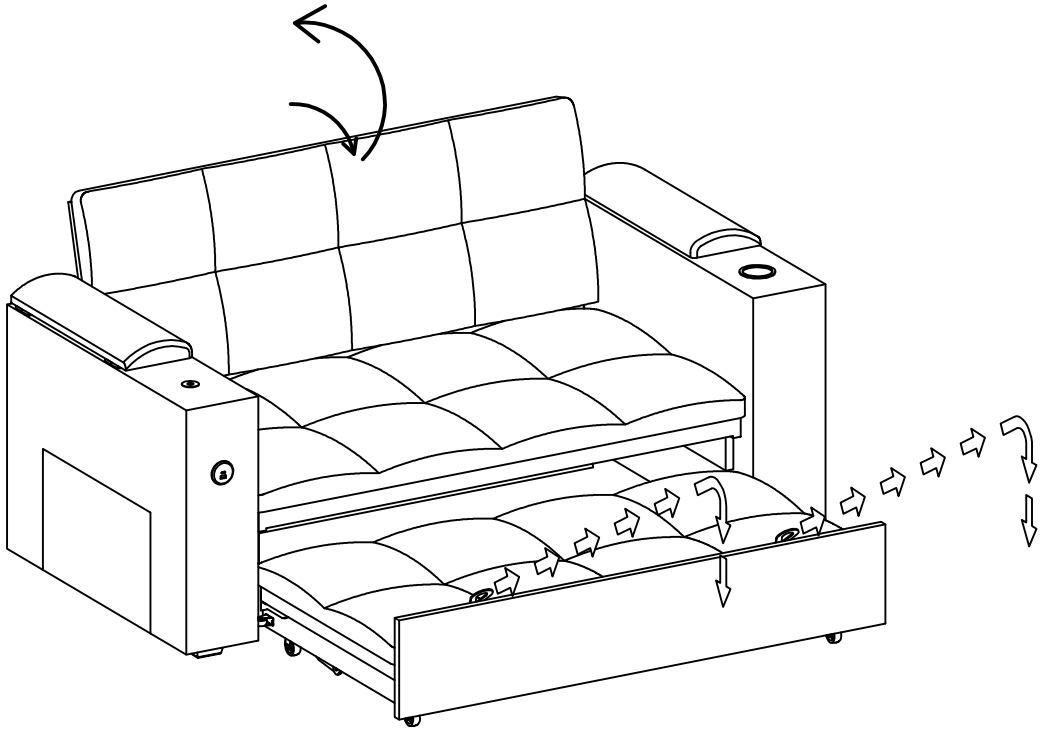

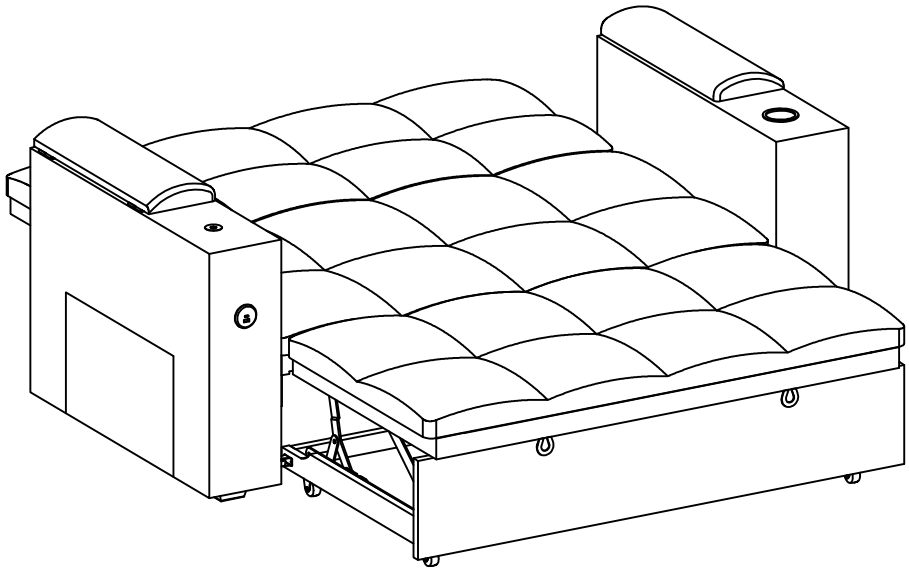

Assembly Steps

STEP 17:

12  1PC

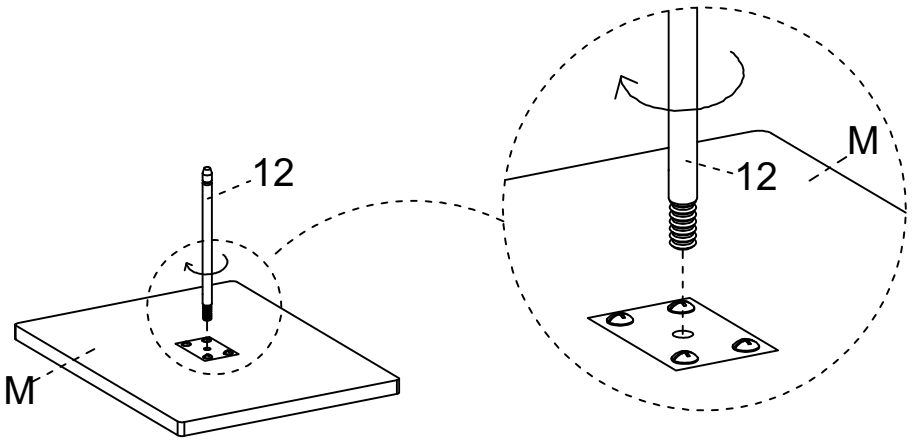

STEP 18:

