ASSEMBLY INSTRUCTION

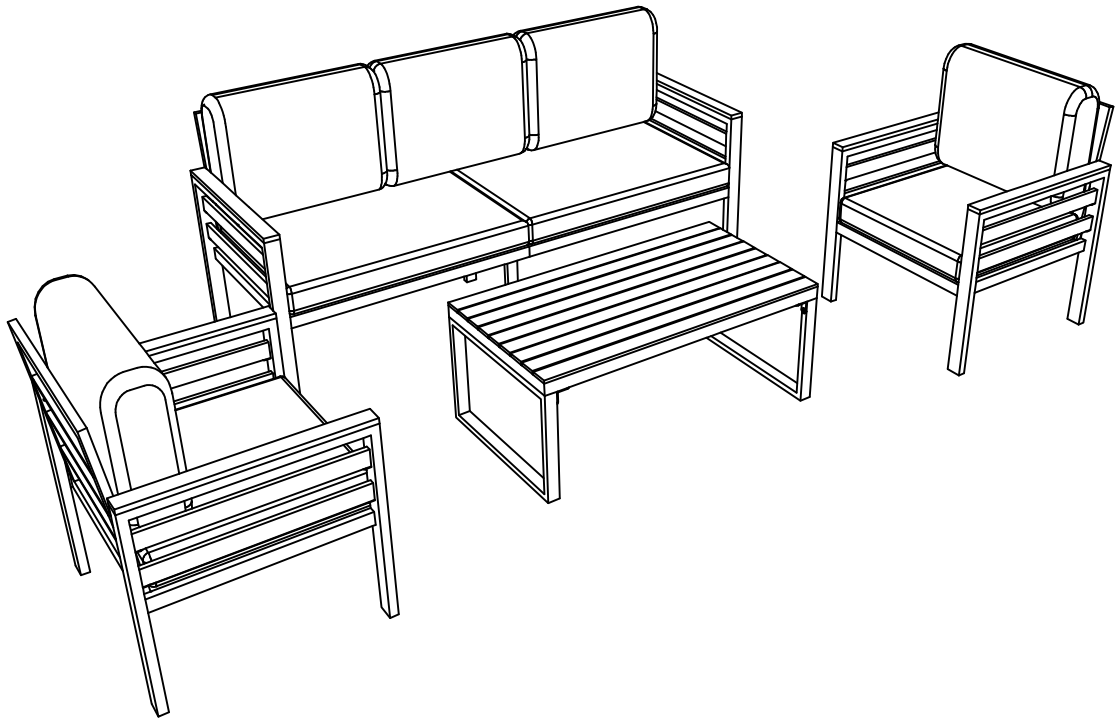

Notice:

1. 50% Tighten before fixing all screws, Allen wrench is recommended instead of an electric drill.
2. Place the item on a flat ground to adjust and make sure it remains stable.
3. Tighten up all screws with tools gradually.
4. If the screws are not aligned with holes during assembly, please loosen all the other screws to 50% and continue the assembly process.
5. If the item is not stable, please loosen all the screws, adjust it on a flat ground and tighten up all screws again.
6. Note : If one or some screws are fully tightened during assembly, chances are the others will not be aligned with holes. In addition, all the holes are designed to be relatively larger to provide more space for the adjustment of the screws.

Exployed View

x2

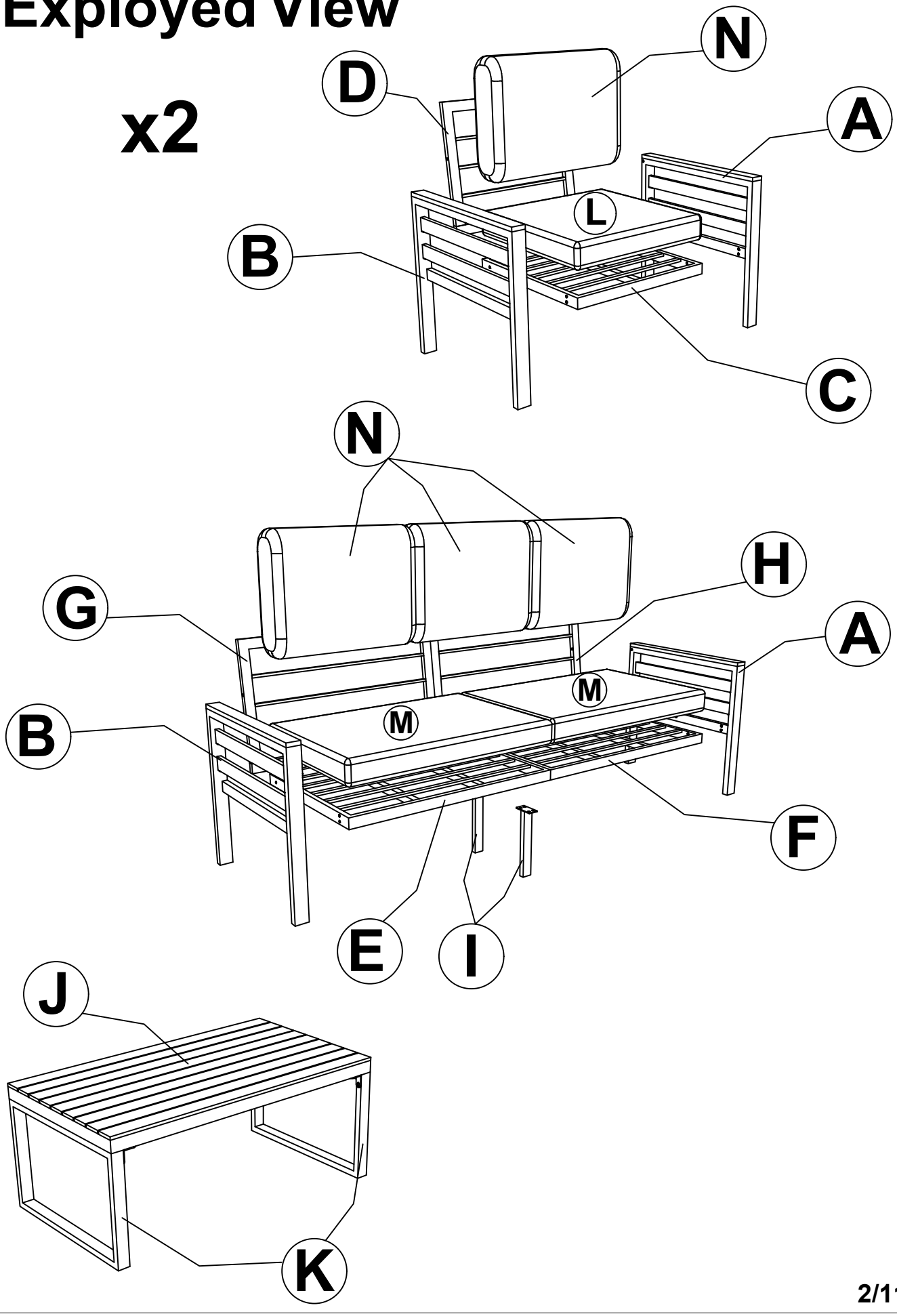

PART LIST

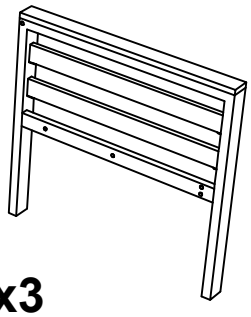

Ax3

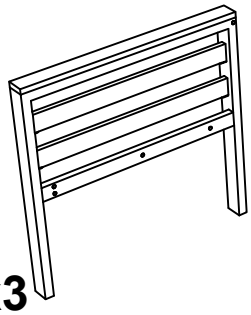

Bx3

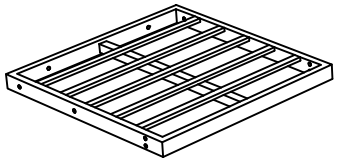

Cx2

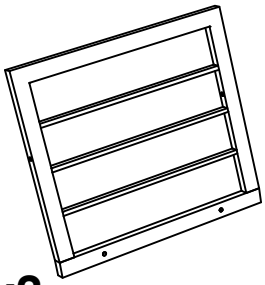

Dx2

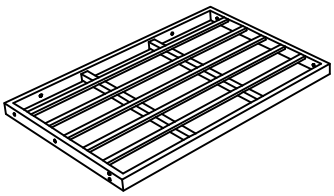

Ex1

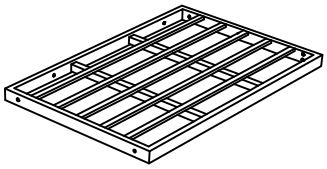

Fx1

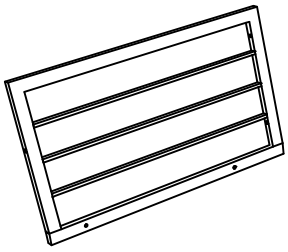

Gx1

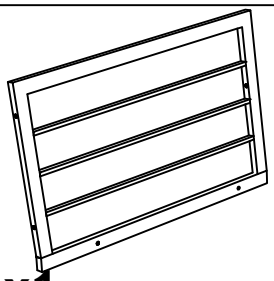

Hx1

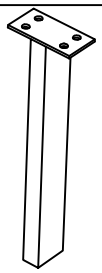

Ix2

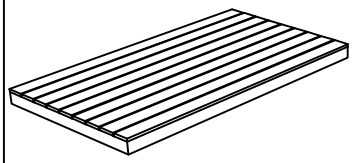

Jx1

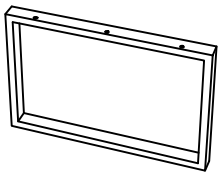

Kx2

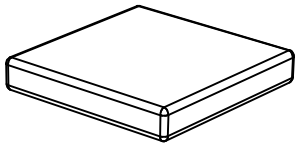

Lx2

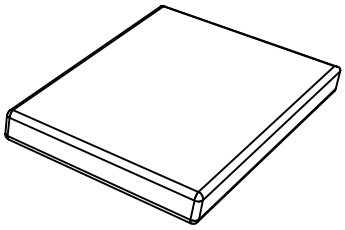

Mx2

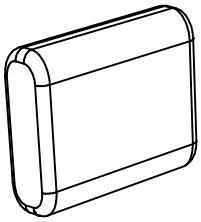

Nx5

HARDWARE LIST

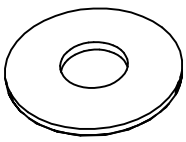

1- Washer : 64 pcs
Extra : 2 pcs

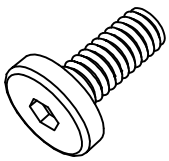

2- Bolt 6x15: 16 pcs
Extra : 2 pcs

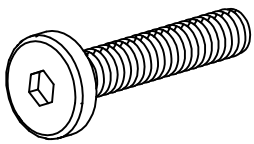

3- Bolt 6x35 : 40 pcs
Extra : 2 pcs

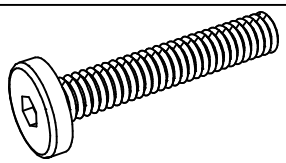

4- Bolt 6x55 : 8 pcs
Extra : 1 pc

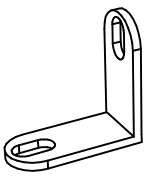

5- Bracket: 4 pcs



6- Allen key : 2 pcs

3/11

CARTON CONTENT :

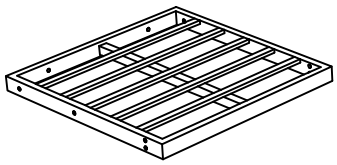

Cx2

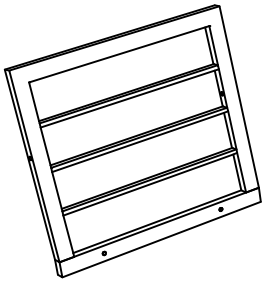

Dx2

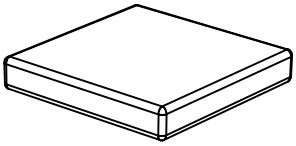

Lx2

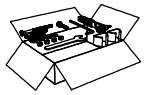

Hardware

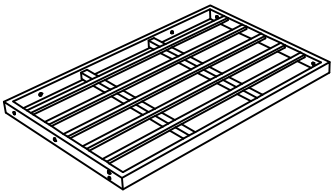

Ex1

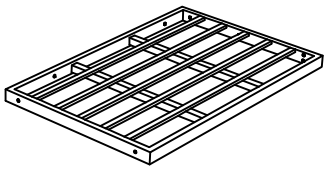

Fx1

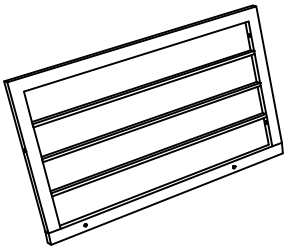

Gx1

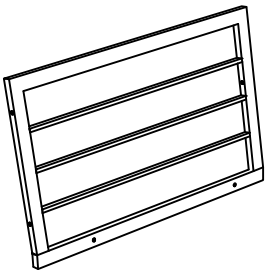

Hx1

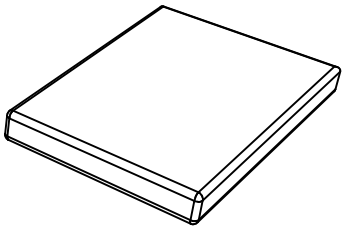

Mx2

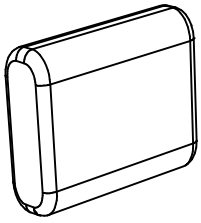

Nx2

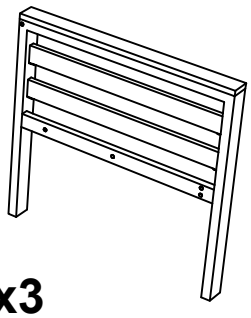

Ax3

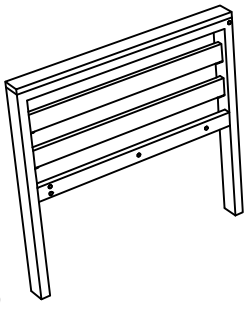

Bx3

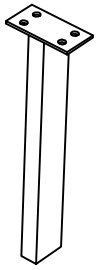

Ix2

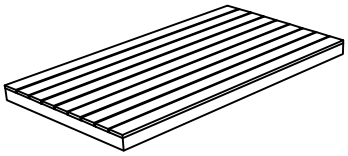

Jx1

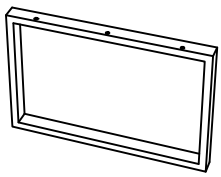

Kx2

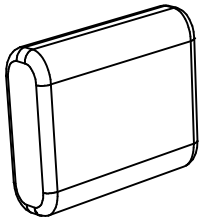

Nx3

Step 1

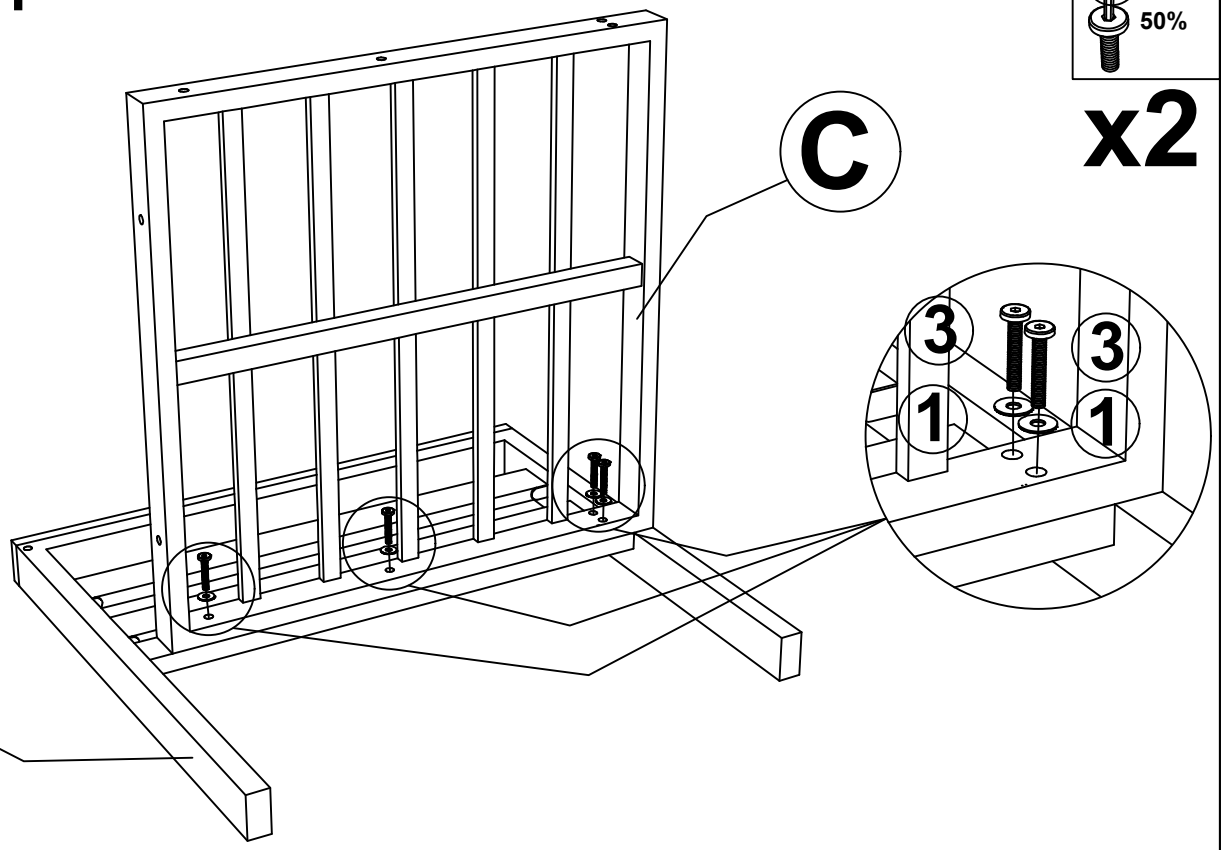

Ax1 Cx1 ①x4 ③x4

Step 2

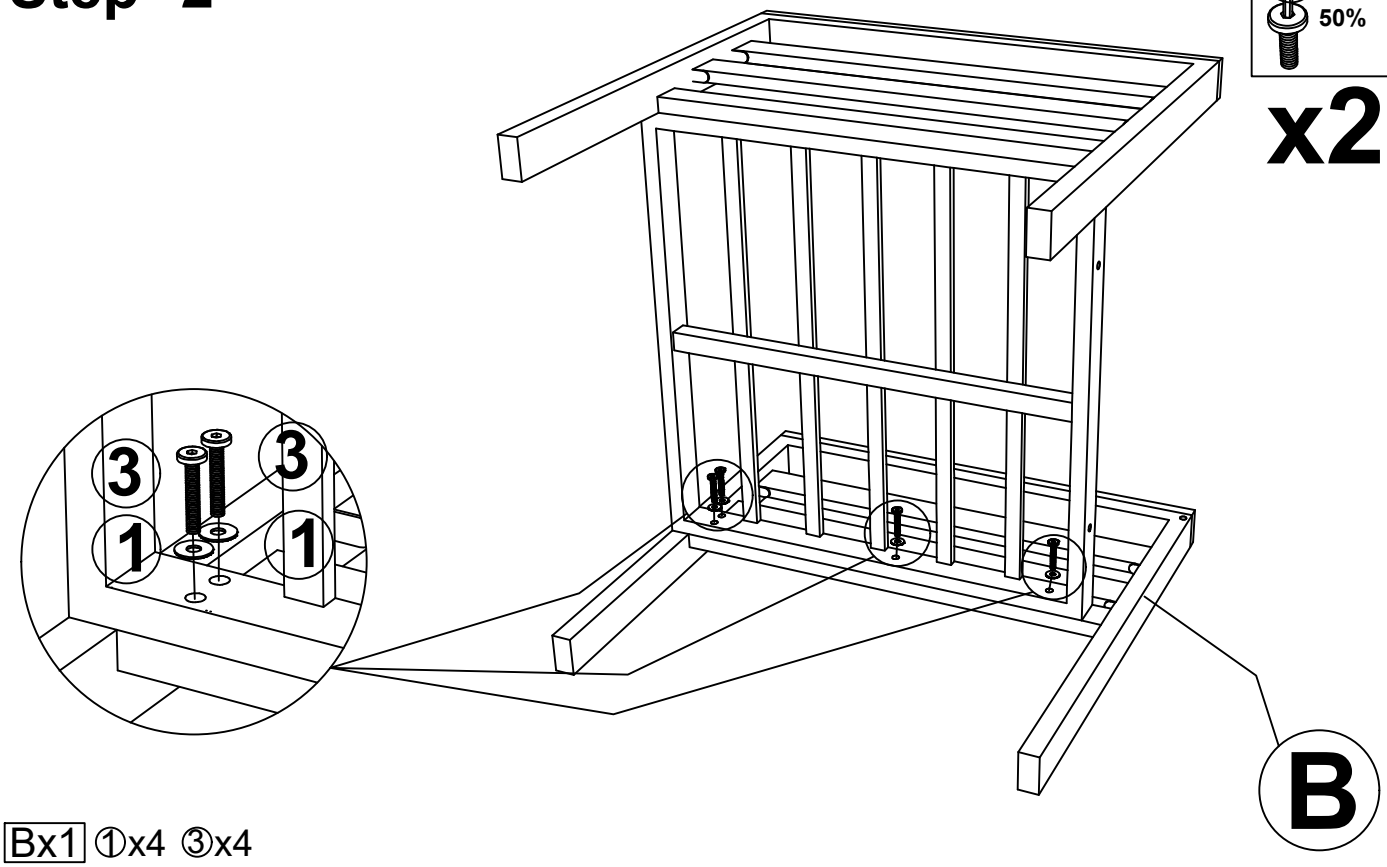

Bx1 ①x4 ③x4

Step 3

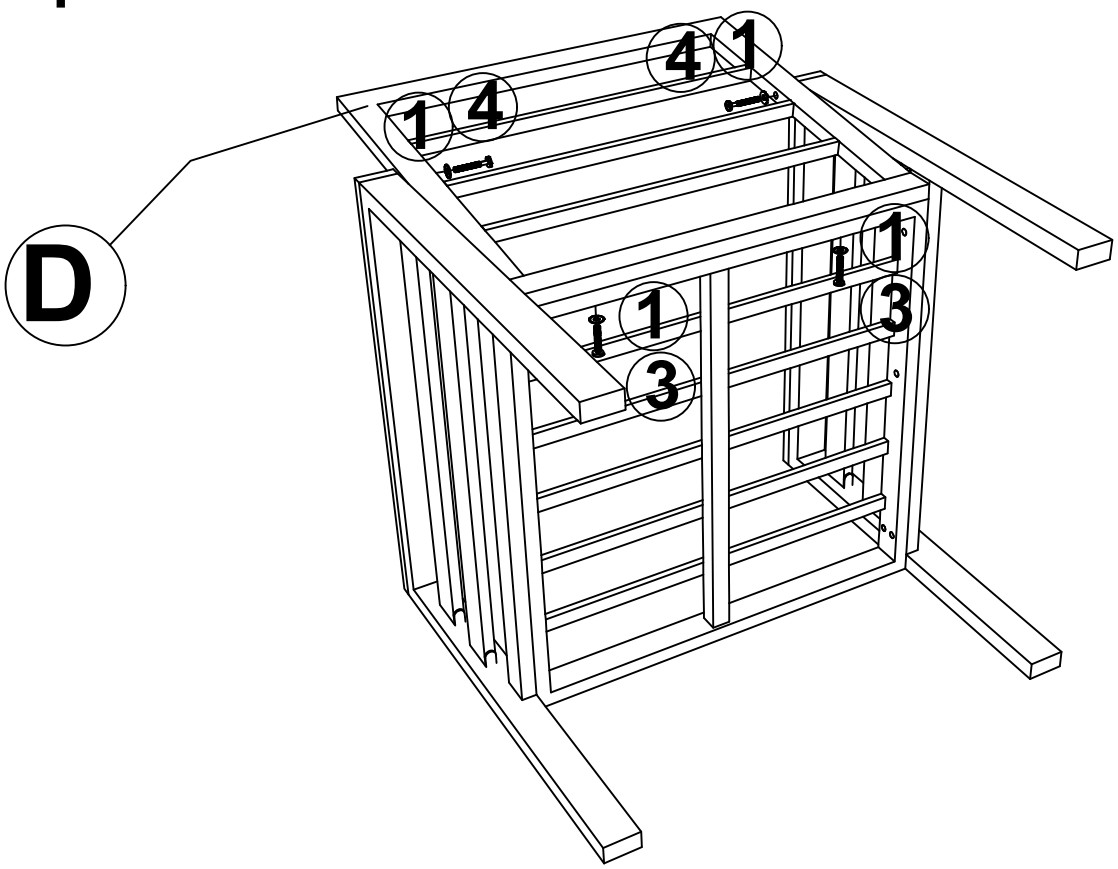

Dx1 ①x4 ③x2 ④x2

Step 4

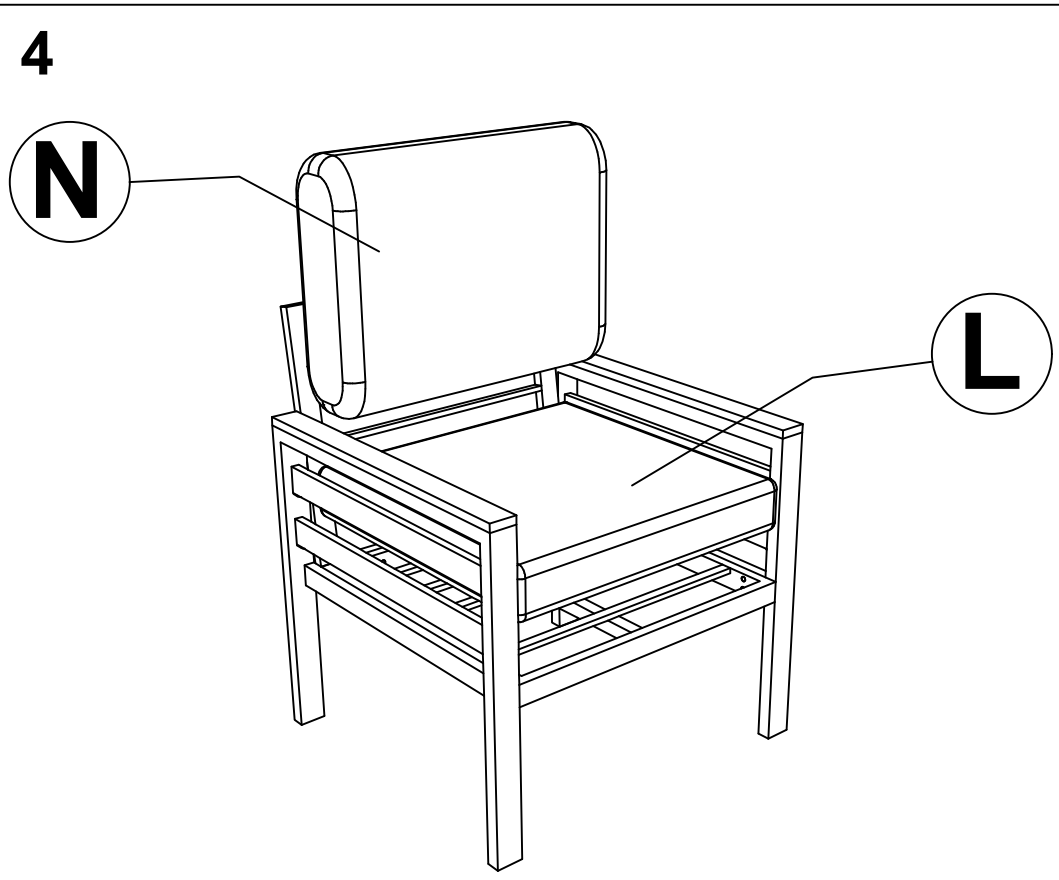

Lx1 Nx1

Step 5

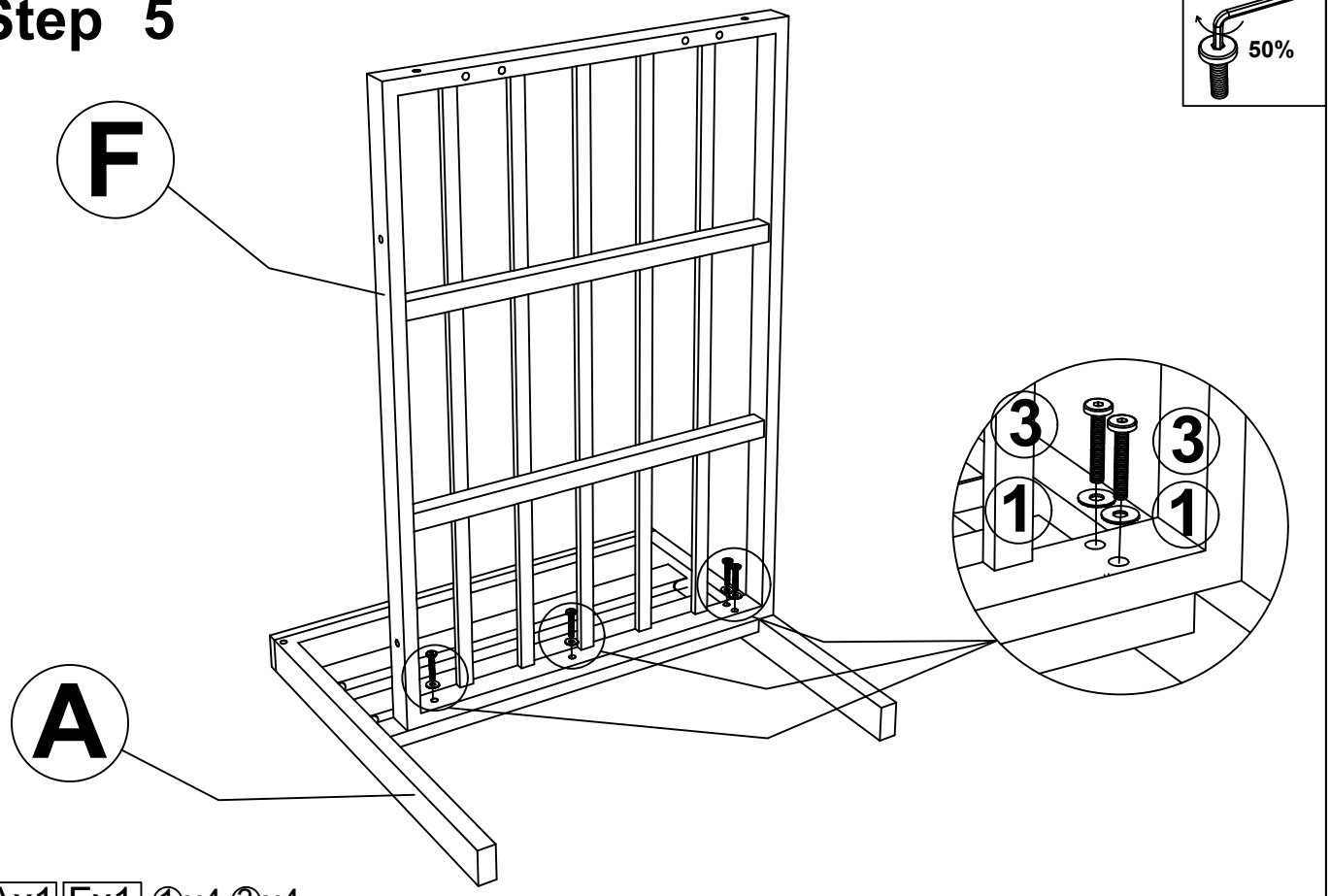

Ax1 Fx1 ①x4 ③x4

Step 6

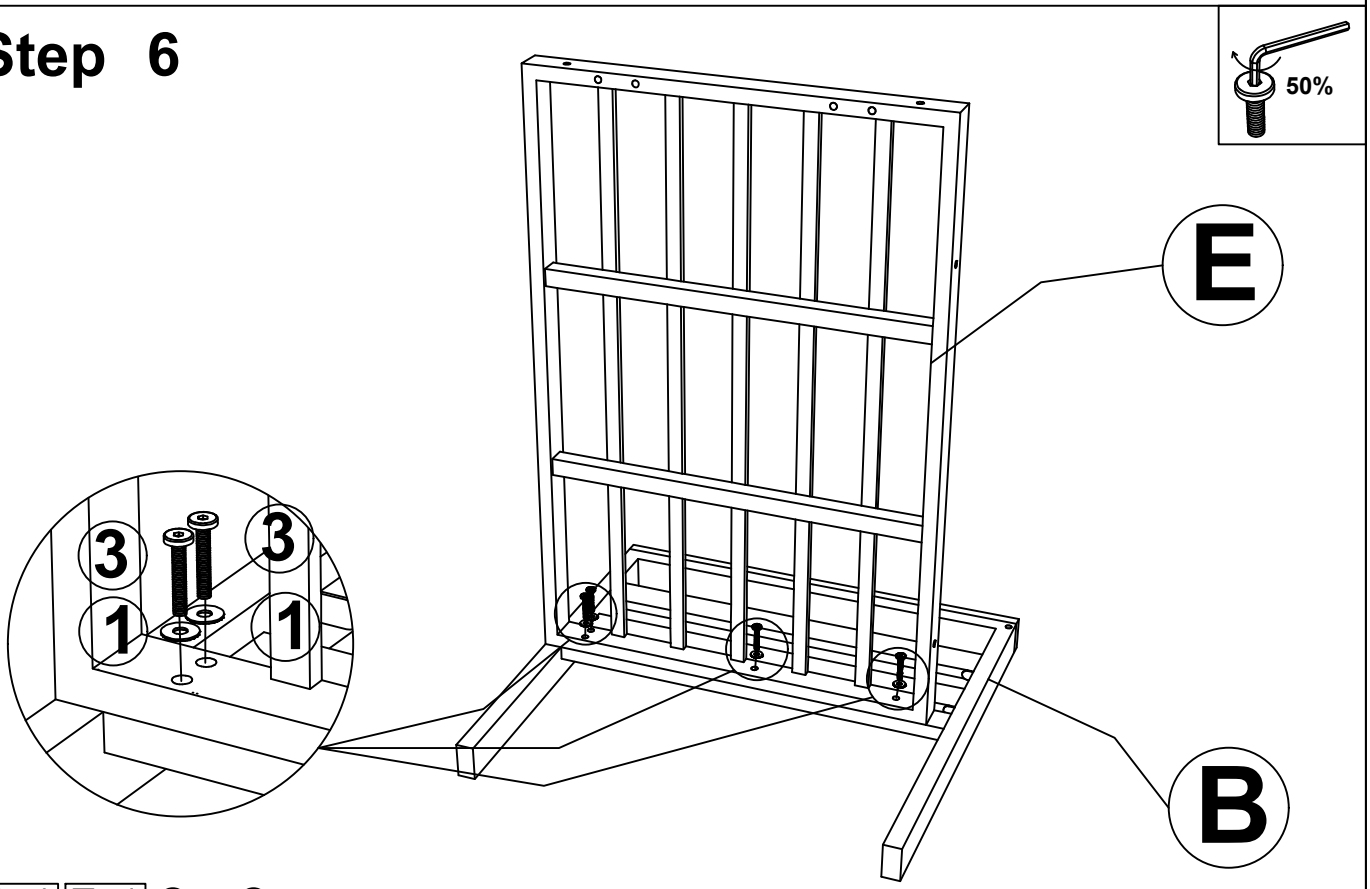

Bx1 Ex1 ①x4 ③x4

Step 7

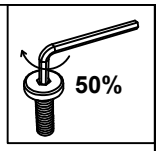

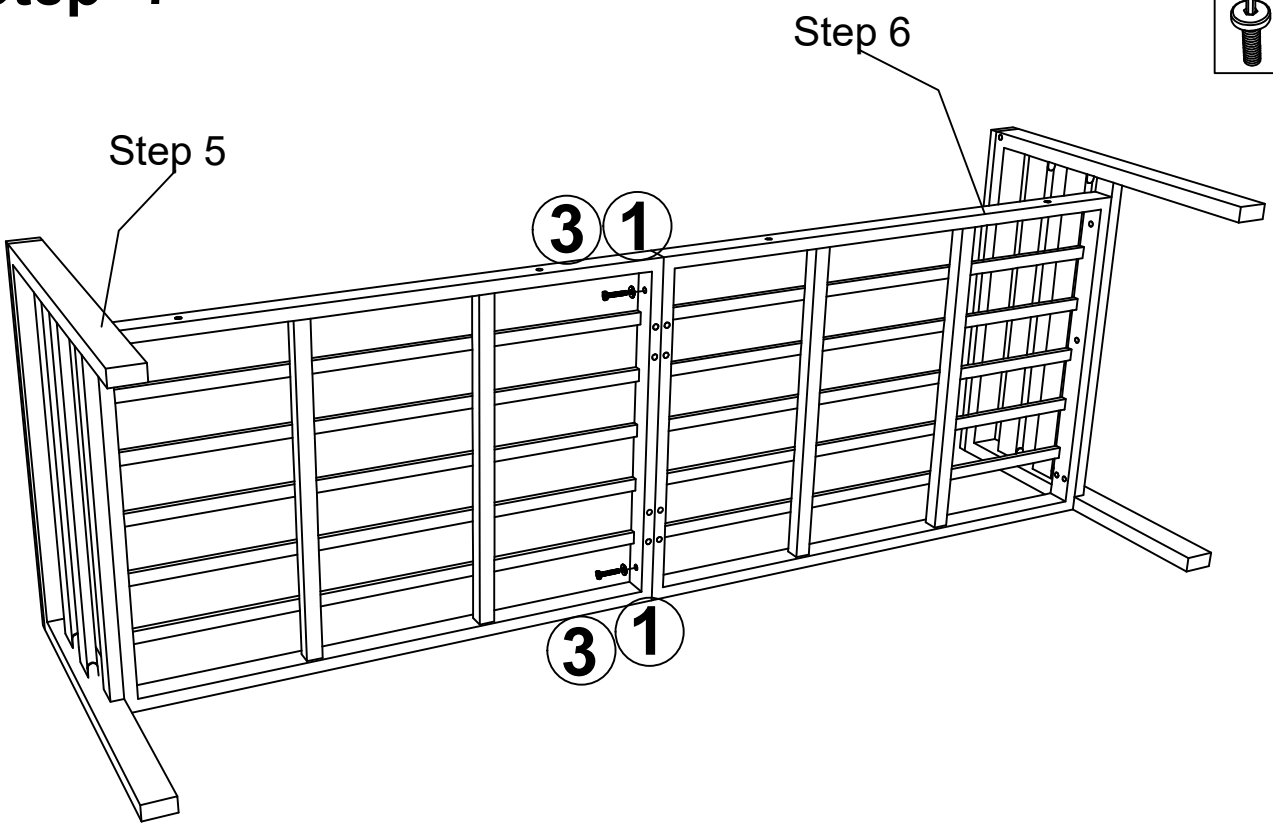

Step 5 Step 6 ①x2 ③x2

Step 8

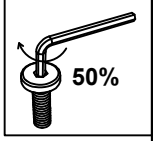

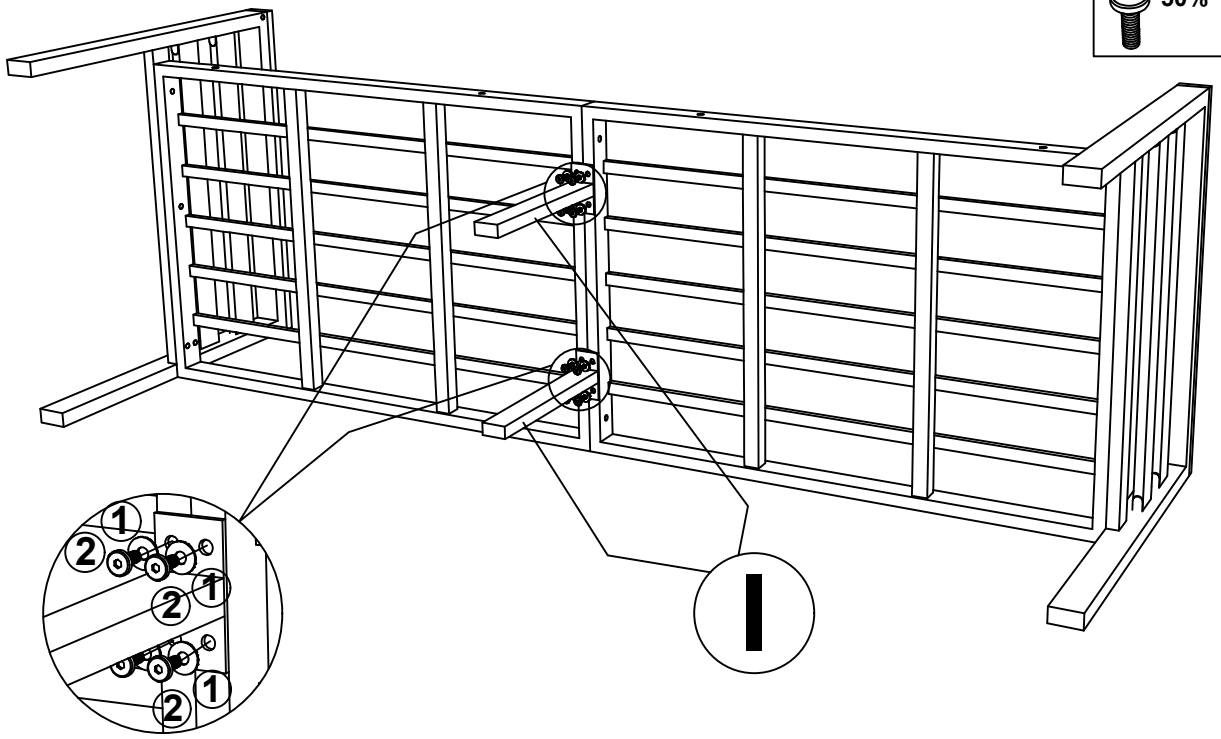

Ix2 ①x8 ②x8

Step 9

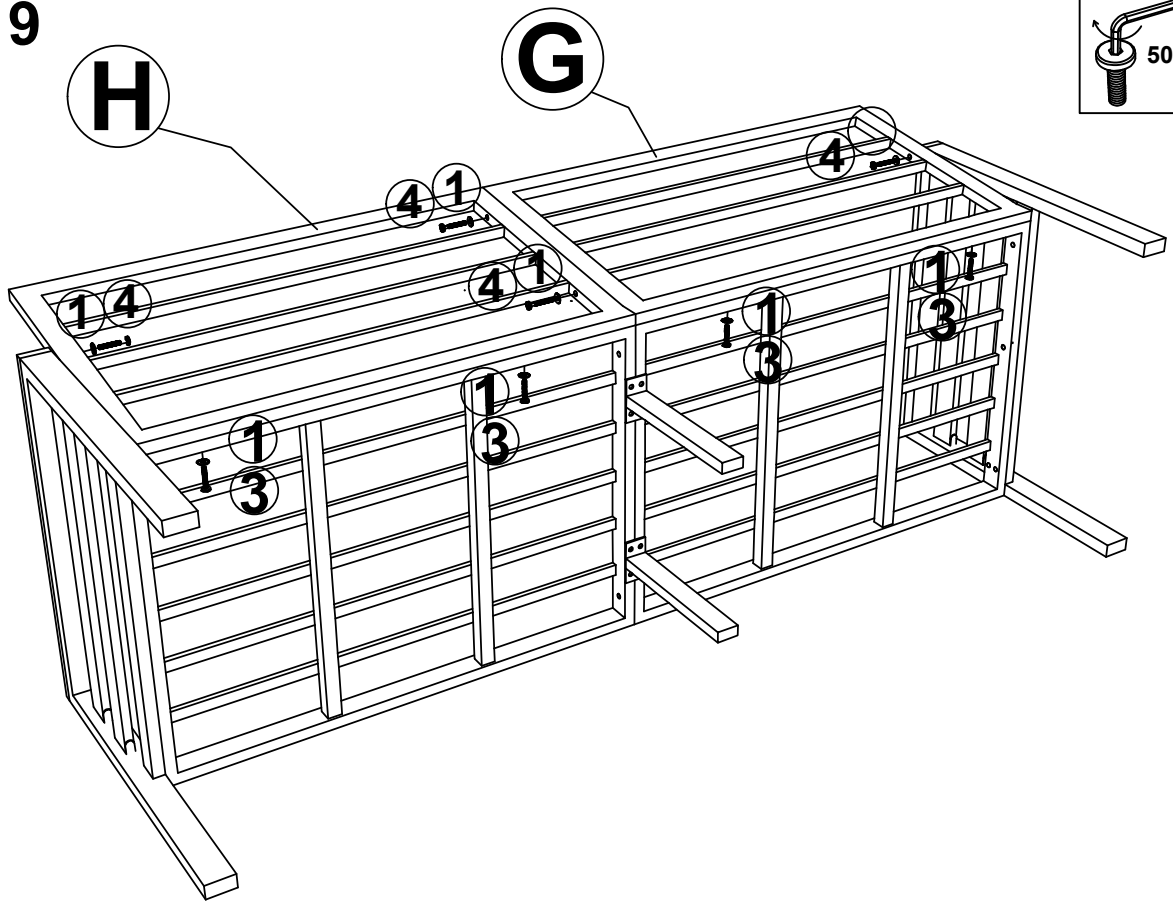

Gx1 Hx1 ①x8 ③x4 ④x4

Step 10

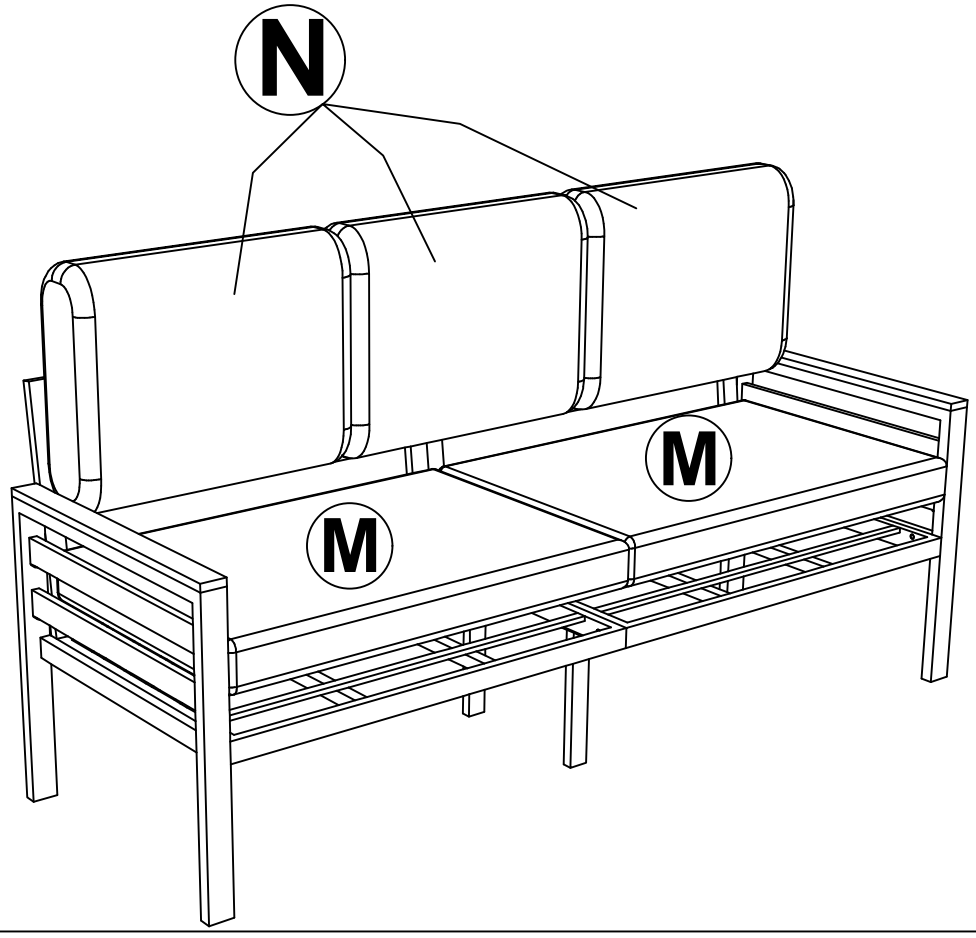

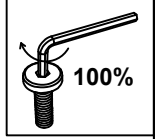

Mx2 Nx3

Step 11

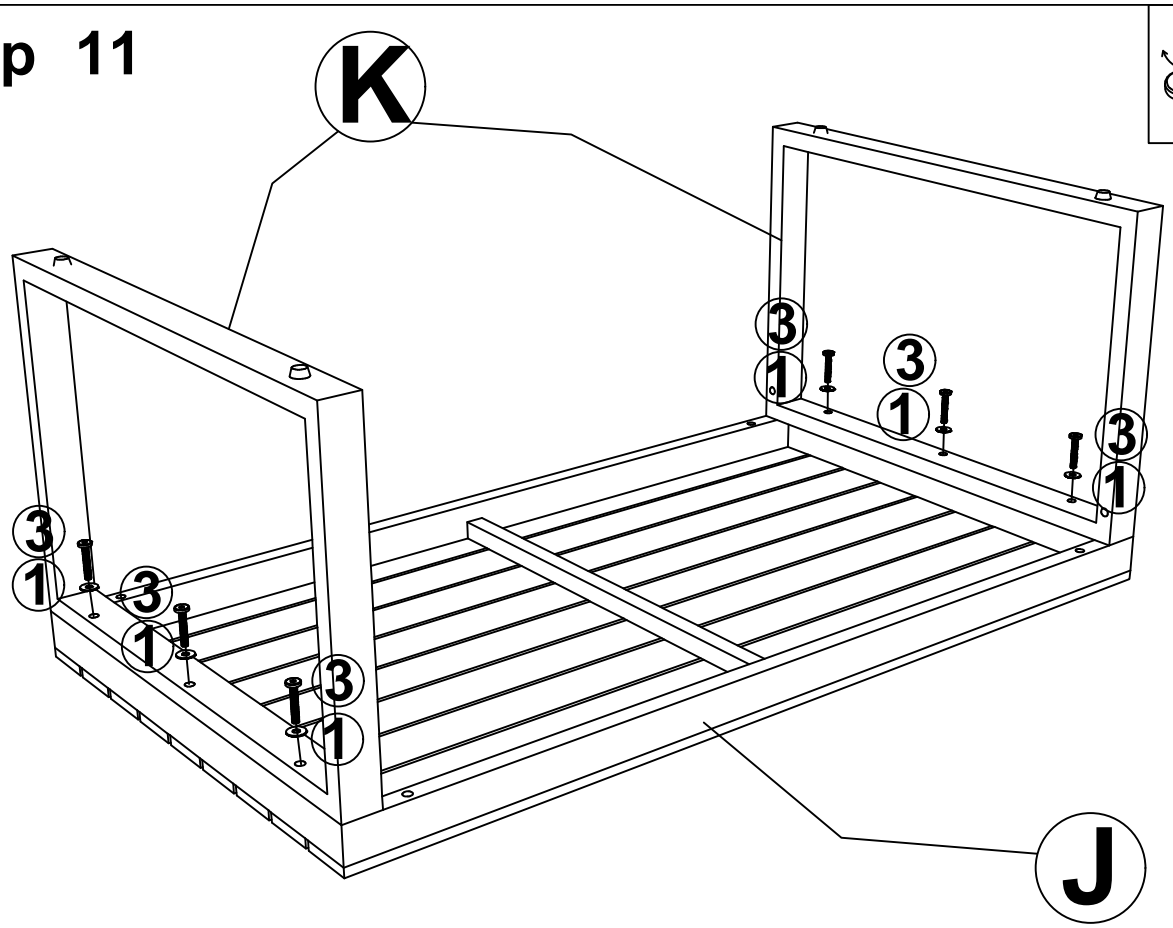

Jx1 Kx2 ①x6 ③x6

Step 12

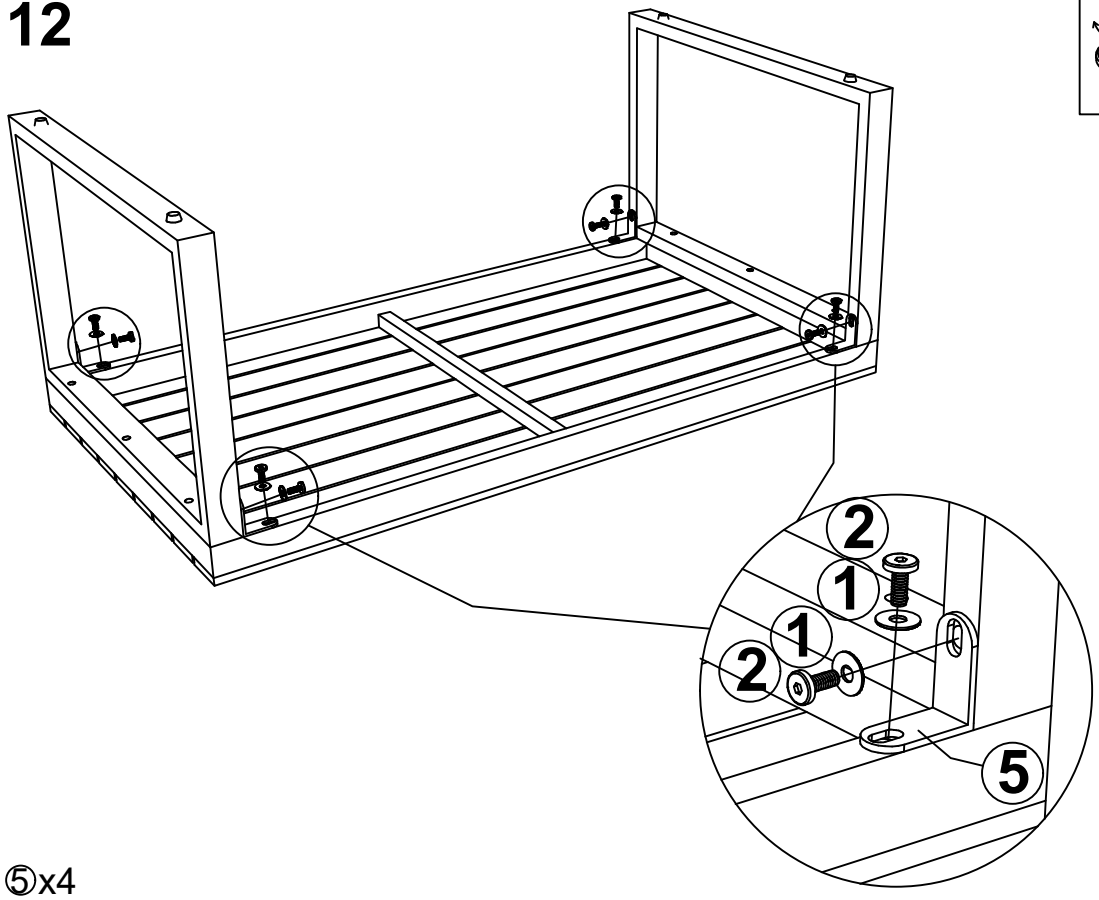

①x8 ②x8 ⑤x4

Step 13

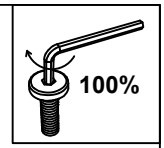

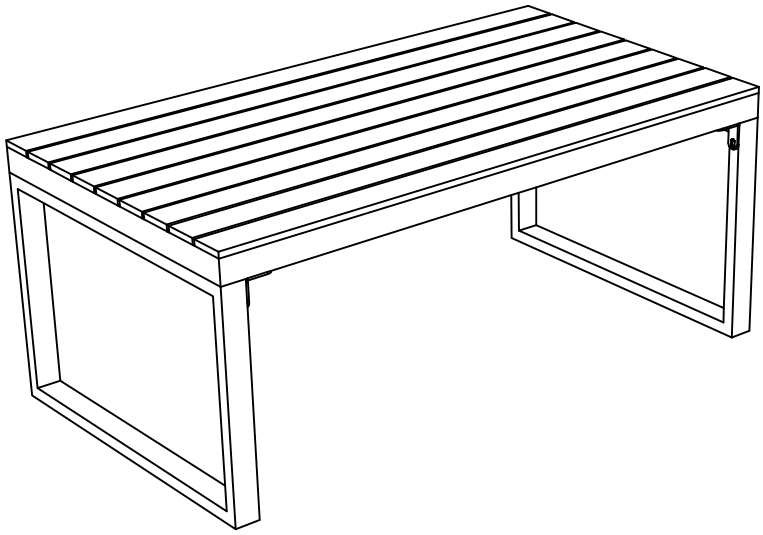

Step 14

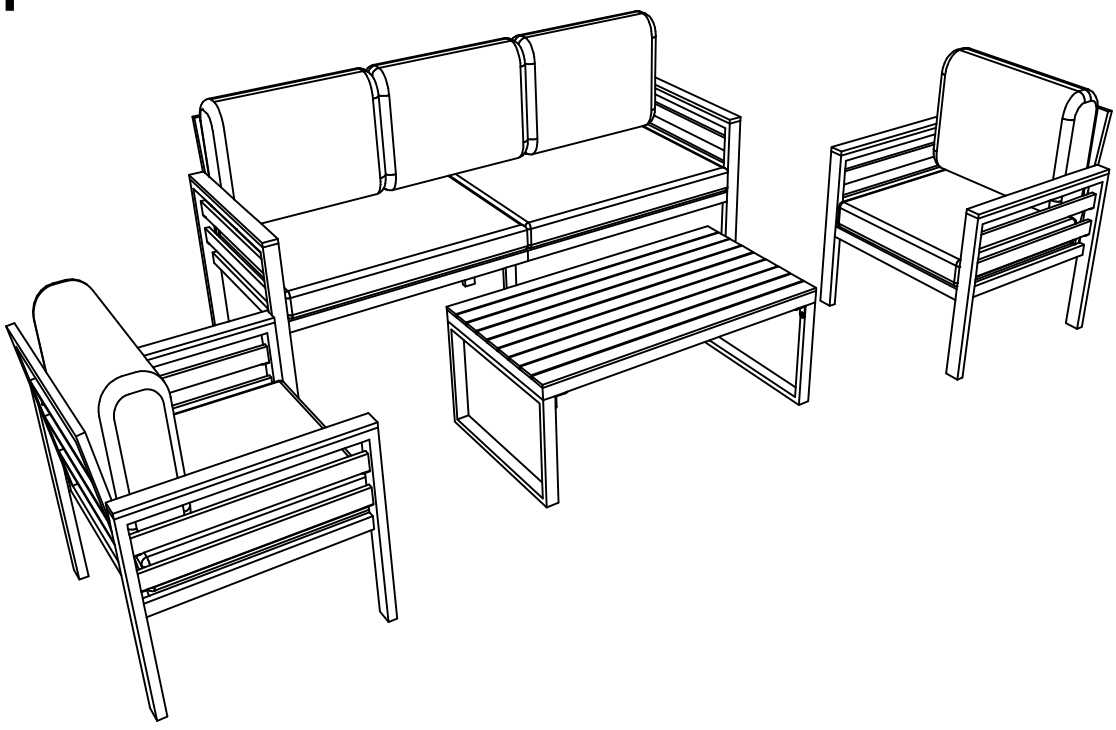

Finish